GOVERNMENT OF TAMIL NADU

HIGHER SECONDARY FIRST YEAR

VOCATIONAL EDUCATION

Basic Automobile Engineering

THEORY & PRACTICAL

A publication under Free Textbook Programme of Government of Tamil Nadu

Department of School Education

Untouchability is Inhuman and a Crime

AM_Unit_FM_Option.indd 1 12/20/2019 4:14:32 PM

Government of Tamil Nadu

First Edition - 2018

Revised Edition - 2019, 2020, 2021, 2022

Reprint - 2023, 2024

(Published under New Syllabus)

NOT FOR SALE

Content Creation

State Council of Educational Research and Training

© SCERT 2018

Printing & Publishing

Tamil NaduTextbook and

Educational Services Corporation

www.textbooksonline.tn.nic.in

0_XI_EM_EMPS_FM_2023.indd 2 26/12/2023 10:43:04

PREFACE

We take pride in presenting this text book on Basic Automobile Engineering Theory for the students of Higher Secondary and express our deepest gratitude to the learners, teachers and the SCERT for their enthusiastic support and response.

In the preparation of this text book enough care has been taken to introduce the fundamentals concepts to make the students to understand the subject, in addition to dispensing advanced topics to keep the students updated with the modern developments.

The interesting facts related to the subject are highlighted under "Do you Know" box item. Suitable activities have been suggested to the students to familiarise them with various components of the Engine and able to obtain sufficient practical exposure.

Activities are included at the end of each chapter to encourage the students to have an additional exposure in the process of learning. It is mainly to make the students to acquire analytical skills and improve their understanding and also to help them for the purpose of examination. Students are encouraged to learn the new topics from the related know old topics and to practice critical thinking to get innovative idea required for vocational education.

To facilitate further learning, reference books and websites have been suggested for each chapter. Suggestions and constructive criticism are most welcome to be duly considered and incorporated in future.

AM_Unit_FM_Option.indd 3 12/20/2019 4:14:32 PM

HOW TO USE THE BOOK

Learning Objectives: Learning objectives are brief statements that describe what students will be expected to learn by the end of school year, course, unit, lesson or class period.

Chapter Outline — Illustrate the complete overview of chapter



Amazing facts, Rhetorical questions to lead students to Automobile inquiry

Case Study — To encourage you, the role model students who studied in this group and achieved in various fields such as employment, self-employment and higher studies are mentioned in this case study.

Activity — Directions are provided to students to conduct activities in order to explore, enrich the concept.

Infographics — Visual representation of the lesson to enrich learning .

Evaluation — Assess students to pause, think and check their understanding



To motivate the students to further explore the content digitally and take them in to virtual world

Concept Map — Conceptual diagram that depicts relationships between concepts to enable students to learn the content schematically

Career corner — List of professions related to the subject

References — List of related books for further details of the topic

Web links — List of digital resources

Glossary — Explanation of scientific terms

Competitive Exam questions — Model questions to face various competitive exams

AM_Unit_FM_Option.indd 4 12/20/2019 4:14:32 PM

AM_Unit_FM_Option.indd 5



Career Guidance

Vertical Mobility		Horizontal Mobility	
Engineering	***Arts***	**Employments**	**Self-Employment**
1. Directly to Join 2nd year Diploma Engineering in Government Aided and private polytechnics and select any other major Engineering course. 2. 10% of the Seats are allotted to Government and Government Aided and Private Engineering colleges to Join Ist year graduate engineering. 3. Distance Education Directly under go the course AMIE which is equal to Government Engineering Courses. Maximum Duration Six years.	1. +2 Vocational Groups Student are eligible to Join Ist year Diploma Teacher Training Course. 2. Directly Join B.A. Arts Group Except – Physic Chemistry, Biology major all other science group. 3. Directly Join B.Sc Math's group.	1. Directly Join to Reputed Industries as Apprentice Training/Factory Training like a) Ashok Leyland. (Chennai and Hosur) b) TVS Groups. (Chennai, Hosur, Madurai, etc.) c) Simpson Engineering Groups. (Chennai, Hosur, Redhills, etc.) d) Hyundai Car Company. (Sriperumbudar, Irrangatukdtai, Chennai) e) Ford India Ltd. (Maraimalai Nagar) f) All Reputed Service centers like TVS, VST and Hyundai, Ford etc. g) All Automobile leading manufacturing, repairing and servicing centers.	1. Vocational Students after getting Apprentice Training Industry Training are eligible to get small scale Industry Loan from Hudco, TIDCO, SIDCO etc. 2. After Adequate required experience in the field getting they are eligible to minimum loans under the scheme of a) NRY (Nehru Rozhar Yogana) b) PMRY (Prime Minister Rozhar Yogana) c) TRYSEM (Training for Rural Youth and Self Employment) d) PMKVY (Pradhan Mantri Kaushal Vikas Yojana)

12/20/2019 4:14:32 PM

CONTENTS

BASIC AUTOMOBILE ENGINEERING

Unit No.	Chapter Title	Page No.	Month
1.	Safety Rules	1-18	June
2.	Instruments and Measurements	19-52	June-July
3.	Fuels and their Types	53-65	July
4.	History of Automobiles	66-76	August
5.	Engine	77-114	August
6.	Intake, Exhaust System and Combustion Chamber	115-138	September
7.	Cooling System	139-156	October
8.	Engine Lubrication System	157-172	October
9.	Fuel Supply System	173-198	November
10.	Engine Trouble Shooting and Remedies	199-218	December
	Case Studies	219-225	
	Model Question Paper	226-229	
	References	230-231	
	Common Glossary	232	
	Basic Automobile Engineering Practical	233-271	

D5RH7

E-book

R6ZJF

Assessment

AM_Unit_FM_Option.indd 6 12/20/2019 4:14:32 PM

Unit 1 Safety Rules

Contents

1.0 Introduction
1.1 Workshop Safety Rules
1.2 Self-Safety
1.3 Safety Precaution in Machines
1.4 Safety Precaution in Using Tools
1.5 Road Safety
    1.5.1 Mandatory Signs
    1.5.2 Cautionary Signs
    1.5.3 Informatory Signs
1.6 Vehicle Safety
    1.6.1 Warning Indicator used in Vechicles
        1.6.1.1 Seat Belt Alarm System
        1.6.1.2 Headlight Alarm System
        1.6.1.3 Reverse Parking Sensor
        1.6.1.4 Anti-Theft Car Alarm
1.7 Safety Devices
    1.7.1 Air Bag
    1.7.2 Anti-Lock Braking System
    1.7.3 Automatic Door Lock
    1.7.4 Steering Wheel Lock
1.8 First Aid
1.9 Important Things to Notice
1.10 If Dust Falls on Eye
1.11 Procedure to Handle Vehicle During Emergency



AM_Unit_01.indd 1 12/20/2019 4:19:06 PM

Learning Objectives

- To learn the relief procedure in case of emergency situations to the living beings.
- To learn the road safety rules.
- To learn the handling of tools and equipments in the workshop.

1.0 INTRODUCTION

Safety rules are necessary to ensure owners and employees not to injure themselves or customers during operation in machines. Perfection is required before doing the job, during the job and after doing the job. For perfection in work, an operator should know the handling of machine and equipment in a safe manner. For example, a welder can use goggles to protect the eyes from the heat and ultraviolet radiation produced by the welding. Other safety devices can be used depending upon the job. Such procedures to use proper safety in devices and operation is called as safety rules. The following are the classification of safety rules depends on the place of work.

1. Safety in Shop floor
2. Self-Safety
3. Safety in Machines
4. Safety in Tools
5. Road safety rules
6. Vehicle safety rules

1.1 WORKSHOP SAFETY RULES

The following rules have been followed in the workshop to ensure the safety of all employees while operating machines. The majour safety equipments are shown in Fig 1.1.

1. Always wear helmet and shoe in the workshop.
2. Always walk on the designated path.
3. Don't talk or distract the other employees during work.
4. Without prior notice, do not disconnect or connect an electrical connection.
5. Operate the machine after proper training and permission from authorities.
6. Keep the tools in their designated places only.
7. Keep the board "Under Fault" in the faulty machines.
8. Keep the first aid box at appropriate places
9. Use appropriate dress code inside the work premises.
10. When working with machine tools or other equipment with rotating spindles, watches, rings, jewellery, loose clothing etc., are prohibited and long hair must be completely covered.
11. Use proper material handling equipments to transfer raw material.
12. Maintain clean and hygiene canteen, water and restrooms.
13. An operator should not operate the machine continuously for more than 8 hours. Provide break at the specified intervals.

AM_Unit_01.indd 2 12/20/2019 4:19:06 PM

14. Don't allow an ill operator to operate the machine.
15. Exit path should be clearly marked and the pathway should be kept clear of any obstacles.
16. All the safety rules and procedures should be meticulously followed by all the employees.



Figure 1.1 Safety Equipments

1.2 SELF-SAFETY

An operator should prepare himself to do the work correctly, effectively within the stipulated time. This preparation will prevent the operator from accidents and such safety measure is called as self-safety. Figure 1.1 shows self-safety items and Figures 1.2 and 1.2(a) show their practice. The following are self-safety rules and should be followed.

1. Always wear fit clothes.
2. Don't have long hair.
3. Always wear shoe.
4. Operate a machine tool after getting proper training.
5. Sharp tools should be kept only at the designated place.
6. Handle sharp tools with proper safety wear.
7. Operate the machine/vehicle after pre – checkup.
8. Don't wear watches, rings during work.
9. Wear a helmet while travelling on a two-wheeler. Wear a seat belt while travelling in the car.



Figure 1.2 Self-Safety in Work Place

AM_Unit_01.indd 3 12/20/2019 4:19:07 PM





Figure 1.2(a) Wear Fit Cloths in Self-Safety

10. Avoid having food, chats in the workplace.
11. Ensure proper lighting and ventilation at the workplace.
12. Don't work with illness.

1.3 SAFETY PRECAUTION IN MACHINES

The following are the safety rules to be followed before the process, during the process and after the process. Refer Figures 1.3, 1.3(a) and 1.3(b).

1. Don't lean on the machine during its working.
2. Operate the machine after ensuring the working condition of the machine.
3. Equipment should be used with proper safety guards, especially for rotating parts.
4. Ensure proper grease and lubrication oil before the start of any operation.
5. Stop the machine, if an unusual sound is heard.
6. Lubrication should be made periodically.

AM_Unit_01.indd 4 12/20/2019 4:19:08 PM

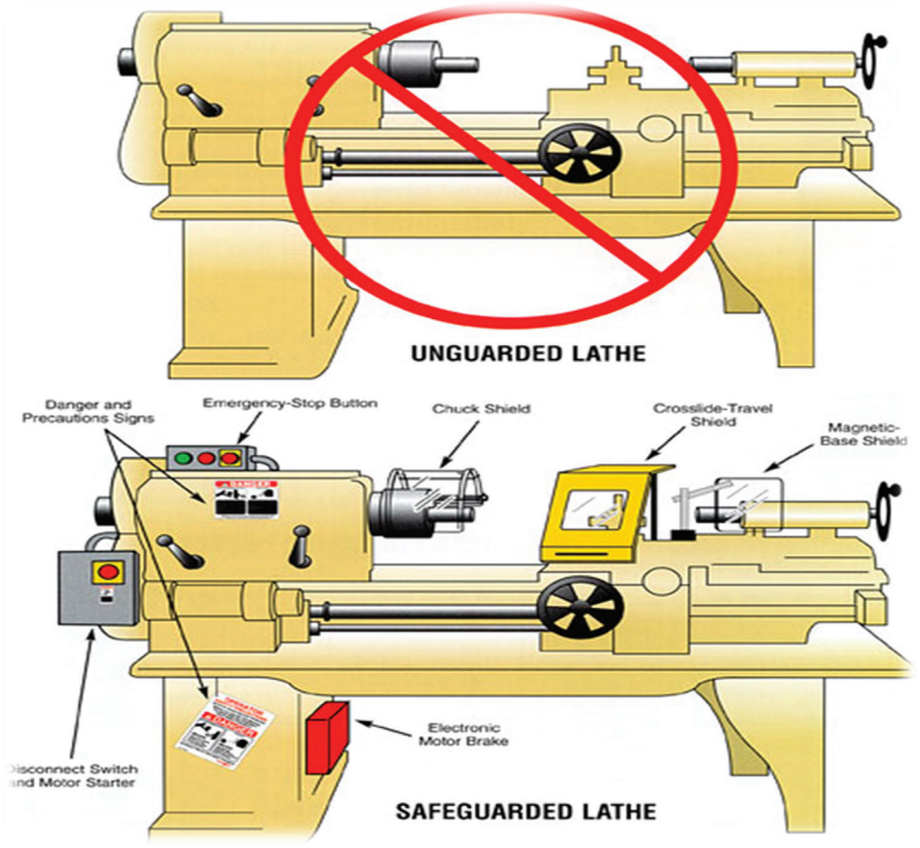

Figure 1.3 Safety Precaution in Machines

7. Operate the new machine after understanding its operation.
8. Lay proper foundation based on speed, weight and its operating features.
9. Don't service the machine during its operation.
10. Clear visible note should be attached to the machine when it is out of order.



Figure 1.3 (a) Safety Precaution in Machines

AM_Unit_01.indd 5 12/20/2019 4:19:09 PM

Grinder Safety (cont)

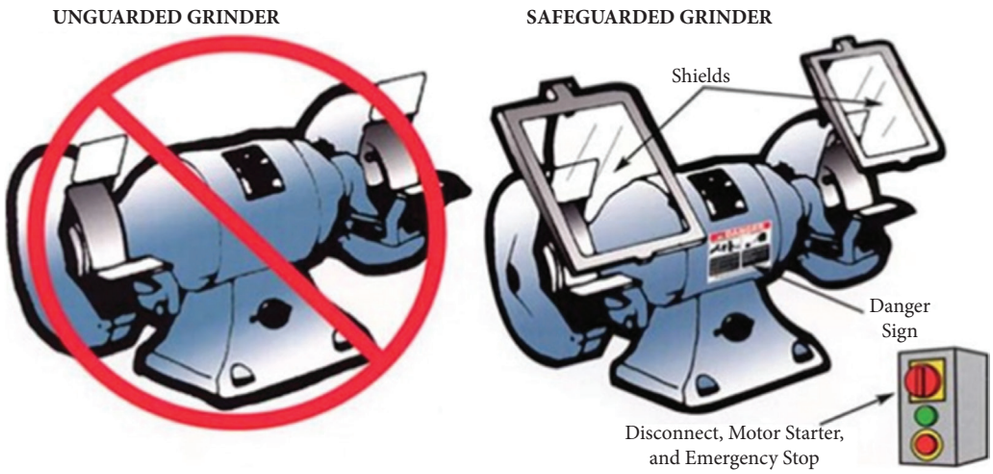

Figure 1.3 (b) Safety Precaution in Machines

1.4 SAFETY PRECAUTION IN USING TOOLS

Hand tools are a common part of our daily work lives. Hand tools like Hammers, wrenches, chisels, pliers, screwdrivers etc., may look harmless, but they are the cause of many injuries. These injuries can be serious, including loss of fingers or eyesight. Hence proper safety measure should be taken while in use. Refer Figures 1.4 and 1.4(a).

1. Use files, chisels or other hand tools with proper handle.
2. Use appropriate coolants during cutting operation.
3. Keep the sharp tools securely in their protective covers before and after use.
4. Select and Use the right tool for the job. Substitutes increase the chance of having an accident. For example, Don't use a wrench as a hammer, screwdriver as a chisel, file as lever etc.,
5. Don't over tight the hacksaw blade.
6. Always provide training on how to choose the right tool for the job, how to correctly use each tool, and how to identify when tools need repair.
7. Use good quality tools and Keep tools in good condition at all times. Inspect tools for defects before use. Replace or repair defective tools.
8. Carry tools in a sturdy toolbox to and from the worksite.
9. Wear safety glasses or goggles, or a faceshield (with safety glasses or goggles)



Figure 1.4 Safety Precaution in Using Tools

AM_Unit_01.indd 6 12/20/2019 4:19:10 PM



Chips or dents on face | Mushroom face | Crack in claw section | Dents in hammer handle

Figure 1.4(a) Safety Precaution in Using Tools

and well-fitting gloves wherever required.

10. Do not apply excessive force or pressure on tools.
11. Do not use tools during electrical work unless they are designed for electrical work (e.g., properly insulated).
12. Keep the workspace clean and tidy. Store tools properly when not in use.

1.5 ROAD SAFETY

Road safety refers to the methods and measures that are used to prevent road users from being killed or seriously injured. Typical road users include: pedestrians, cyclists, motorists, vehicle passengers and passengers on public transport mainly buses. Shown in Figure 1.5 and 1.5(a).

The following are basic road safety rules.

1. Pedestrians should walk on the footpath.
2. Use subway or foot over bridge to cross the road.
3. Use separate lane for the cyclist, low-speed vehicle, high-speed vehicle and trucks.



Figure 1.5 Road Safety

AM_Unit_01.indd 7 12/20/2019 4:19:11 PM



Figure 1.5(a) Road Safety

4. Ensure proper drainage of rainwater during the rainy season.
5. Usage of barricades to prevent animals running on roads.
6. Obey traffic signals especially at junctions.
7. Laying of speed breaker at school zones / crossing roads.
8. Sharp curve warning signal by the signboard.
9. An indication of bridges, narrow roads through sign boards.
10. An indication of hospitals, tollgate, fuel bunk, airport, railway station, unmanned level crossing etc., at appropriate places through signboards.



What Is the 5S System?

5S is the name of a work-place organization method that uses a list of five Japanese words: seiri, seiton, seiso, seiketsu, and shitsuke. In English, these words are often translated to Sort, Set in Order, Shine, Standardize and Sustain.

5S system is a lean manufacturing tool that improves workplace efficiency and eliminates waste. Managers and workers achieve greater organization, standardization, and efficiency-all while reducing costs and boosting productivity.



AM_Unit_01.indd 8 12/20/2019 4:19:11 PM

1.5.1 Mandatory Signs

Mandatory signs are road signs which are used to set the compulsions of all traffic which use a specific area of road. Mandatory signs tell traffic what it must do. Most mandatory road signs are circular a white background with a red symbol or white symbols on a blue background with white border. The violators are punishable under law. Shown in Figure 1.5.1.

Some of the mandatory signs are given below.



Figure 1.5.1 Mandatory Signs

AM_Unit_01.indd 9 12/20/2019 4:19:12 PM

1.5.2 Cautionary Signs

These signs are used to alert and warn the driver to understand the upcoming road condition. These symbols are black in colour within the red triangle on white background. Shown in Figure 1.5.2.

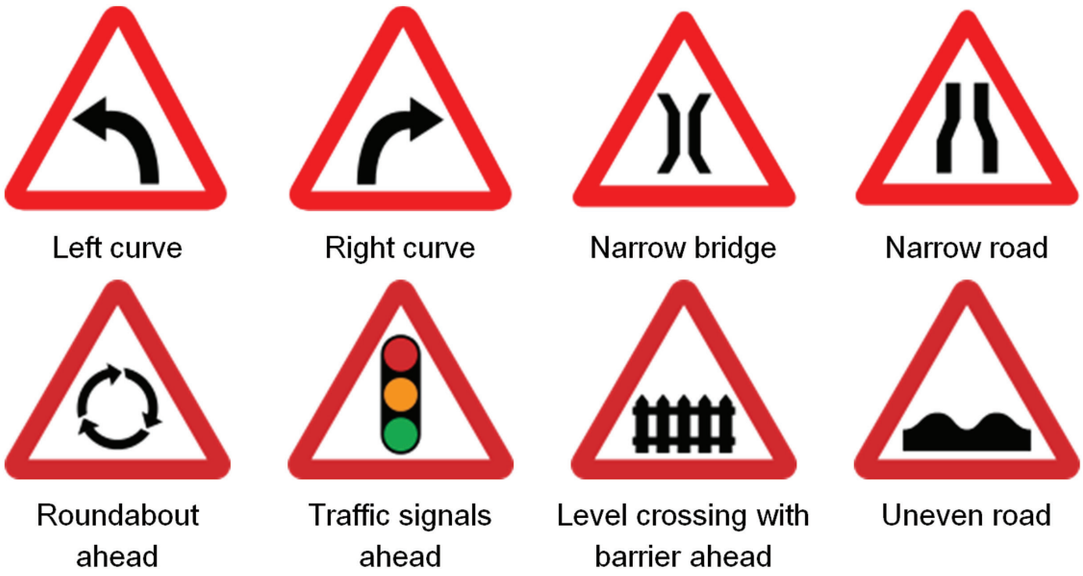

Figure 1.5.2 Cautionary Signs

1.5.3 Informatory Signs

Informatory signs are used to indicate the location, direction and distance of fuel bunk, hospital, toilet, alternative path etc., to the driver. This symbol is located along the direction of travel. They are square in shape. Shown in Figure 1.5.3.



Figure 1.5.3 Informatory Signs

AM_Unit_01.indd 10 12/20/2019 4:19:12 PM

1.6 VEHICLE SAFETY

At present, usage of the vehicle is highly mandatory. Further, people are travelling a large distance in a shorter time. Hence, they are using their own vehicle to travel at the required place without using the public transport. It would be highly beneficial for the vehicle owner if they understand the condition of their vehicles or else the vehicle may breakdown during the travel. To avoid vehicle breakdown, to safeguard the people travelling, safety and warning devices are installed. Situations like vehicle theft, an accident during reversing the vehicle, on the four road junctions etc., can be avoided with the help of warning devices. This is called as Vehicle safety. Shown in Figure 1.6.

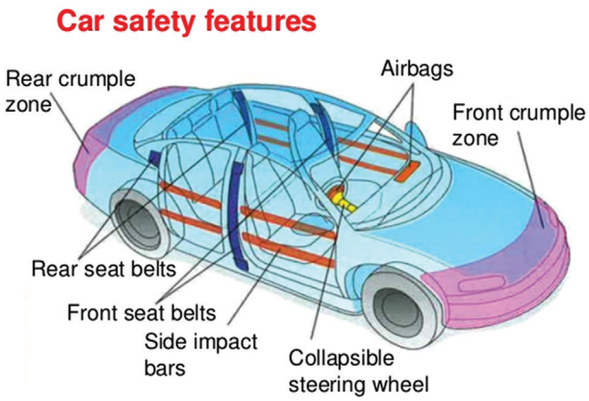

Figure 1.6 Vehicle Safety

1.6.1 Warning Indicator Used In Vehicles

The following indicators are used to indicate operating condition of engine and vehicle with the help of gauges and warning symbols. Shown in Figure 1.6.1.

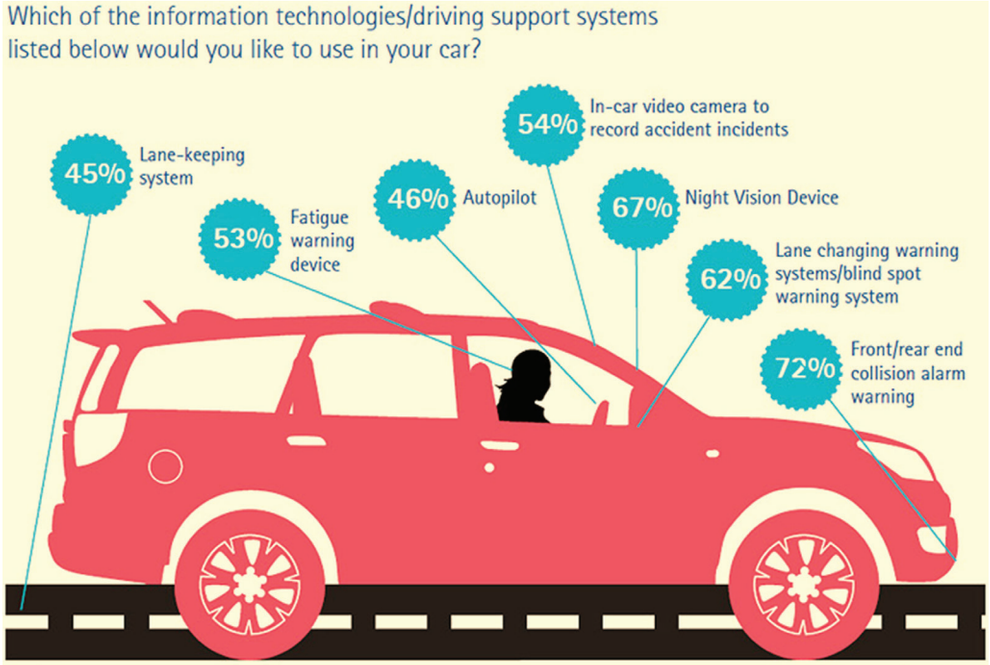

Figure 1.6.1 Warning Indicator used in Vehicles

AM_Unit_01.indd 11 12/20/2019 4:19:13 PM

1. Lubricating Oil Pressure Gauge
2. Engine Temperature Gauge
3. Fuel Gauge
4. Door Open Signal Indicator
5. Handbrake signal indicator

The following indicators are used to alert the driver through sound with the help of buzzer.

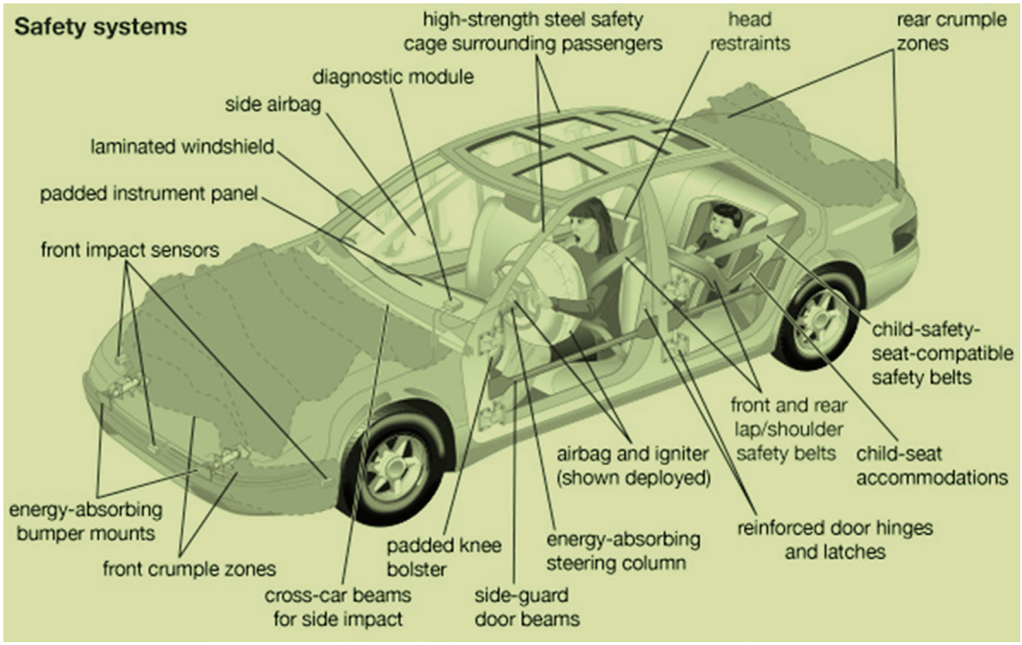

Figure 1.6.1.1 Seat Belt Alarm System

1.6.1.1 Seat Belt Alarm System

One should wear a seat belt while driving. If a driver or person forgets to wear the seat belt, then it will alert the driver. Shown in Figure 1.6.1.1.

1.6.1.2 Headlight Alarm System

Most modern vehicles have inbuilt headlight alarms or automatic headlight switch off functions. Sounds an audible alarm when the ignition is turned off while the head lights are turned on.

1.6.1.3 Reverse Parking Sensor

Parking sensors are proximity sensors for road vehicles designed to alert the driver to obstacles while parking. Car Parking Sensor suitable for parallel parking, backing up your car, distance keeping, especially in dark, rain or any other poor rear visibility conditions.

1.6.1.4 Anti-Theft Car Alarm

Anti-theft systems are designed to prevent your vehicle from being stolen. It generates a loud alarm when there is a theft attempt. When the intruder opens the door, the circuit senses the attempt of theft and the alarm will be activated. An anti-theft system may also integrate a car alarm or it might be just an engine immobilizer.

AM_Unit_01.indd 12 12/20/2019 4:19:13 PM

1.7 Safety Devices

1.7.1 Air Bag

An airbag is a type of vehicle safety device and is an occupant restraint system. The airbag module is designed to inflate extremely rapidly and then quickly deflate during a collision or impact with a surface or a rapid sudden deceleration. It consists of the airbag cushion, a flexible fabric bag, inflation module and impact sensor. The purpose of the airbag is to provide the occupants with a soft cushioning and restraint during a crash to prevent any impact or impact-caused injuries between the failing occupant and the interior of the vehicle like steering wheel, instrumental panel, structural body frame, headliner and windshield. Refer Figure 1.7.1.



Figure 1.7.1 Airbag

1.7.2 Anti-Lock Braking System (ABS)

An anti-lock braking system (ABS) is an automobile safety system that allows the wheel to maintain tyre contact with the road surface while sudden braking. It prevents the wheels from locking up and it will avoid skidding of vehicles. Refer Figure 1.7.2.

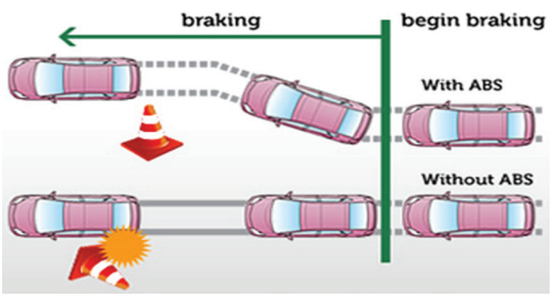

Figure 1.7.2 Anti-lock Braking System (ABS)

1.7.3 Automatic Door Lock

Automatic door locks will lock all the door simultaneously if the driver forgets to lock the doors. This will increase the safety of the car as well as things kept inside the car.

1.7.4 Steering Wheel Lock

Modern vehicles are fitted with a steering lock and it is an anti-theft device. It is fitted to the steering column usually below the steering wheel. The lock is combined with the ignition switch and engaged and disengaged either by a mechanical ignition key or electronically from the vehicles electronic control unit.

1.8 FIRST AID

Even a person following safety rules, there may be chances of an accident due to sudden failure of hand tools or machines. In such case, the medical assistance given to such person before taking to the hospital is called as First aid. First aid is provided to preserve life, prevent the condition from worsening or to promote recovery. First aid is generally performed by the layperson, with training in basic levels of first aid.

First Aid was started by S. Mark in the year 1823. A First Aid Kit should have the following contents. Shown in Figure 2(a).

1. Tincture Iodine
2. Tincture Benzene
3. Dettol
4. Burnol
5. Boric Powder
6. Meshed Cloth

AM_Unit_01.indd 13 12/20/2019 4:19:14 PM

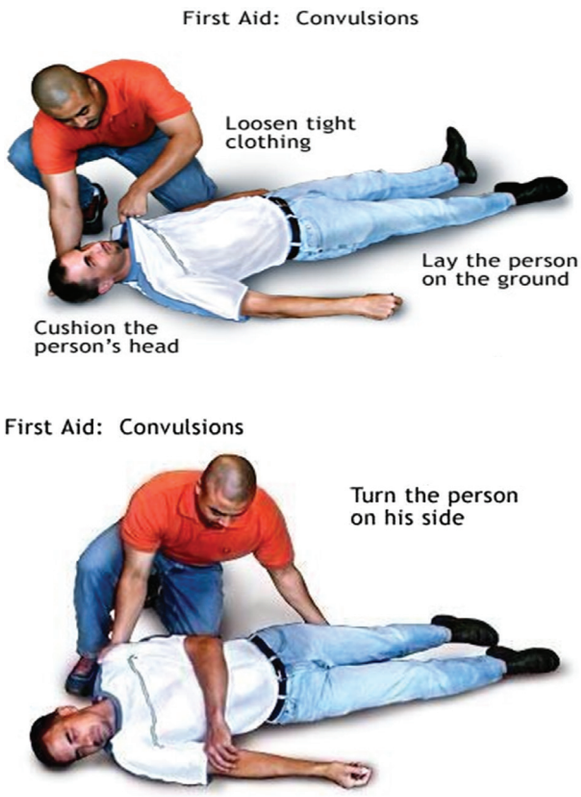

Figure 2 First Aid

7. Cotton
8. Small Scissor
9. Knife
10. Plaster
11. Small bamboo strips
12. Blade
13. Hydrogen peroxide, etc.,

1.9 IMPORTANT THINGS TO NOTICE

1. If patients are severely injured, he has taken immediately to the hospital or arrange for a doctor visit.
2. Level of first aid depends upon the severity of the injury.
3. Bleeding of blood should be stopped, especially if the patient is in the unconscious.



Figure 2(a) First Aid

AM_Unit_01.indd 14 12/20/2019 4:19:14 PM

1.10 IF DUST FALLS ON EYE

1. If dust or metal chip falls on the eye, do not press or squash the eye.
2. Pull the upper eyelash down.
3. If the dust in the eye reaches one end of the eye, the dust can be removed with the help of a clean wet cloth.
4. Consult the eye doctor, if necessary.

1.11 PROCEDURE TO HANDLE VEHICLE DURING EMERGENCY

A lot of developments are made in the field of automobile engineering. It is easy to operate a vehicle and journey is more comfortable, hence most of the people preferred self – driving when travelling to their required place. Hence it is highly essential to understand the principle of operation of the warning system, dashboards instruments, indicators etc., of an automobile. Refer Figures 3 and 3(a).



Figure 3



Figure 3(a)



Ministry of Labour and Employment (India)



Ministry of Labour & Employment

The Ministry of Labour and Employment is India's federal ministry which is responsible to protect and safeguard the interest of workers in general and the poor, deprived and disadvantaged sections of the society.

The Ministry aims to create a healthy work environment for higher production and productivity and to develop and coordinate vocational skill training and employment.

However, Skill Development responsibilities, such as Industrial Training and Apprenticeship responsibilities were transferred to the Ministry of Skill Development and Entrepreneurship from 9 November 2014

The Ministry launched the National Career Service portal on 20 July 2015 to help bridge the gap between job providers and job seekers

AM_Unit_01.indd 15 12/20/2019 4:19:15 PM

Running a vehicle AC when a vehicle at a stop, locking all the doors and windows when kids are inside is not advisable. This may cause injuries and accidents and difficult to come out when vehicle catches fire, or during suffocation. In such case, with the sharp edge on the detachable vehicle headrest can be used to break a vehicle's window glass. It is better to avoid sleeping inside the car, lock the kids inside the car, chatting long hours inside the locked car.

Student Activity

I. Students have to follow the following safety precautions:

1. Students should visit micro, small and central workshops to learn the machine safety precautions, self-safety precautions and vehicle safety rules and should submit a report on it.
2. Students should learn the first aid procedures to be followed in case of any accident from the experienced medical individuals and should submit a report on it.

Glossary

Radiation	-	கதிர்வீச்சு
Spindles	-	தண்டு
Prohibited	-	தடுப்பு
Hygiene	-	சுத்தமான
Meticulously	-	கண்டிப்பான
Clean visible	-	தெளிவான பார்வை
Features	-	வசதிகள்
Ensure	-	உறுதி படுத்துதல்
Works Space	-	பணிபுரியும் இடம்
Signboards	-	அறிவிப்பு விளக்கு பலகை

References

1. "Accident Prevention Manual for Industrial Operations", N.S.C.Chicago, 1982.
2. Blake R.B., "Industrial Safety" Prentice Hall, Inc., New Jersey, 1973.
3. Dan Petersen, "Techniques of Safety Management", McGraw - Hill Company, Tokyo, 1981.
4. Heinrich H.W. "Industrial Accident Prevention" McGraw-Hill Company, New York, 1980.

AM_Unit_01.indd 16 12/20/2019 4:19:15 PM

5. John Ridley, "Safety at Work", Butterworth and Co., London, 1983.
6. Lees, F.P., "Loss Prevention in Process Industries" Butterworthpublications, London, 2nd edition, 1990.
7. Relevant Indian Standards and Specifications, BIS, New Delhi.
8. "Safety and Good House Keeping", N.P.C., New Delhi, 1985.



Webliography

1. https://labour.gov.in/industrial-safety-health
2. http://www.tn.gov.in/department/18
3. https://en.wikipedia.org/wiki/Occupational_safety_and_health
4. https://en.wikipedia.org/wiki/Labour_law
5. http://www.seaindia.org/index.php
6. http://www.nsc.org.in/
7. http://www.fsai.in/index
8. https://books.google.co.in/books?id=2wovDwAAQBAJ&printsec=frontcover&dq=industrial+labour+and+general+laws+india&hl=en&sa=X&ved=0ahUKEwi0haCTxITZAhXLuY8KHflaBLYQ6AEIKDAA#v=onepage&q=industrial%20labour%20and%20general%20laws%20india&f=false
9. https://books.google.co.in/books?id=ns2ADAAAQBAJ&printsec=frontcover&dq=industrial+labour+and+general+laws+india&hl=en&sa=X&ved=0ahUKEwi0haCTxITZAhXLuY8KHflaBLYQ6AEILjAB#v=onepage&q=industrial%20labour%20and%20general%20laws%20india&f=false
10. https://books.google.co.in/books?id=fz1DDAAAQBAJ&printsec=frontcover&dq=industrial+labour+and+general+laws+india&hl=en&sa=X&ved=0ahUKEwi0haCTxITZAhXLuY8KHflaBLYQ6AEIMzAC#v=onepage&q=industrial%20labour%20and%20general%20laws%20india&f=false

AM_Unit_01.indd 17 12/20/2019 4:19:15 PM

SAMPLE QUESTIONS

Choose the correct answer:

1. Name the rules that are used to ensure the employees and equipment's from accident
   a) Vehicle safety rules
   b) First aid
   c) Safety rules
2. Name the device which is to be used during welding to protect eyes.
   a) Airbag b) Goggles
   c) Helmet
3. Which device is to be used to protect from Head injury?
   a) Cap b) Goggles
   c) Helmet
4. Maximum working hour for an Operator should not exceed
   a) 4 hours b) 6 hours
   c) 8 hours
5. What is the abbreviation of ABS?
   a) Anti-lock Braking System
   b) Anti Brake System
   c) Air Brake System

Answer the following questions:

1. Explain about safety Precaution.
2. Classify the types of safety precautions.
3. Write any five points on precautions about safety in shop floor.
4. Define self-safety precaution.
5. Explain any five points on self-safety precaution.
6. Explain any five points on machine safety precaution.
7. Explain any five-safety precaution on the tools.
8. Define First Aid.
9. what are the basic materials required for First Aid?
10. Explain some important points of the First Aid.
11. what is road safety?
12. Write five points to be considered on road safety.
13. What is meant by mandatory symbol of the traffic signals?
14. Draw and explain any three-mandatory symbol used in traffic signals.
15. What is meant by cautionary symbol of the traffic signals?
16. Draw and explain any three-cautionary symbol used in Traffic signals.
17. What is meant by Informatory symbol of the traffic signals?
18. What are the various precautionary alarms used in the vehicle?
19. What are the various instruments that are connected with Dangerous sound alarms?
20. Explain about ABS.

I96B1

AM_Unit_01.indd 18 12/20/2019 4:19:15 PM

Unit 2

Instruments and Measurements

Contents

2.0 Introduction
2.1 Ordinary Tools
- 2.1.1 Hand Tools
  - 2.1.1.1 Spanners and Wrenches
  - 2.1.1.2 Pliers
  - 2.1.1.3 Hammer
  - 2.1.1.4 Punches
  - 2.1.1.5 Screw Drivers
  - 2.1.1.6 Hacksaw Frame with Blade
  - 2.1.1.7 Files
  - 2.1.1.8 Drill Bits
- 2.1.2 Bench Tools
  - 2.1.2.1 Ordinary Bench Tools

2.2 Power Tools
- 2.2.1 Drilling Machine
- 2.2.2 Grinding Machine
- 2.2.3 Welding Machine
- 2.2.4 Vulcanizing Machine

2.3 Garage Tools
- 2.3.1 Direct Tools
- 2.3.2 Indirect Tools
- 2.3.3 Machinery & Special Tools
- 2.3.4 Electric Tools
- 2.3.5 Pneumatic Tools
- 2.3.6 Special Tools
- 2.3.7 Screw Jack and Horses
- 2.3.8 Hydraulic Power Tools

1UT2S

AM_Unit_02.indd 19 12/20/2019 4:25:23 PM

Learning Objectives

- To learn the importance of present day tools.
- To learn the range and characterisation of measuring instruments.

2.0 INTRODUCTION:

Whenever we do any work, we need to keep in mind that the work should be done in a simple and quality manner with minimum time and material damage. To complete the work as per the above statement, we need instruments. At the same time the amount of pressure, temperature, fuel and electricity which applied on the job at each stage should be known, for this purpose measuring tools are used. By the use of measuring tools, the supply pressure, temperature, fuel supplied and electricity consumption is monitored and controlled and the job is done with good quality. The most important thing in choosing the instruments and measuring tools is based on the nature of the work and working environment. Depends on the conditions, instruments, and measurements are classified into many types.

- In automobile service stations, various types of tools, equipment and machines are used. To understand the purpose of tools, they are mainly classified into two types. Figure 2(a), 2(b) shows Ordinary and Power Tools, Tool Trally

  They are,

  1. Ordinary Tools
  2. Power Tools



Figure 2(a) Ordinary and Power Tools

AM_Unit_02.indd 20 12/20/2019 4:25:23 PM



Figure 2(b) Tool Trally

2.1 ORDINARY TOOLS

In the automobile industry, the tools which are used to handle the small defects in the vehicle are called as ordinary tools. Depends on the handling, these tools are classified into many types.

They are,

1. Hand tools
2. Bench tools
3. Machine tools
4. Special tools.

2.1.1 Hand Tools

In automobile industries or in factories, the tool which are able to carry in hand, in and there where the defected vehicle is located and by means of which the defects are cleared is known as hand tools. Depends on the handling, hand tools are classified into many types.

1. Spanners
2. Pliers
3. Hammers
4. Punches
5. Screwdrivers
6. Hacksaw
7. Files
8. Drill Bit

2.1.1.1 Spanners and Wrenches

a) Open-Ended Spanners
b) Ring Spanners
c) Box Spanner
d) Adjustable Wrench/ Pipe Wrench
e) Spark Plug Spanner (Or) Tubular Spanner
f) Allen Wrench

a) Open-Ended Spanner

Both single-ended spanner and double ended spanner are inclusive of this type. Figure 2.1.1.1 shows Spanners. It is used to

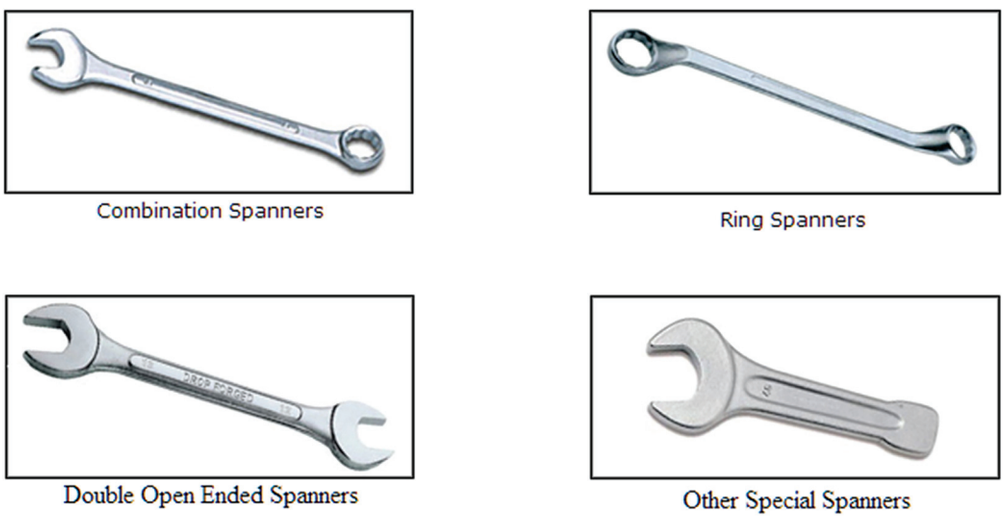

Figure 2.1.1.1 Spanners

AM_Unit_02.indd 21 12/20/2019 4:25:24 PM

loosen and tighten the four and six flat head bolt and nuts. It is made up of with Chromium, Vanadium and Alloy Steel metals. In all the spanners their sizes are mentioned in terms of mm or inch. Open Ended Spanners are shown in Figure 2.1.1.1(a).

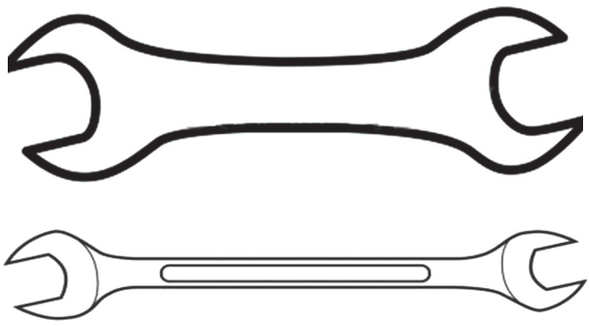

Figure 2.1.1.1(a) Open Ended Spanner

Sizes of Spanner

- 6-7 mm
- 8-9 mm
- 10-11 mm
- 12-13 mm
- 14-15 mm
- 16-17 mm
- 18-19 mm
- 20-22 mm
- 21-23 mm
- 24-27 mm
- 25-28 mm
- 27-32 mm

b) Ring Spanner

This type of spanner has ring shape on both the ends or at one end, with the ring portion is subdivided into 12 flat. It is used to loosen and tighten the four flat and six flat bolts. It is used in crucial and critical places where the other spanners are not able to loosen and tighten the bolts and nuts. Shown in Figure 2.1.1.1(b).



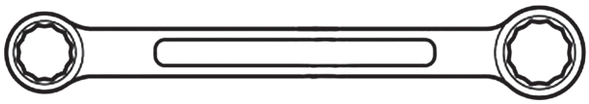

Figure 2.1.1.1(b) Ring Spanner

c) Box Spanner

It consists of with two portions namely head (Box or Socket) and handle. Different combination of socket and handles might be used for different purpose. Small Handle, T Handle, Long Handle, and 'U' Joint Reversible Ratchet are the handles which are commonly used. Shown in Figure 2.1.1.1(c)

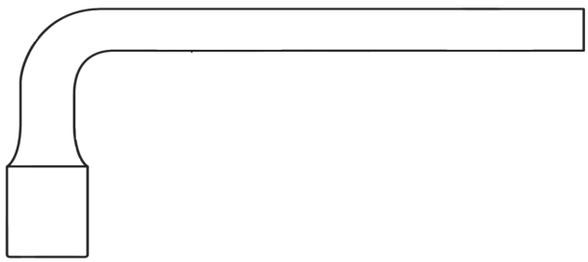

Figure 2.1.1.1(c) Box Spanner

d) Adjustable Wrench and Pipe Wrench

This is an arrangement in which the holding edge can be varied. There will be a fixed jaw and a moving jaw. By rotating knurled nut the moving jaw can be moved to the desired extent. An adjustable wrench can be used in rotating the bolt and nut. It is made up of high carbon steel. The pipe wrench is used for tubular cross section. Shown in Figure 2.1.1.1(d)

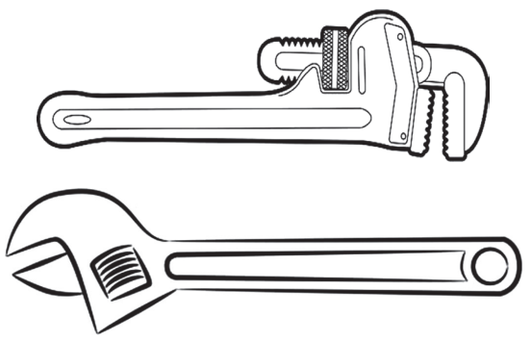

Figure 2.1.1.1(d) Adjustable Wrench and Pipe Wrench

AM_Unit_02.indd 22 12/20/2019 4:25:24 PM

e) Spark Plug (Or) Tubular Spanner

It is used to tighten or loosened the BOLT or NUT which are in pits. And also It is used to tighten or loosen the spark plug. So that, It is also called as Sparkplug spanner. Fig 2.1.1.1(e) shows Spark Plug Spanner.

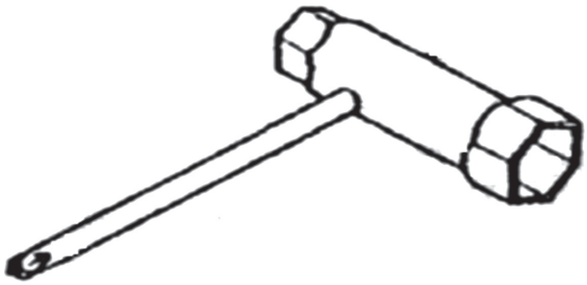

Figure 2.1.1.1(e) Spark Plug Spanner

f) Allen Key

It looks like 'L' shape which had the six edges. It is used to loosen or tighten the bolts which are having the six edges of the bolt head. It is available in both metric and inch scales. Likewise, it is also available in 'mm'. It is made up of high graded alloy steel. Fig 2.1.1.1(f) shows Allen Key.



Figure 2.1.1.1(f) Allen Key

Various Sizes of Allen Key

- 2.5 mm
- 3 mm
- 4 mm
- 5 mm
- 6 mm
- 7 mm
- 8 mm
- 10 mm
- 12 mm

2.1.1.2 Pliers

Plier is the tool which is used to do the bending, tearing, hardening of the thin wire, cutting, squeezing and pressing of the wires. Types of Pliers shown in Fig 2.1.1.2.



Figure 2.1.1.2 Plier

AM_Unit_02.indd 23 12/20/2019 4:25:24 PM

Types of Plier

a) Electrician Plier
b) Long Nose Plier
c) Circlip Plier

a) Electrician plier

In this two jaws are able to open to a certain limit. Inside of this have groves which are cut in terms of lines. These pliers handles are insulated with plastic material. Due to the above reason, these types of pliers are called as electrician plier and are used by the electricians. Electrician Plier is shown in Fig 2.1.1.2(a).

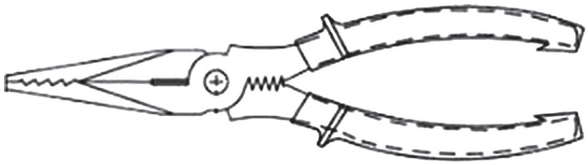

Figure 2.1.1.2(a) Electrician Plier

b) Long Nose Plier

This is mostly used for twisting the wires. That is, to grab and enlarge the wire in a tight way. It is made up of with Iron Alloy metals. Long Nose Plier shown in Fig 2.1.1.2(b).

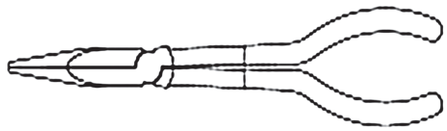

Figure 2.1.1.2(b) Long Nose Plier

2.1.1.3 Hammer

According to the need of the work, hammers may be used with different shapes and weights. The main purpose of using a hammer is to perform the operations like punching, bending and riveting. Hammer is shown in Fig 2.1.1.3.

Types of Hammer

a) Ball Peen Hammer
b) Cross Peen Hammer
c) Straight Peen Hammer
d) Sledge Hammer
e) Mallet Hammer
f) Claw Hammer

a) Ball Peen Hammer

Its head is in the round like shaped. Due to this structure, it is called a ball peen hammer. It is mainly used for to perform the riveting operation. Ball Peen Hammer shown in Fig 2.1.1.3(a).



Figure 2.1.1.3 Hammers

AM_Unit_02.indd 24 12/20/2019 4:25:25 PM

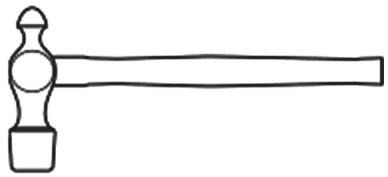

Figure 2.1.1.3(a) Ball Peen Hammer

b) Cross Peen Hammer

A cross PEEN hammer is a hammer used by blacksmiths to complete metal work. The wedge-shaped end of the hammer allows you to make the metal puller when used with heat. The main functions of a cross peen hammer are forging and riveting. Forging is a process in which you heat a single piece of metal and use tools to obtain a particular shape. Fig 2.1.1.3(b) shows Cross Peen Hammer.

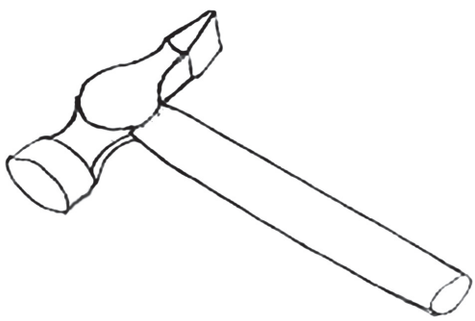

Figure 2.1.1.3(b) Cross Peen Hammer

c) Straight Peen Hammer

In this hammer, either side of the face does not have any projections, unlike other hammer types. This is used for general purpose. Fig 2.1.1.3(c) shows Straight Peen Hammer



Figure 2.1.1.3(c) Straight Peen Hammer

d) Sledge Hammer

The weight of this hammer is two or three times more than the ordinary type hammer. This is mainly used for blacksmith purpose. Their handles are made only of wood. Fig 2.1.1.3(d) shows Sledge Hammer.

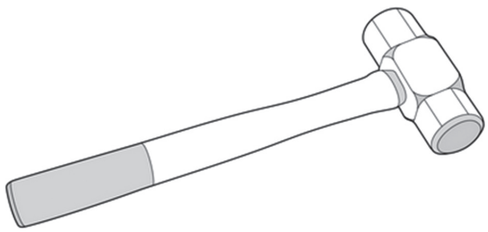

Figure 2.1.1.3(d) Sledge Hammer

e) Mallet Hammer

This is often used for SHEET METAL jobs. MALLET HAMMER can be used to adjust curves in some sophisticated and smooth objects. This makes the vehicle more useful during tinker. Fig 2.1.1.3(e) shows Mallet Hammer.

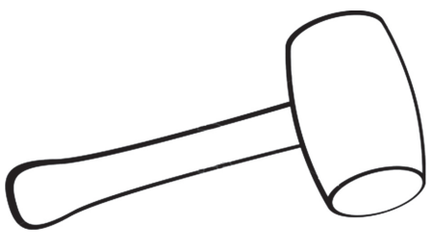

Figure 2.1.1.3(e) Mallet Hammer

f) Claw Hammer

It is used to split the nail and to general jobs. Figure 2.1.1.3(f) shows Claw Hammer

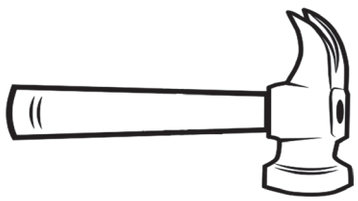

Figure 2.1.1.3(f) Claw Hammer

AM_Unit_02.indd 25 12/20/2019 4:25:25 PM

2.1.1.4 Punches

Punch is used to place a punch at the drilling point before drilling an object. It makes drilling easier. Its node will be at many angles. It is categorized as such.

a) Centre Punch
b) Dot Punch
c) Prick Punch
d) Hollow Puch
e) Letter / Number Punch

a) Centre Punch

In the drilling jobs, the edge of the drill unit has to be at and rotate. For this small and wide punch is made at the center. It is called as center punch. It's angle 90^0. Fig 2.1.1.4(a) shows Centre Punch.

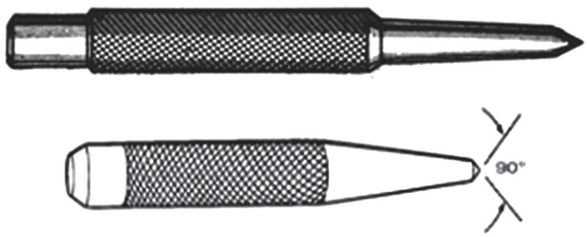

Figure 2.1.1.4(a) Centre Punch

b) Dot Punch

The lines which are drawn by the scriber can be made clearly visible by using dot punches. In this dots are put over the line. Its angle is 60°. Fig 2.1.1.4(b) shows Dot Punch



Figure 2.1.1.4(b) Dot Punch

c) Prick Punch

Deep points are made of the soft metals and some tactical works with the help of prick punch. Its angle is 30^0. Figure 2.1.1.4(c) shows Prick Punch.



Figure 2.1.1.4(c) Prick Punch

d) Hollow Punch

The tool which has a hollow section inside the nose is used to cut the hole in the skin, rubber card etc. This tool is called as hollow punch. Fig 2.1.1.4(d) shows Hollow Punch.



Figure 2.1.1.4(d) Hollow Punch

e) Letter and Number Punch

In this punch, the letters or numbers are labeled or cut over the punch in order to punch letter and number in places where we need them. These types of punches are made up of high carbon steel. Fig 2.1.1.4(e) shows Letter and Number Punch.



Figure 2.1.1.4(e) Letter and Number Punch

2.1.1.5 Screw Drivers

The screw driver is used to fix or remove the screw based on the requirement. Refer Figure 2.1.1.5(a). The screwdrivers are classified mainly based on their tip shape and their types are given below.

AM_Unit_02.indd 26 12/20/2019 4:25:25 PM

Types of Screw driver

a) Star Screw Driver

b) Ratchet Screw Driver

c) Offset Screw Driver

Different types of Screw Drivers are shown in Fig 2.1.1.5(2).



Figure 2.1.1.5(1) Screw Driver

a) Star Screwdriver

This is mainly used to screw and unscrew the star-shaped screw heads.

b) Ratchet Screwdriver

Screwdrivers with the ratchet system are often used to screw and unscrew the large number of long screws in the long run.

2.1.1.6 Hacksaw Frame with Blade

It is used to cut metal items, unnecessary portions, cutting wire, bar and tap. The frame is made up of mild steel and blade is made up of low alloy steel. The tip of the teeth, which is 250 MM to 300 MM alone, can be hardened by heat treatment process. The gap between the two tips is called pitch. Fig 2.1.1.6 shows Hacksaw Frame with Blade.

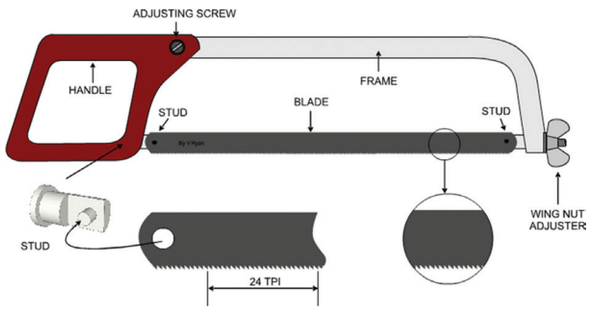

Figure 2.1.1.6 Hacksaw Frame with Blade

Type of hacksaw frame with blade:

I. Solid Type

II. Tubular Type

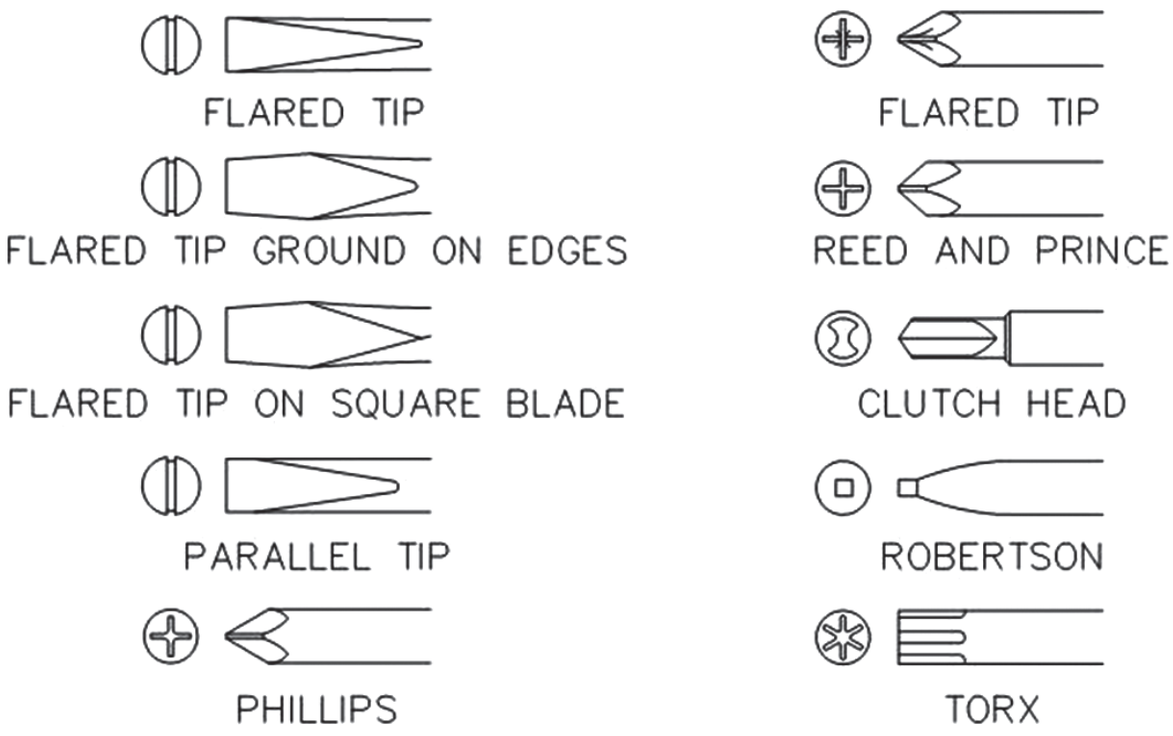

Figure 2.1.1.5(2) Different Types of Screw Driver

AM_Unit_02.indd 27 12/20/2019 4:25:25 PM

Solid Type

- Fixed type
- Adjustable type

Tubular type

- Fixed type
- Adjustable type

2.1.1.7 Files

The main task of this file is to removing the small size of the materials in the workshops. The metal is extracted when it is pushed forward in the workload. Fig 2.1.1.7 shows File.

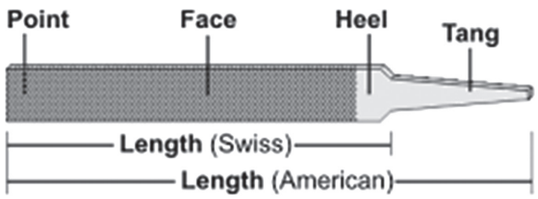

Figure 2.1.1.7 File

The files are classified based on the shape and kind of cut and are listed below.

a) Shape (or) Cross Section:

Fig 2.1.1.7(a) shows different shapes of File.

1. Square File
2. Flat File
3. Half Round File
4. Triangular File
5. Knife Edge File



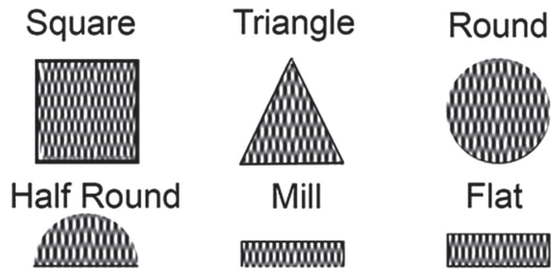

Figure 2.1.1.7(a) Shapes of file

b) Kind of Cut

Fig 2.1.1.7(b) shows different of files based on kind of cut.

1. Single Cut File
2. Double Cut File
3. Rasp Cut File
4. Curved Cut File

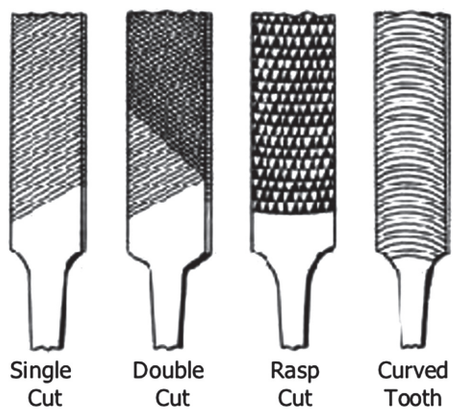

Figure 2.1.1.7(b) Files based on kind of cut

Single Cut File

The teeth of the files are cut in the same way as 60°. It is used to rub the unnecessary metal in soft metals. And it is also used to sharpen the teeth of the saw.

Double Cut File

In the facade, the teeth are cut in both directions. The overcut teeth are cut in 700's and the uppercut teeth are cut in 510. It is used to rub the hard metal, such as iron steel.

AM_Unit_02.indd 28 12/20/2019 4:25:25 PM

Rasp Cut File

This is a file of teeth that are separated by straight and parallel lines. The face of the teeth is slightly upward compared with the file face. It is used to work on smooth materials such as wooden, leather, aluminium.

Curved Cut File

It is capable of cutting deeply. It is used to work on smooth materials such as aluminium, tin, copper and plastic.

2.1.1.8 Drill Bits

Fig 2.1.1.8 shows the different types of Drill Bits. Round shaped rotating drill bit is called as twist drill bit. If a job is drilled from top to bottom is called through hole and if a job is partially drilled for a distance then it is called as blind hole. The drill bit is made up of High-speed steel. It has the polygonal cutting edge. The types of drill bits are given below.



Figure 2.1.1.8 Drill Bits

Types of Drill Bits

- Straight shank twisted drill bit
- Taper shank twisted drill bit

2.1.2 Bench Tools

It is not possible to have all the corrective measures for the damaged vehicle at the particular location itself. Due to this, some defected parts are removed from the vehicle. These parts are then brought back to the

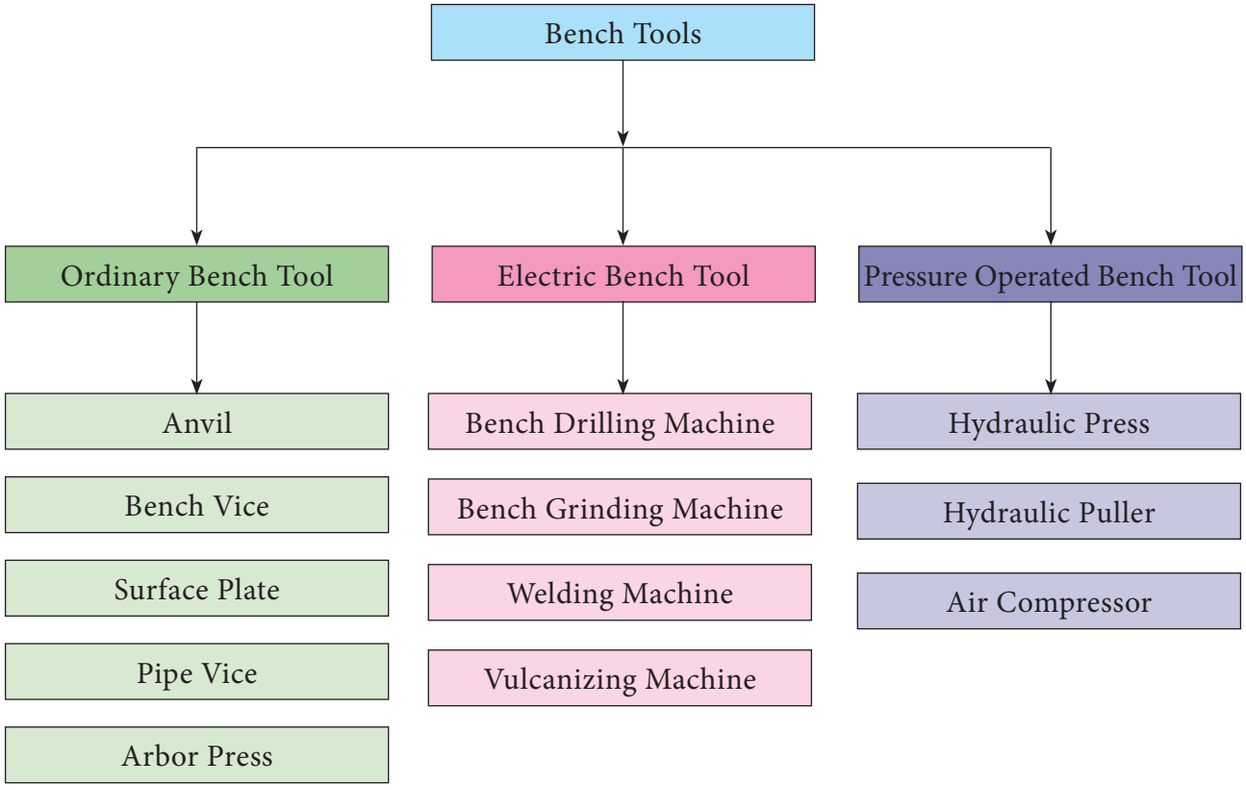

AM_Unit_02.indd 29 12/20/2019 4:25:25 PM

service station and repaired with the tools. This process of repairing is known as bench tools. Bench tools are classified into many types.

2.1.2.1 Ordinary Bench Tools

Tools which are used to repair the defected parts of the vehicle in the service station are known as ordinary bench tools. Tools which are used for this purpose are described below. Fig 2.1.2(a) shows Anvil.

a) Anvil

It is used to repair the Bending, shearing, and rolling of the iron and sheet metal parts in the required manner.

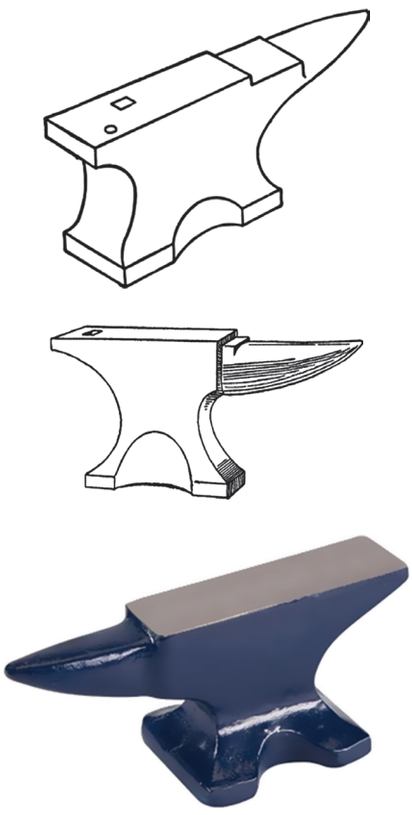

Figure 2.1.2(a) Anvil

b) Bench Vice

A bench vice is a device used for cutting or rubbing portions of the spatial part or to fold, or to tighten the bolt and nut, to retain the nipple. It is connected to the bench-lob holes in the workshop. The two jaws in it are used to tighten the object to work. Fig 2.1.2(b) shows Bench Vice.

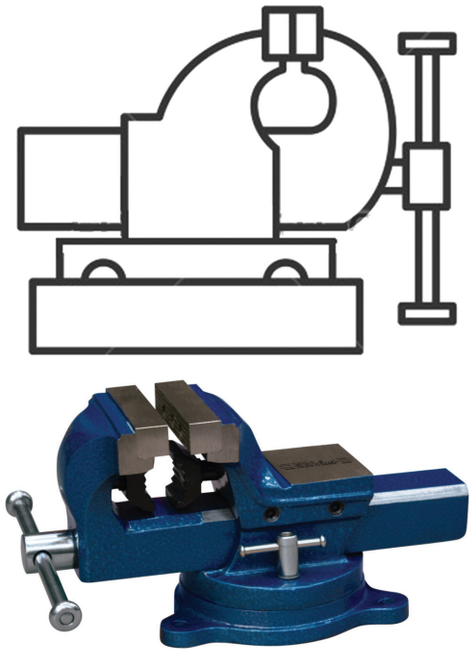

Figure 2.1.2(b) Bench Vice

c) Surface Plate

The surface plate is used to check whether the surface of the repaired part is equal to the surface plate, to adjust the size lines and to verify the corners are in the level. It is made of heavy iron plate. Its surface will be equal and erroneous. Figure 2.1.2(c) shows Surface Plate.

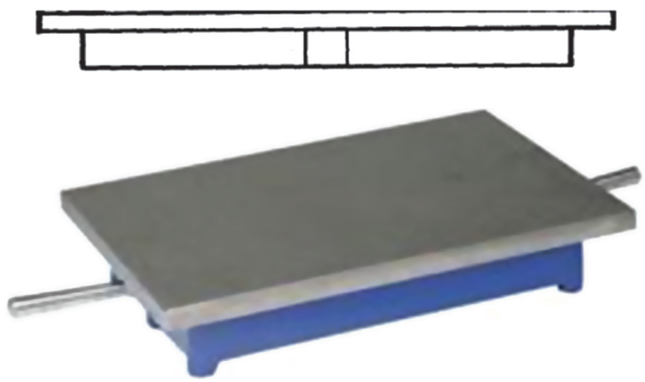

Figure 2.1.2(c) Surface Plate

AM_Unit_02.indd 30 12/20/2019 4:25:25 PM

d) Pipe Vice

This type of pipe vice is used to hold the cylindrical shape parts for to tighten, loosen, tear or cut. This action is similar to bench vice. Fig 2.1.2(d) shows Pipe Vice.

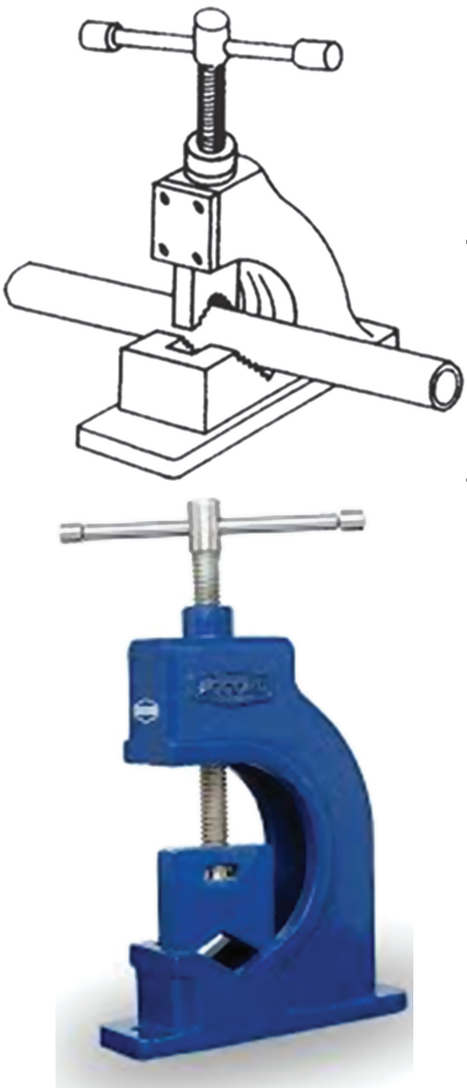

Figure 2.1.2(d) Pipe Vice

e) Arbor press

This type of bench tool is made with our hand-operated system. This type of press is used to tightening and loosening the bearing, gears, pulleys and straightening the shafts. This instrument runs on lever theory. The mechanical press is named as it operated by hand without operating by electricity, fluid or wind. Fig 2.1.2(e) shows Arbor Press.

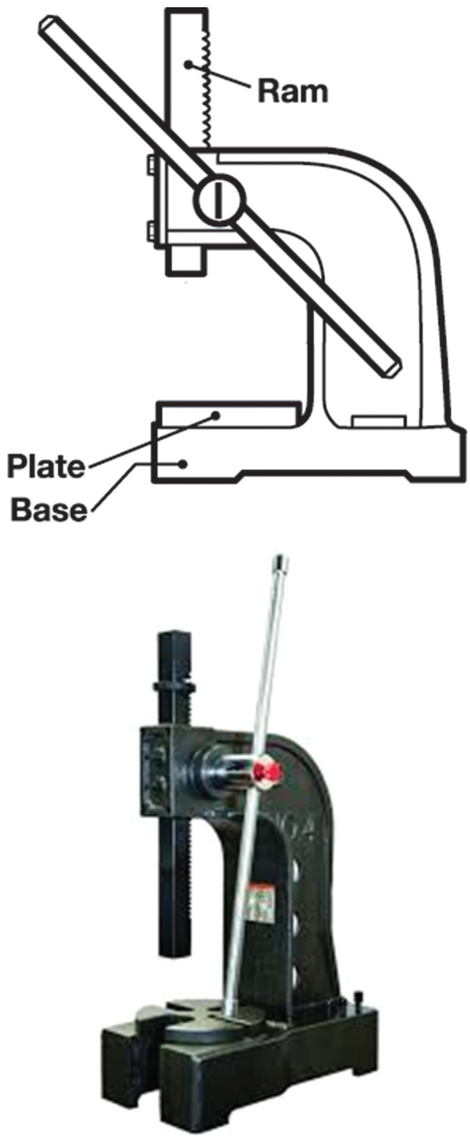

Figure 2.1.2(e) Arbor Press

2.2 POWER TOOLS

With the use of hand tools, tightening and loosening of nut and bolt and drilling is not as simple. It consumes more effort and time. To complete these types of work in an effective and quick manner, electric, hydraulic, pneumatic tools are used. It is named as power tools means. It is classified depends on the nature work. They are

AM_Unit_02.indd 31 12/20/2019 4:25:26 PM

1. Drilling Machine
2. Grinding Machine
3. Welding Machine
4. Vulcanizing Machine
5. Air Compressor
6. Honing Machine
7. Battery Charger
8. Cylinder Boring Machine
9. Spark Plug Tester
10. Front Shaft Grinding Machine
11. Cell Tester

2.2.1 Drilling Machine

Instead of drilling a hole by hand, drilling is made by means of an electric motor. This is done with the use of drill bit which is operated by electric motor. The to and fro motion of drill bit is controlled by a wheel. It requires minimum effort and time compared to hand drilling. Drilling machines are again classified into many types. They are,

a. Hand Drilling Machine
b. Flexible Drilling Machine

a. Hand Drilling Machine

These drilling machines are used to drill the hole in the wall and various portions of vehicles. It is also called as a Portable drilling machine. Fig 2.2.1(a) shows Hand Drilling Machine.

b. Flexible Drilling Machine:

These types of drilling machines are used to drill in the parts like crankshaft journals and in the connecting rod oil bath. These are mainly used to drill in the curved region. Fig 2.2.1(b) shows Flexible drilling machine.



Figure -2.2.1 (b) Flexible Drilling Machine



Figure 2.2.1 (a) Hand Drilling Machine

AM_Unit_02.indd 32 12/20/2019 4:25:26 PM

DRILL BIT

Howard Robard Hughes Sr.

Howard Robard Hughes Sr. (September 9, 1869 - January 14, 1924) was an American businessman and inventor. He was the founder of Hughes Tool Company.

He invented the "Sharp-Hughes" rotary tri-cone rock drill bit during the Texas Oil Boom.





He is best known as the father of Howard Hughes, the famous American business tycoon.

2.2.2 GRINDING MACHINE

Whenever the iron piece is subjected to cut and drill, the surface of the portion gets roughness. It is not possible to remove the roughness of the piece in hand. Instead of this, grinding machine is used to soften the iron piece and it requires minimum time and effort to do the process. It is named grinding machine because of grinding operation is done by electric means. If the grinding machine is located on the bench then it is known as bench grinding machine. If it is carried to the workplace then it is known as a portable grinding machine. Fig 2.2.2 shows Grinding Machine.

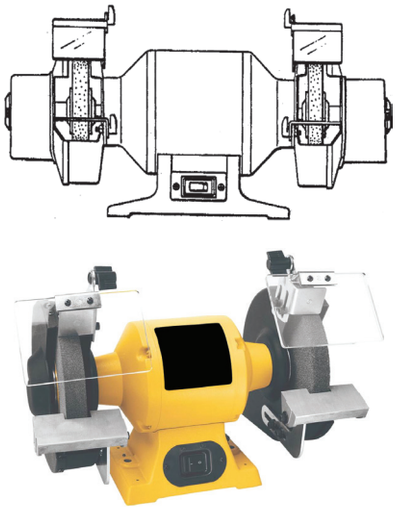

Figure 2.2.2 Grinding Machine

2.2.3 WELDING MACHINE

Two metal pieces can be joined by the use of nuts and bolts. But strength at their joined portions is in a weak manner. By joining the two metal pieces by means of welding, the strength of the material becomes strong. The machine which is used to join two metal pieces is called as welding machine. Fig 2.2.3 shows Welding Machine.

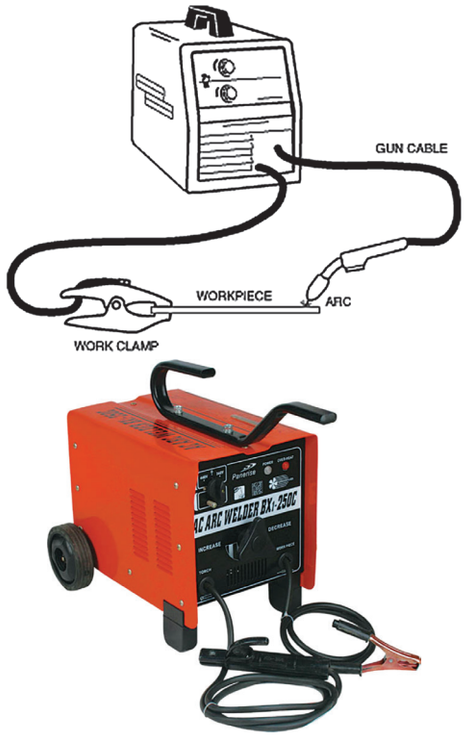

Figure 2.2.3 Welding Machine

AM_Unit_02.indd 33 12/20/2019 4:25:26 PM

2.2.4 VULCANIZING MACHINE

Vehicle tire and tubes should maintain in a proper manner. Otherwise severe effects may be taken place. While the vehicle is traveling on road, if a sharp object in the road gets perforated in the tire, the air in the tire tube gets deflated and due to this vehicle driving motion gets affected. If it continues its motion then the tube gets to tear off. This is known as a puncture. This type of puncture cannot be cured by the cooling method. Curing this puncture with raw rubber is called as Vulcanizing. High pressure and temperature are required to vulcanize the rubber material. The machine which is used to do this vulcanizing process is named as a vulcanizing machine. Shown in Fig 2.2.4.

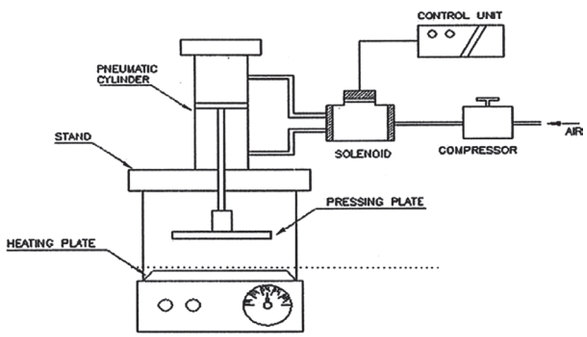





Figure 2.2.4 Vulcanizing Machine

2.3 GARAGE TOOLS

Measuring tools required for automobiles service station and garage are classified broadly two types

1. Direct tools
2. Indirect tools

2.3.1 DIRECT TOOLS

a) Steel Rule
b) Outside Micrometer
c) Vernier Caliper
d) Wire Gauge
e) Voltmeter
f) Ammeter
g) Hydrometer
h) Radius Gauge
i) R.P.M. Gauge
j) Pressure Gauge
k) Speedometer
l) Oddo Meter

a) Steel Rule

It is a metal steel rule which has both metric and British units. It is a direct measuring instrument. It is made up of spring steel

AM_Unit_02.indd 34 12/20/2019 4:25:26 PM



International Organization for Standardization

The International Organization for Standardization (ISO) is an international standard-setting body composed of representatives from various national standards organizations.

Founded on 23 February 1947, the organization promotes worldwide proprietary, industrial and commercial standards. It is headquartered in Geneva, Switzerland and works in 162 countries.

Use of the standards aids in the creation of products and services that are safe, reliable and of good quality. The standards help businesses increase productivity while minimizing errors and waste.

By enabling products from different markets to be directly compared, they facilitate companies in entering new markets and assist in the development of global trade on a fair basis.

The standards also serve to safeguard consumers and the end-users of products and services, ensuring that certified products conform to the minimum standards set internationally.

or stainless steel. Surface finish was done over the steel rule in order to avoid corrosion. Satin chrome is used for surface finish process. It is available in following measurements, Steel Rule shown in Fig 2.3.1(a).

- 150 mm
- 300 mm
- 600 mm

b) Outside Micrometer

It is used to measure the external diameter of a work as simple, quick, straight and accurate manner. It can be used to measure accurately 0.0001 inches or 0.01mm diameter of a screw. Besides these, micrometres are available in many formats, sizes as needed. Fig 2.3.1(b) shows Outside Micrometer.



Figure 2.3.1(a) Steel Rule

AM_Unit_02.indd 35 12/20/2019 4:25:26 PM

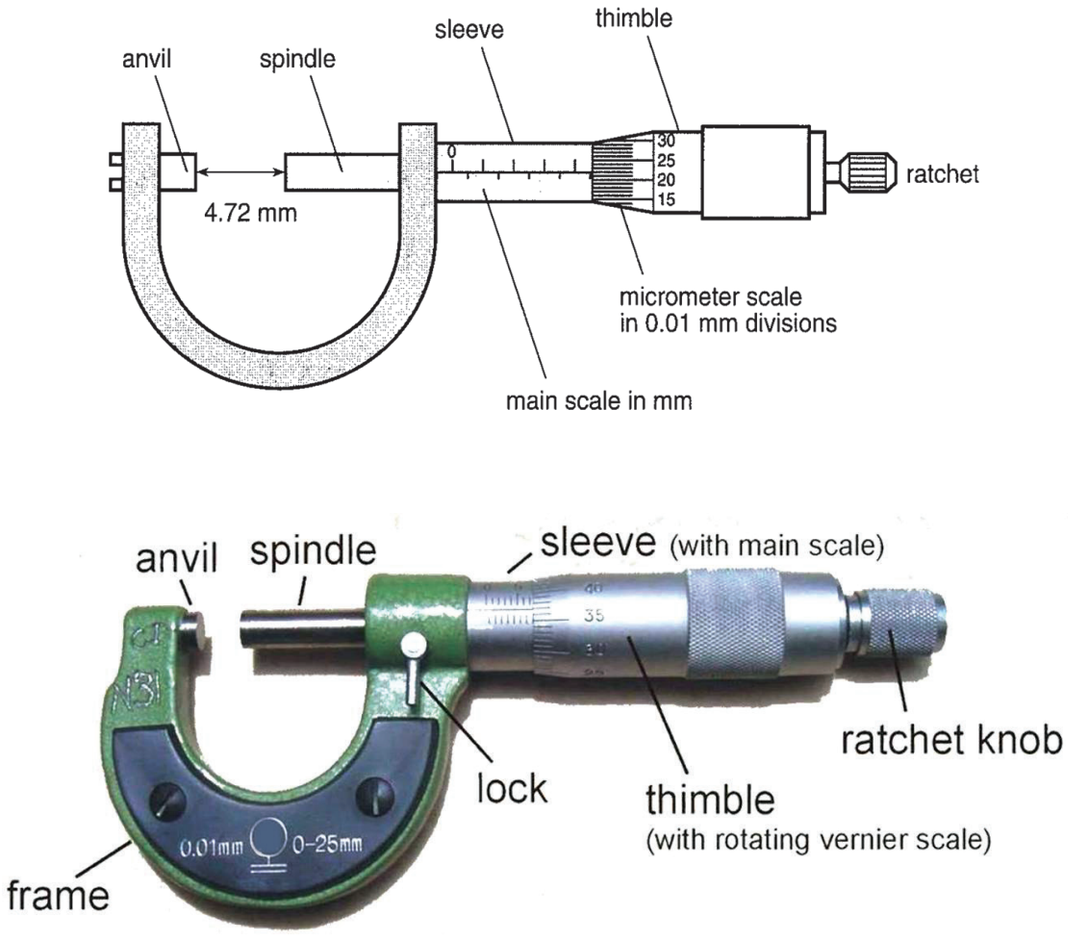

Figure 2.3.1(b) Outside Micrometer

c) Vernier Caliper

Vernier calliper is often used in factories as it is easy and convenient to measure metal components than micrometers. It helps to measure external and internal levels. It is a direct measuring instrument. Vernier Caliper is shows in Fig 2.3.1(c).

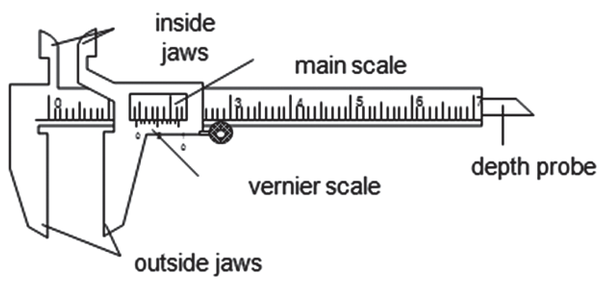

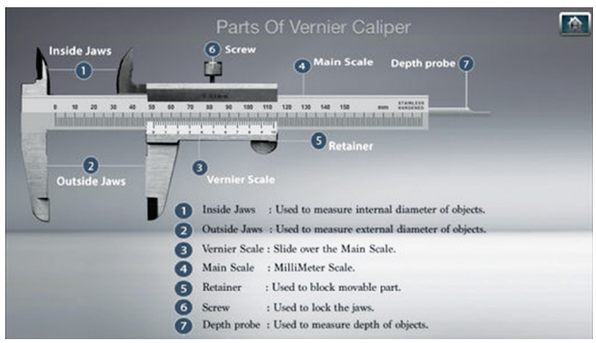

Figure 2.3.1(c) Vernier Caliper

d) Wire Gauge

The thickness of the thin wire or the plate is represented by the gauge number. If the gauge number is higher, the thickness

AM_Unit_02.indd 36 12/20/2019 4:25:27 PM

GAUGE BLOCK

Carl Edvard Johansson:





Gauge blocks were invented in 1896 by Swedish machinist Carl Edvard Johansson. They are used as a reference for the calibration of measuring equipment used in machine shops, such as micrometers, sine bars, calipers, and dial indicators (when used in an inspection role).

Gauge blocks are the main means of length standardization used by industry.

Gauge blocks (also known as gage blocks, Johansson gauges, slip gauges, or Jo blocks) are a system for producing precision lengths.

The individual gauge block is a metal or ceramic block that has been precision ground and lapped to a specific thickness.

Gauge blocks come in sets of blocks with a range of standard lengths. In use, the blocks are stacked to make up a desired length.

is lower and if the gauge number is lower, the thickness will be higher. Wire gauge is a rounded plate which has holes of various sizes and has a provision to insert the rounded plates at the edge. Gauge numbers are marked on the gauge plate. Shown in Fig 2.3.1(d).

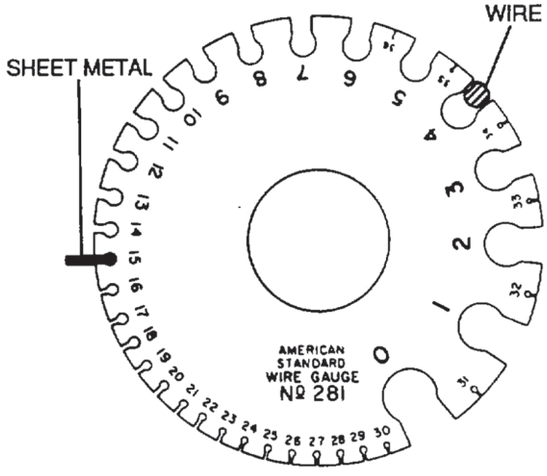

Figure 2.3.1(d) Wire Gauge

e) Voltmeter

The voltmeter is an instrument which is used to measure the voltage across the electrical circuit. The unit of voltage is "volt". It is used as 240 volts in homes and 440 volts at workstations. Fig 2.3.1(e) shows Voltmeter.



Figure 2.3.1(e) Voltmeter

AM_Unit_02.indd 37 12/20/2019 4:25:27 PM

f) Ammeter

It is used to measure the amount of current passing through the circuit. It is used to verify the faults of the industry and household devices. It helps to check the amount of electricity. The unit of the ammeter is "Ampere". Fig 2.3.1(f) shows Ammeter.



Figure 2.3.1(f) Ammeter

g) Hydrometer

Hydrometer is used to calculate the density of the insulating fluid (diluted sulfuric acid) in the battery. The amount of liquid in the hydrometer is used to calculate the density of the liquid. While pressing the rubber bulb in the hydrometer, the liquid come inside the cylinder from the cell. Fig 2.3.1(g) shows Hydrometer.





Figure 2.3.1(g) Hydrometer

h) Radius Gauge

Radius gauge is used to measure the specific radius of the projected surface area of the job or the corners of the job. Radius gauge is also used to measure and test the circumference of the curve in the corner or corners. Radius Gauge is shown in Fig 2.3.1(h).



Figure 2.3.1(h) Radius Gauge

i) RPM Gauge

It is used measure the speed of the engine. RPM gauge is used to show the number of cycles per minute for each minute. The red pin is used to show the cycle of 6000 rpm to 7000 rpm. But nowadays digital displays are used. Fig 2.3.1(i) shows RPM Gauge.



Figure 2.3.1(i) RPM Gauge

AM_Unit_02.indd 38 12/20/2019 4:25:27 PM

j) Pressure Gauge

It is used to measure air pressure and pressure of lubricating oil in the engine cylinder. It is set on the vehicle's dashboard. Fig 2.3.1(j) shows Pressure Gauge.



Figure 2.3.1(j) Pressure Gauge

k) Speedometer

It helps to calculate the speed of the vehicles. This calculation helps the driver to increase or decrease the driving speed of the vehicle based on the situation. Figure 2.3.1(k) shows Speedometer.

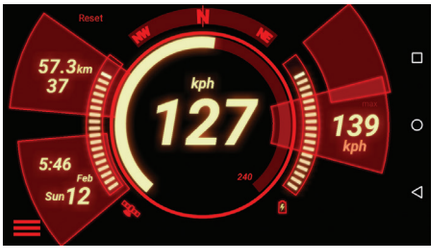

Figure 2.3.1(k) Speedometer

l) Odometer

This helps to show, how much the vehicle has been running. (Eg., 15000 km). Fig 2.3.1(l) shows Odometer.



Figure 2.3.1(l) Odometer

2.3.2 INDIRECT TOOLS

a) Feeler Gauge
b) Outside Caliper
c) Inside Caliper

a) Feeler Gauge

The set of thin steel plates which are used to measure the size of the shortest spacing is called the feeler gauge. These are placed in a heat treated shell in order to separate them easily. It is very useful for measuring gaps in valve tape bed, sparkplug cape. Fig 2.3.2(a) shows Feeler Gauge.

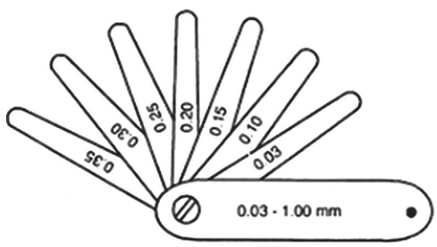

Figure 2.3.2(a) Feeler Gauge

b) Outside Caliper and Inside Caliper

This setting can be found in the picture. It is used to measure the outer diameters of the pipe and the engine cylinder. This can measure the external diameter very accurately.

Inside calliper is used to measure the inner diameter of the engine cylinder holes, pipes and the inner dimensions of the canal. It is an indirect measuring instrument. Fig 2.3.2(b) shows Outside and Inside Calipers.

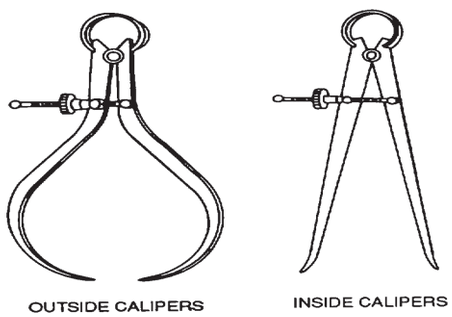

Figure 2.3.2 (b) Outside and Inside Calipers

AM_Unit_02.indd 39 12/20/2019 4:25:28 PM

2.3.3 Machinery and Special Tools

Power tools used in automobile vehicles are classified as below,

2.3.4 Electric Tools

2.3.4(a) Drilling Machine

It helps to drill wood and metal parts. These are usually two types. i) Bench Drilling

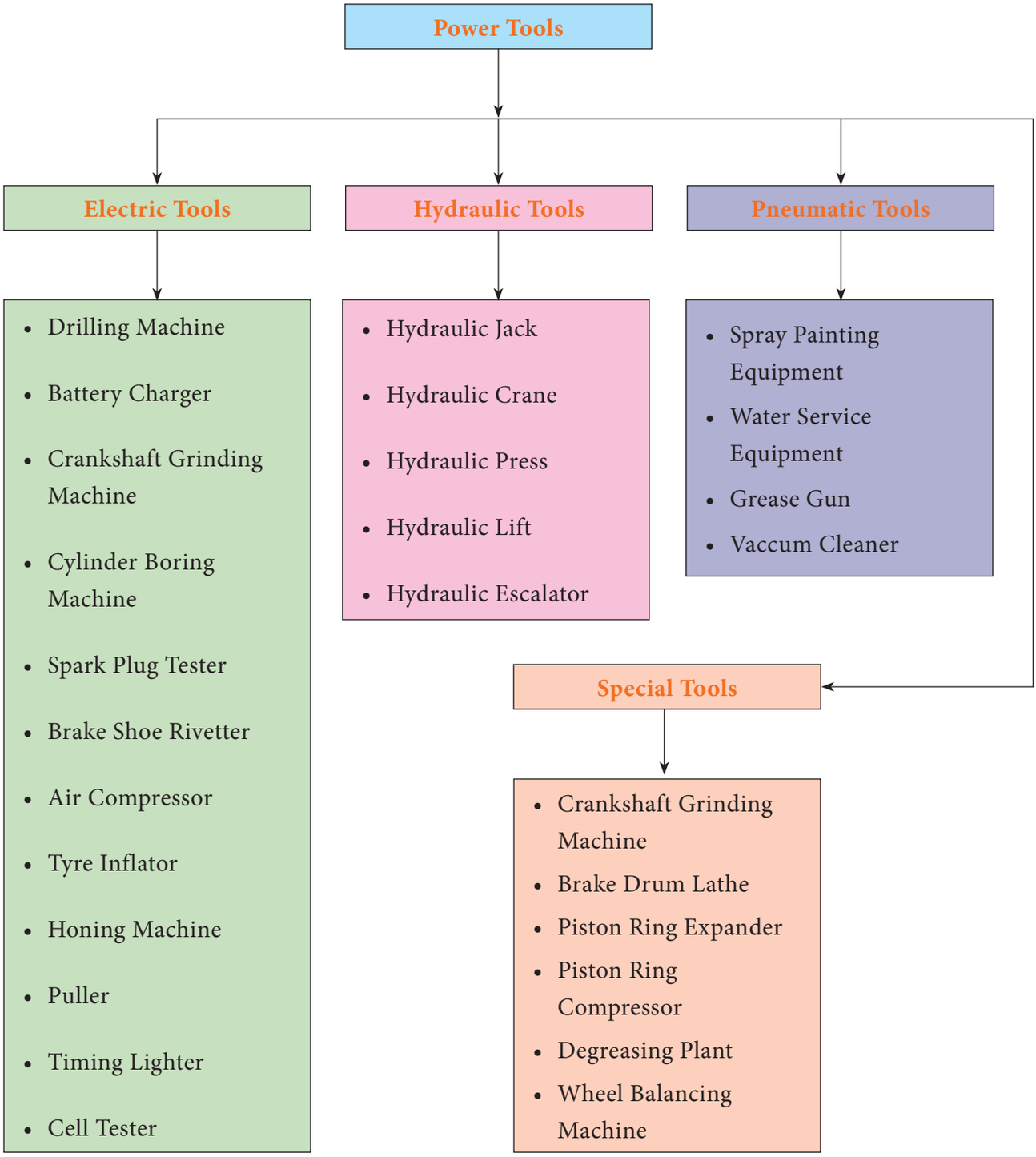

AM_Unit_02.indd 40 12/20/2019 4:25:28 PM

Machine ii) Portable Drilling Machine. Fig 2.3.4(a) shows the Drilling Machine.

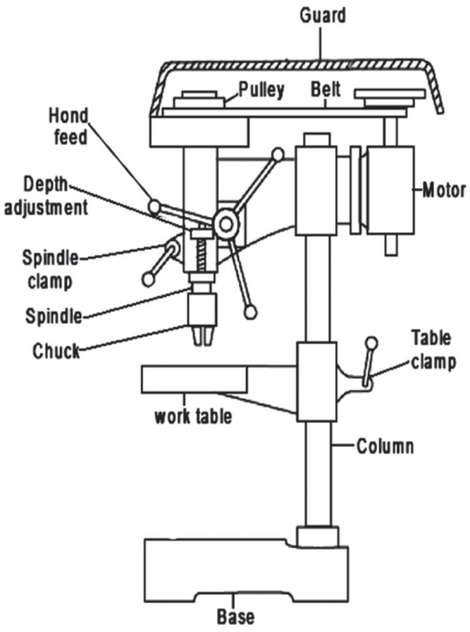



Figure 2.3.4(a) Pillar Type Drilling Machine

2.3.4(b) Battery Charger

The battery charger is used to charge the batteries. It converts the alternating current into a direct current and makes the battery to be charged. Because the battery cannot be directly charged with alternating current. Figure 2.3.4(b) shows Battery Charger.



Figure 2.3.4(b) Battery Charger

2.3.4(c) Cylinder Boring Machine

Continues operation engine leads to wear on the cylinder walls. The energy of the engine is wasted by such wearing. Therefore, Cylinder Boring Machine is used to adjust the cylinder's inner diameter. Refer Figure 2.3.4(c).



Figure 2.3.4(c) Cylinder Boring Machine

2.3.4(d) Spark Plug Tester

In petrol engine at the end of the compression stroke, spark is ignited to burn the

AM_Unit_02.indd 41 12/20/2019 4:25:28 PM

compressed fuel. This is done with the help of spark plug. The equipment which is used to check the spark level is in required manner is known as SPARK PLUG TESTER. Shown in Fig 2.3.4(d).

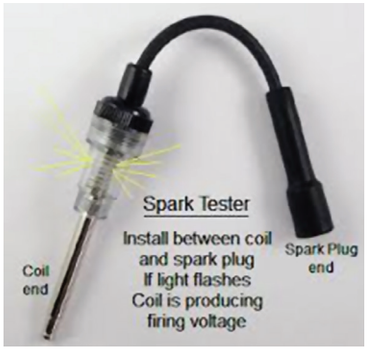





Figure 2.3.4(d) Spark Plug Tester

2.3.4(e) Caster Camber Gauge

It is used to check the wheel alignment in four wheeled vehicles.

2.3.4(f) Brake Shoe Rivetter

In the top portion of the brake shoe, the new lining is designed to fit the rivets in the hole to tighten the brake shoe parts.

2.3.4(g) Air Compressor

The machine which is used to compress and store the atmospheric air to the required pressure level is named as air compressor. Shown in Fig 2.3.4(g).



Figure 2.3.4(g) Air Compressor

Usages

1. It is used to refill the air in the tire tube.
2. It is used to clean the spark plug, carburetor and nozzle.

2.3.4(h) Tyre Inflator Gauge

It is used to measure the air pressure which is present inside the tire tube at the time of air filling by without having air leakage. Tyre Inflator Gauge is shown in the Fig 2.3.4(h).



Figure 2.3.4(h) Tyre Inflator Gauge

AM_Unit_02.indd 42 12/20/2019 4:25:28 PM

2.3.4(i) Honing Machine

Honing machine is used to regulate the depreciation in the IC engine cylinder, when the cylinder depreciation level is below 0.01mm. Cylinder wall which is made with the use of cylinder bearing is smoothened by cylinder honing. Fig 2.3.4(i) shows Honing Machine.



Figure 2.3.4(i) Honing Machine

2.3.4(j) Timing Lighter

This equipment is used to check whether the spark plug is producing the spark in proper firing order in the engine cylinder. Figure 2.3.4(j) shows Timing Lighter.



Figure 2.3.4(j) Timing Lighter

2.3.4(k) Cell Tester

It is used to check the life cycle of battery cell and is used to check the amount of electric charge. This is checked by connecting the positive and negative poles of the battery by wire and by doing this if it is lighted up then it is understood that battery is having charge. Fig 2.3.4(k) shows Cell Tester.

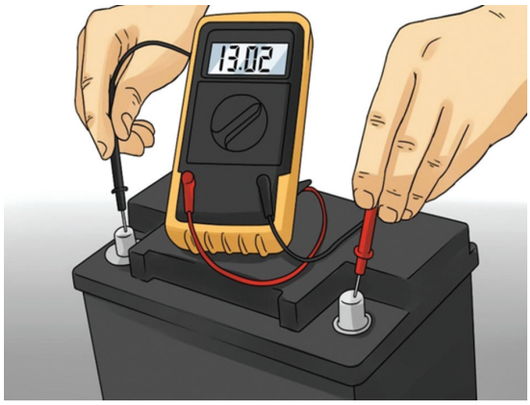



Figure 2.3.4(k) Cell Tester

2.3.5 Pneumatic Tools

2.3.5(a) Spray Painting Equipment

Spray painting equipment is used to paint the vehicle in an uniform manner with the help of air compressor. Air compressor is used in service station to clean the vehicle, by blowing the water in pressurized way. Fig 2.3.5(a) shows Spray Painting Equipment.

AM_Unit_02.indd 43 12/20/2019 4:25:29 PM



Figure 2.3.5(a) Spray Painting Equipment

2.3.5(b) Grease Gun

Grease gun is used in automotive vehicle to reduce the friction in the moving parts by applying the pressurized grease. This is done with the aid of air compressor. It is also used to fix a new lining in the top portion of the brake shoe. Fig 2.3.5(b) shows Grease Gun.



Figure 2.3.5(b) Grease Gun

2.3.5(c) Air Compressor

It is used in automatic machines where air pressure is required. This means by using this amount of air pressure required to restrict the passage is done. In added to this, it is used for to refill the air in the tire, paint, clean and water wash the vehicle. The amount of air which has been used for all this purpose is generated from the equipment which is named as an air compressor. Fig 2.3.5(c) shows Air Compressor.



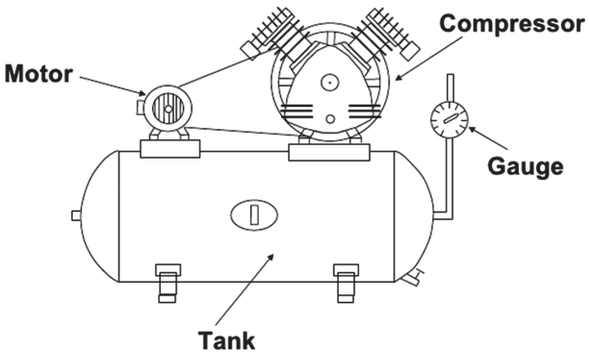

Figure 2.3.5(c) Air Compressor

2.3.5(d) Vaccum Cleaner

The vaccum cleaner is a device which is used to wipe off the dusts deposited in the vehicle parts where the cleaning process is difficult to carried out manually. Fig 2.3.5(d) shows Vaccum Cleaner.

AM_Unit_02.indd 44 12/20/2019 4:25:29 PM



Figure 2.3.5(d) Vaccum Cleaner

2.3.6 Special Tools

2.3.6(a) Puller

The equipment which is used to remove the components like gear shaft and bearing which are closely fitted to the shafts in an easy manner is named as puller. Shown in Fig 2.3.6(a).



Figure 2.3.6(a) Puller

2.3.6(b) Piston Ring Expander

It is used to remove the piston rings which are fitted in the piston. Fig 2.3.6(b) shows Piston Ring Expander.



Figure 2.3.6(b) Piston Ring Expander

2.3.6(c) Piston Ring Compressor

The piston ring compressor is a special tool that is specifically designed for compressing the piston rings when a piston is re-installed. This is accomplished by opening the piston ring compressor enough so that the piston will slide into the opening. Then the rings compress by tightening the tool so that it is snug around the piston. Fig 2.3.6(c) shows Piston Ring Compressor.



Figure 2.3.6(c) Piston Ring Compressor

2.3.6(d) De-Greasing Plant

Mixture of steam and hydrochloric acid is act as a degreasing agent. With the use

AM_Unit_02.indd 45 12/20/2019 4:25:29 PM

of this agent, grease which is deposited in the metal parts can be wiped off.

2.3.6(e) Wheel Balancing Machine

Wheel balancing machine is used to balance the unbalanced weighted wheels which are located in the front and rear axle.

2.3.6(f) Spring Tester

Sometimes tensile strength of the spring is reduced at that time by using this spring tester, spring tensile strength is improved. Fig 2.3.6(f) shows Spring Tester.



Figure 2.3.6(f) Spring Tester

2.3.6(g) Nozzle Tester

It is used to measure the diesel particle size, diesel quantity and leakages of the diesel which is coming out from the nozzle while blowing the diesel in high pressure at the end of the compression stroke inside the engine. Fig 2.3.6(g) shows Nozzle Tester.



Figure 2.3.6(g) Nozzle Tester

2.3.7 Screw Jack and Horses

Jack is used to lifting the heavyweight components which are not possible to lift with the use of hands. Fig 2.3.7(a) shows the diagram of Screw Jack.

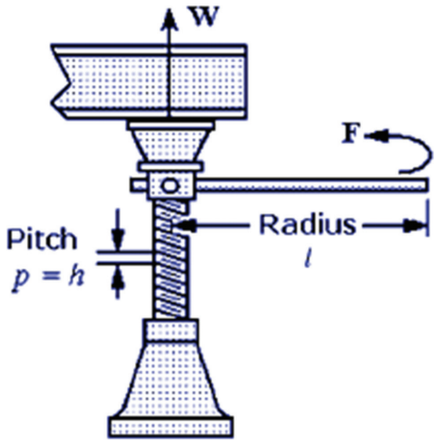



Figure 2.3.7(a) Screw Jack

AM_Unit_02.indd 46 12/20/2019 4:25:30 PM



Bureau of Indian Standards



The Bureau of Indian Standards (BIS) is the national Standards Body of India working under the aegis of Ministry of Consumer Affairs, Food & Public Distribution, Government of India.

It is established by the Bureau of Indian Standards Act, 1986 which came into effect on 23 December 1986.

The Minister in charge of the Ministry or Department having administrative control of the BIS is the ex-officio President of the BIS.

The organisation was formerly the Indian Standards Institution (ISI), set up under the Resolution of the then Department of Industries and Supplies No. 1 Std.(4)/45, dated 3 September 1946. The ISI was registered under the Societies Registration Act, 1860.

As a corporate body, it has 25 members drawn from Central or State Governments, industry, scientific and research institutions, and consumer organisations.

Its headquarters are in New Delhi, with regional offices in Kolkata, Chennai, Mumbai, Chandigarh and Delhi and 20 branch offices. It also works as WTO-TBT enquiry point for India.

Construction

Its shaft is made of with cast iron material. By keeping the gravitational nature in mind, the jack basement is designed. The top portion of the main shell fixed with rotating block. Rotating block consists of with holes through which the handles are fixed and we can rotate it freely. A support is attached to the square thread rod.

Function

At first, screw jack has to be placed below the lifted component. Depends on the nature of the soil and the requirement of height to be lifted, it has been supported by the wooden sleeper. Then by fixing the handle on the holes in the rotating block and rotating the handle, the vehicle will be lifted to the required height and work under the vehicle will be carried out. After finishing the work, again by rotating the handle in anti-clockwise direction vehicle will be grounded.

Capacity

Screw jack capacity is mentioned by maximum weight it can withstand. It is specified in terms of tonnage. It has to be lifted based on the given specification. If it is operated to lift more load than the specification, then severe damages will occur. Lubrication should be properly done to the moving and rotating parts.

AM_Unit_02.indd 47 12/20/2019 4:25:30 PM

- It is used to lift the four-wheeler to a certain height.
- The vehicle is lifted and supported by the use of this screw jack.
- With the help of this, damages on the bottom side of the vehicle are cleared and it is available in many sizes depends on the weight of the vehicle.

Horses

After lifting the screw jack to a certain height, horses have to be lifted to the same level and then the cotter pin has to be inserted. With the use of this horse, the screw jack has been removed.

It has been used depends on the weight of the vehicle. For to support the vehicle with high load, low load capacity horse should not be used. Fig 2.3.7(b) shows the diagram of Horse.



Figure 2.3.7(b) Horses

2.3.8 HYDRAULIC POWER TOOLS

In automobile industries, the work should be carried out in careful and in an unmistakable manner. In doing that, small defects in the vehicles are repaired by using hand tools. In sometimes, large defects are repaired by removing the particular defected components from the vehicle and moving down the removed components to the ground or to the bench and then repaired. Similarly, sometimes the parts located below the chassis have to be repaired, that time the vehicle is lifted to a particular height and then repaired. For this purpose, power tools are used in the automotive industries. This is due to that weight of the vehicle is high and repairing the components underneath the vehicle is complicated and too risky. Power tools are utilized depends on the nature of work. The following are some classification of power tools.

2.3.8(a) Hydraulic Crane

It is used to lift and unlift the heavy weight components like engine in an automotive vehicle and to shift the heavy weight components from one place to another place. Fig 2.3.8(a) shows Hydraulic Crane.



Figure 2.3.8(a) Hydraulic Crane

2.3.8(b) Hydraulic Jack

It works on the basic principle of Pascal's law. It is used to hold the heavyweight components in particular height and to move

AM_Unit_02.indd 48 12/20/2019 4:25:30 PM

the heavyweight objects from one place to another place. Components with low load can be lifted easily in hand. But it is not possible to repair the tire of the heavy load carrying capacity vehicle by lifting the vehicle in hand. For this hydraulic jack is used. It works on the hydraulic pressure. Based on this principle, some vehicles are used (eg. JCP, Crane, Bull Dozer). The hydraulic jack is used to lift the vehicle while water washes the vehicle. Hydraulic jack working is explained in the schematic diagram. Fig 2.3.8(b) shows the diagram of Hydraulic Jack.



Figure 2.3.8(b) Hydraulic Jack

2.3.8(c) Hydraulic Press

It is used to straightening the bent portion in the flat, round and tube components. It works on the principle of Pascal's law. It used in automation industries, for repairing the misaligned curved portion in the chassis, steering, and in-vehicle fork. It is used to fix the bearings which have been used on the automatic machines. Fig 2.3.8(c) shows Hydraulic Press.

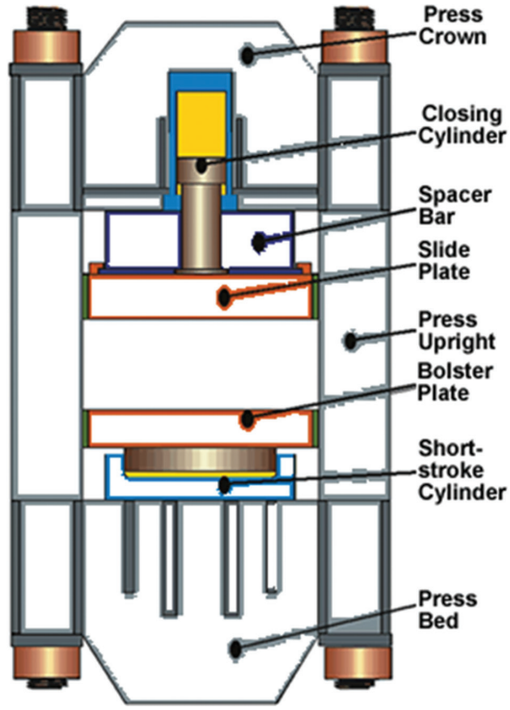

Figure 2.3.8(c) Hydraulic Press

2.3.8(d) Hydraulic jack puller

This equipment is used in the automation industries for to remove the closely fitted bearing by without having any damage in the bearing. Figure 2.3.8(d) shows the diagram of Hydraulic Jack Puller.

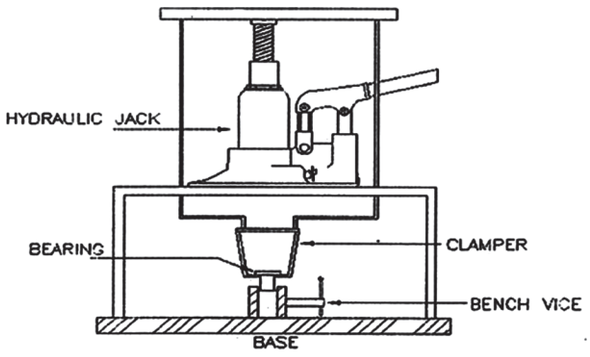

Figure 2.3.8(d) Hydraulic Jack Puller

AM_Unit_02.indd 49 12/20/2019 4:25:30 PM

Student Activity

1. Students should be taken to the nearby service station to learn the handling of mechanical instruments and industrial tools.
2. Students should visit any Government authorised central workshops to learn the process of drilling, overhead crane transport of materials as per the planned schedule of flow and should submit a report on it.

Glossary

Instruments	-	உபகரணங்கள்
Temperature	-	தட்பவெப்பநிலை
Measurements	-	அளவிடுதல்
Adjustable	-	சரிசெய்தல்
Tubular	-	குழாய்
Grinding	-	அரைத்தல்
Vulcanizing	-	துளை அடைத்தல்
Hydraulic	-	திரவ நிலை
International	-	சர்வ தேசம்
Standardisations	-	தர நிர்ணயம்

References

1. Jain R.K., “Engineering Metrology”, Khanna Publishers, 2005.
2. Alan S. Morris, “The Essence of Measurement”, Prentice Hall of India, 1997.
3. Gupta S.C, “Engineering Metrology”, Dhanpat rai Publications, 2005.
4. Jayal A.K, “Instrumentation and Mechanical Measurements”, Galgotia Publications 2000.
5. Beckwith, Marangoni, Lienhard, “Mechanical Measurements”, Pearson Education, 2006.
6. Donald Deckman,“Industrial Instrumentation”, Wiley Eastern, 1985.

AM_Unit_02.indd 50 12/20/2019 4:25:30 PM

Webliography

1. https://www.iso.org/standards.html
2. http://www.bis.gov.in/
3. https://www.asme.org/
4. https://law.resource.org/pub/in/bis/manifest.med.html
5. https://en.wikipedia.org/wiki/Automotive_Industry_Standards
6. https://www.araiindia.com/downloads.aspx
7. https://en.wikipedia.org/wiki/Measuring_instrument
8. https://www.marineinsight.com/tech/different-types-of-mechanical-measuring-tools-and-gauges-used-on-ships/
9. https://books.google.co.in/books?id=FV-aCgAAQBAJ&printsec=frontcover&dq=tools+and+measuring+instruments&hl=en&sa=X&ved=0ahUKEwi38_yiyITZAhUKpY8KHXkBCNsQ6AEIOjAE#v=onepage&q=tools%20and%20measuring%20instruments&f=false
10. https://books.google.co.in/books?id=BLbWp8Xr8LYC&dq=tools+and+measuring+instruments&hl=en&sa=X&ved=0ahUKEwi38_yiyITZAhUKpY8KHXkBCNsQ6AEIUTAI
11. https://books.google.co.in/books?id=GiwmkAEACAAJ&dq=tools+and+measuring+instruments&hl=en&sa=X&ved=0ahUKEwi38_yiyITZAhUKpY8KHXkBCNsQ6AEIQDAF
12. https://books.google.co.in/books?id=WREKAAAAIAAJ&printsec=frontcover&dq=tools+and+measuring+instruments&hl=en&sa=X&ved=0ahUKEwi38_yiyITZAhUKpY8KHXkBCNsQ6AEISzAH#v=onepage&q=tools%20and%20measuring%20instruments&f=false

28UYA

AM_Unit_02.indd 51 12/20/2019 4:25:30 PM

SAMPLE QUESTIONS

Choose the correct answer:

1. Which principle is used in the Hydraulic Jack?
   a) Pascal law
   b) Newton law
   c) Lever principle
2. Which one is measured by Hydro meter?
   a) Voltage
   b) Density of Electrolyte
   c) Current
3. Honing machine is used to
   a) to drill the cylinder
   b) to enlarge the hole in cylinder
   c) to finish the cylinder bore accurately
4. Which device is used to check the spark intensity in petrol engine?
   a) Spark plug tester
   b) Cell tester
   c) Battery tester
5. R.P.M.gauge is used to
   a) to measure the speed of engine
   b) to measure the speed of vehicle
   c) to calculate the milage

Answer the following questions:

1. What are the Simple or Ordinary Hand Tools?
2. Name the various types of Power Tools.
3. Explain about the Bench Tools.
4. What are the types of Files?
5. What are the types of Hammers?
6. What are the different types of Punches?
7. Mention any five sizes of Double Ended Spanners.
8. Mention any five sizes of Ring Spanners.
9. Mention any five sizes of Box Spanners.
10. Name the different types of Pliers.
11. What is meant by Volt Meter?
12. What is the use of Ammeter?
13. What is the use of Hydro Meter?
14. What are the uses of Wire Gauge?
15. Explain about R.P.M.Gauge.
16. Explain about Oddo Meter.
17. What is meant by Pressure Gauge?
18. Explain the uses of Timing Light.
19. Explain the uses of Puller.
20. What are the uses of Screw Jack?
21. What are the uses of Air Compressor?

AM_Unit_02.indd 52 12/20/2019 4:25:30 PM

Unit 3 Fuels and their Types

Contents

3.0 Introduction
3.1 Fossil Fuels
- 3.1.1 Solid Fuels
- 3.1.2 Liquid Fuels
  - 3.1.2.1 Petrol and Its Properties
  - 3.1.2.2 Diesel and Its Properties

3.2 Alternative Fuels
- 3.2.1 Alternative Liquid Fuels
  - 3.2.1.1 Alcohol
  - 3.2.1.2 Methanol
  - 3.2.1.3 Ethanol
  - 3.2.1.4 Bio Diesel
- 3.2.2 Gaseous Fuels
  - 3.2.2.1 Liquified Petroleum Gas (LPG)
  - 3.2.2.2 Liquified Natural Gas (LNG)
  - 3.2.2.3 Compressed Natural Gas (CNG)
  - 3.2.2.4 Hydrogen

3.3 Comparison of Various Fuels
3.4 Distillation Curve

AM_Unit_03.indd 53 12/20/2019 4:27:42 PM

Learning Objectives

- To learn the usage and importance of various types of fuels.
- To learn about various solid, liquid and gaseous fuels.

3.0 INTRODUCTION

For a healthy body, we consume solid food, liquid food and pure air. Similarly, for an engine to operate, it requires fuel.The heat energy released during burning the fuel with air, is converted into mechanical energy via a heat engine. This mechanical energy gives the required tractive force to move the vehicle in the forward direction.



Figure 3.1.1 Solid Fuels

3.1 FOSSIL FUELS

Fossils fuels are available as Solid, Liquid and Gaseous state. Figure 3.1 shows Fossil Fuels.



Figure 3.1 Fossil Fuels

3.1.1 Solid Fuels

Solid fuel refers to various types of solid material that are used as fuel to produce energy and provide heating, usually released through combustion. Solid fuels include wood, coalare mining under the earth. Initially solid fuels are used in steam engines and boilers. They release less heat energy and emit more ash and emissions. However, the solid fuels are not used in modern automobiles. Figure 3.1.1 shows Solid Fuel.

3.1.2 Liquid Fuels

Many liquid fuels play a primary role in transportation. Liquid fuels are easy to store, easy to transport, and can be handled with relative ease. They release more heat energy and less emission. Petrol and Diesel fuels are widely used for automobiles. Figure 3.1.2 shows Liquid Fuels.



Figure 3.1.2 Liquid Fuels

AM_Unit_03.indd 54 12/20/2019 4:27:43 PM

PETROLEUM

Robert Chesebrough



Robert Augustus Chesebrough, (January 9, 1837 – September 8, 1933) was an American chemist.

He discovered petroleum jelly which he marketed as Vaseline and he founded the Chesebrough Manufacturing Company.

Chesebrough began his career as a chemist clarifying kerosene from the oil of sperm whales.

The discovery of petroleum in Titusville, Pennsylvania, rendered his job obsolete, so he traveled to Titusville to research what new materials might be created from the new fuel.

This led to his discovery of petroleum jelly, which he trade-named as Vaseline.

In 1875, he founded the Chesebrough Manufacturing Company that in 1955 became Chesebrough-Ponds, a leading manufacturer of personal-care products. Chesebrough patented the process of making petroleum jelly (U.S. Patent 127,568) in 1872.



3.1.2.1 Petrol and Its Properties

Most liquid fuels are derived from the fossilized remains of dead plants and animals by exposure to heat and pressure in the Earth's crust.From the crude oil, by distillation process, various components like Liquid Petroleum Gas (at 40°C), petrol (40°C to 200°C), Diesel (250°C to 300°C) and residue tar (above 350°C) are extracted. Figure 3.1.2.1 shows the distilation process of various components useages.

Petrol, also known as Gasoline, is a transparent fuel derived from crude oil and is used as fuel in internal combustion engines. Petrol is separated from crude oil from 40°C to 200°C. Petrol is usually a blend of paraffin's, naphthenic, aromatics and olefins. Figure 3.1.2.1(a) shown the Line Diagram of Distilation Process of Various Components.

Table: Chemical composition of petrol by weight

Element	Percentage by weight
Carbon	79.5 – 87.1
Hydrogen	11.5 – 14.8
Sulphur	0.1 – 3.5
Oxygen	0.1 – 0.3
Nitrogen	0.1 – 2.0

The following are the properties of petrol:

AM_Unit_03.indd 55 12/20/2019 4:27:43 PM

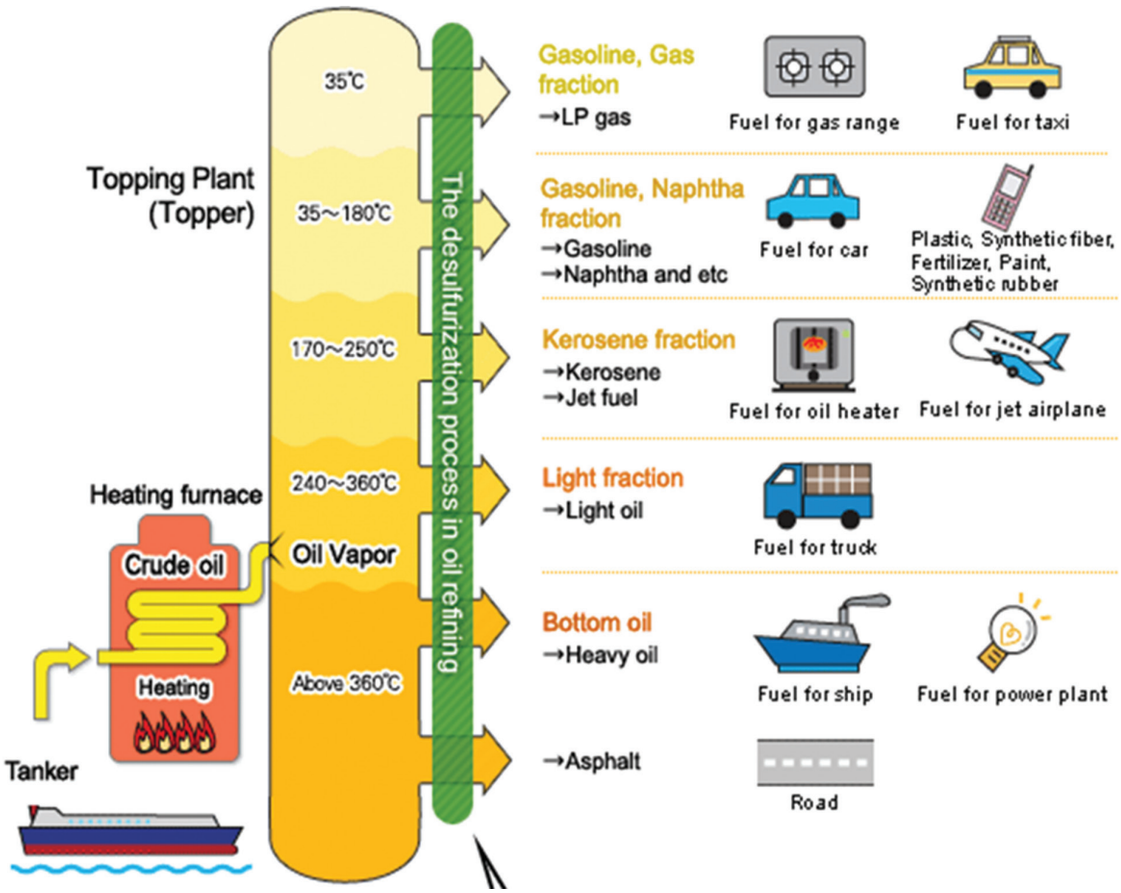

Figure 3.1.2.1 Distilation Process of Various Components Useages

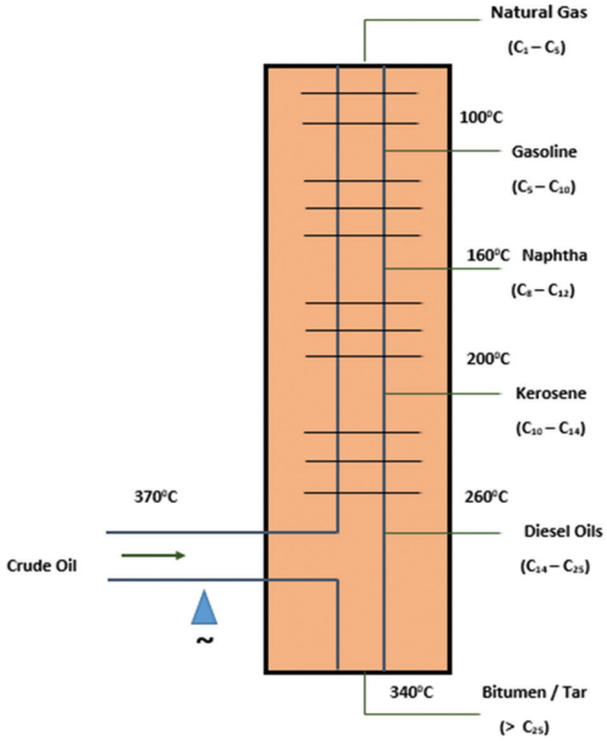

Figure 3.1.2.1(a) Line Diagram of Distilation Process of Various Components.

In petrol have Carbon 79.5% to 87.1%, Hydrogen 11.5% to 14.8%, Sulphur 0.1% to 3.5%, Oxygen and Nitrogen 0.1% to 0.3% and the following special properties are must be in petrol.

1. **Volatility:** Volatility refers to the tendency of fuel to vaporize from liquid state to gaseous state. Boiling Point is an indicator of volatility. Higher the boiling point, the less volatile the fuel. A highly volatile fuel is more likely to form a flammable. Petrol should be sufficiently volatile to form combustible vapor. Petrol must be sufficiently volatile to evaporate at low temperature, for easy starting of the engine, but not so volatile as to evaporate in fuel lines, causing vapor lock and thus preventing flow of liquid fuel.

AM_Unit_03.indd 56 12/20/2019 4:27:43 PM

2. **Specific Gravity:** Specific gravity is the ratio of the density of a substance to the density of a reference substance (usually water). Specific gravity of petrol should be 0.70 to 0.78
3. **Calorific Value:** The amount of heat energy produced by the complete combustion when burning 1 kg of a fuel. The calorific value of petrol is 45.8 MJ/kg.
4. **Flash and Fire Point:** The fire point of a fuel is the lowest temperature at which the vapor of that fuel will continue to burn for at least 5 seconds after ignition by an open flame. Generally flash point should be high for the fuel. The fire point of a fuel is the temperature at which the vapor produced by that given fuel will continue to burn for at least 5 seconds after ignition by an open flame. In general the fire points can be assumed to be about 15°C - 20°C higher than the flash points. For petrol, at least 10% of fuel should be burn instantly and rest in staged phase.
5. **Viscosity:** Resistance to the flow is called as Viscosity and it should be low.
6. **Sulphur Content:** Sulphur will corrode and damage the metal parts. During engine operation, Sulphur combines with oxygen to form Sulphur-di-oxide and in presence of water, it forms sulphurous acid. Hence, Sulphur content should be less than 0.1%
7. **Moisture and Sediment Content:** Petrol fuel should be free from Moisture and Sediment Content.
8. **Octane Number:** This is a measure of auto Ignition resistance in a spark-ignition engine. It represents the volume percentage of iso-octane (C_8H_{18}) in a iso-octane (C_8H_{18}) / n-heptane (C_7H_{16}) mixture. Higher the rating, higher the resistance to knock.A higher rating does not indicate more power but fuel can be used in higher compression ratio. The value of Octane number for the available fuel is between 85 to 90.

3.1.2.2 Diesel and Its Properties

Diesel fuel is the light oil and is obtain from crude oil by the distillation process at a temperature of 250°C – 300°C. Diesel consists of 85% carbon, 12% Hydrogen and 3 % others by weight. These have a boiling point between 250°C and 350°C. Diesel contains more energy than petrol. A diesel engine can be up to 40% more efficient than a spark-ignited petrol engine with the same power output and hence it is widely used in cars, trucks, buses, railway engines etc., The following are the required properties of diesel.

1. **Volatility:** The volatility of diesel is less than petrol. The volatility of diesel fuel influences density, auto ignition temperature, flash point, viscosity and cetane number. High volatility promotes vapor lock and low volatility component may not burn completely, thereby increasing smoke deposits.
2. **Specific Gravity:** Specific gravity of diesel is higher than petrol and the value should be 0.82 to 0.92
3. **Calorific Value:** The amount of heat energy produced by the complete combustion when burning 1 kg of a fuel. The calorific value of diesel is slightly lesser than petrol and the value is 45.5 MJ/kg
4. **Viscosity:** The viscosity is a measure of the resistance to flow of the fuel.

AM_Unit_03.indd 57 12/20/2019 4:27:43 PM

It will decrease as the temperature increases. A high viscosity fuel may cause extreme pressures in the injection systems and will cause reduced atomization and vaporization of the fuel spray. The viscosity of diesel fuel must be low enough to flow freely at its lowest operational temperature, yet high enough to provide lubrication to the moving parts of the finely machined injectors. The fuel must also be sufficiently viscous so that leakage at the pump plungers and dribbling at the injectors will not occur. Viscosity also will determine the size of the fuel droplets, which, in turn, govern the atomization and penetration qualities of the fuel injector spray.

5. **Sulphur Content:** The sulphur in fuel will cause wear of the internal components of the engine, such as piston ring, pistons, valves, and cylinder liners. In addition, a high sulphur content fuel requires that the engine oil and filter be changed more often. This is because of formation of acids when sulphur-di-oxide formed during combustion combines with water vapor. The Sulphur content should be less than 0.5%
6. **Moisture and Sediment Content:** Cleanliness is an important characteristic of diesel fuel. Fuel should not contain any foreign substances, otherwise, fuel pump and injectors will have poor performance moisturizer. Moisture in the fuel can also damage or cause seizure of injector parts when corrosion occurs.
7. **Cetane Number:** The principal measure of diesel fuel quality is its cetane number. A cetane number is a measure of the delay of ignition of a diesel fuel. Higher the cetane rating, the easier the engine will start and the combustion process will be smoother within the ratings specified by the engine manufacturer. It denotes the percentage by volume of cetane (chemical name Hexadecane) in a combustible mixture containing cetane and 1-methylnapthalene. Current diesel fuels have a cetane rating between 45 and 50.

3.2 ALTERNATIVE FUELS

The sources of fossils fuels are depleting and they are not renewable. At the same time the market requirements of this fuels are increasing day by day. Hence, alternative fuels are highly essential. Alternative fuels, known as non-conventional fuel, there are many materials or substances that can be used as fuels, other than fossil fuels like petrol, diesel. Some well-known alternative fuels include biodiesel, bioalcohol (methanol, ethanol, butanol), chemically stored electricity (batteries and fuel cells), hydrogen, non-fossil methane, non-fossil natural gas, vegetable oil, propane etc.,

3.2.1 Alternative Liquid Fuels

3.2.1.1 Alcohol

In recent days, Alcohols can be considered as the best alternative fuels. Methanol and ethanol are of high interest as fuels can be produced chemically or biologically. And they have characteristics which allow them to be used in internal combustion engines. The octane ratings are higher leads to less hydrocarbon emission. Also Sulphur content is less. Figure 3.2.1.1 shown Alcohol chemical bond.

AM_Unit_03.indd 58 12/20/2019 4:27:43 PM

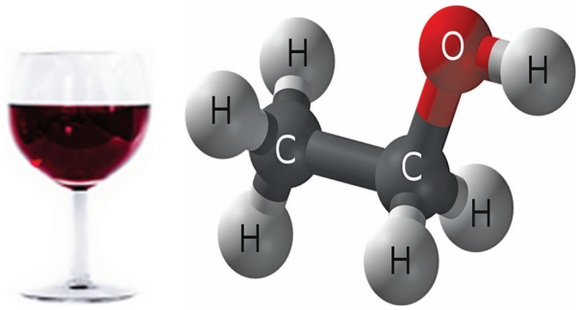

Figure 3.2.1.1 Alcohol Chemical Bond

3.2.1.2 Methanol

Methanol, also known as wood alcohol, can be used as an alternative fuel. M85 (a blend of 85 % methanol and 15 % gasoline) and M10 (a blend of 10% methanol and 90% gasoline) are used as fuel and emissions are lower than conventional vehicles. It has high octane number. Methanol is cheap to produce and has a lower risk of flammability when compared to petrol. The cost of fuel is low. However, methanol is corrosive. Fig 3.2.1.2, 3.2.1.2(a) shows Storage of Methanol and Methanol Unit respectively.



Figure 3.2.1.2 Storage of Methanol

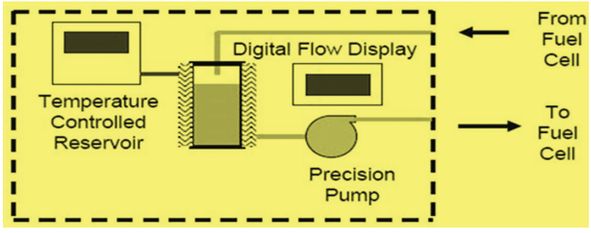

Methanol-unit

Figure 3.2.1.2(a) Methanol Unit

3.2.1.3 Ethanol

Ethanol is also called as Ethyl alcohol. Ethanol can be produced by fermenting and distilling crops such as corn, barley or wheat. In India, Ethanol is extracted from molasses of sugarcane. It can be blended with gasoline to increase octane levels and improve emissions quality. E85 (a blend of 85 % ethanol and 15 % gasoline) and E10 (a blend of 10% ethanol and 90% gasoline) are used as fuel. Fig 3.2.1.3 shows the Carbon Cycle.

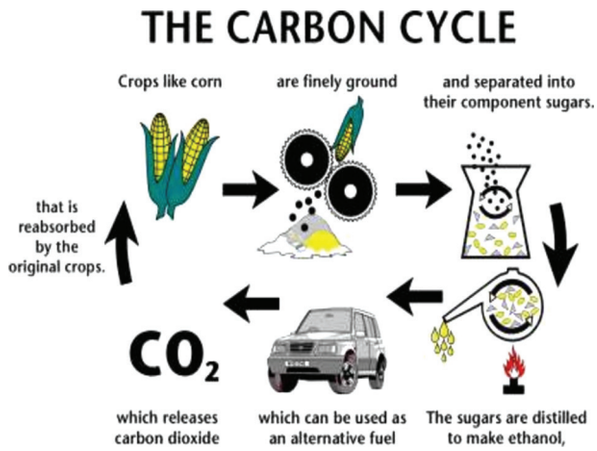

Figure 3.2.1.3 The Carbon Cycle

3.2.1.4 Bio Diesel

Bio diesel is a domestically produced, renewable fuel that can be manufactured from vegetable oils, animal fats, for use in diesel vehicles. Biodiesel can also be blended with diesel and used in unmodified engines. B20 (i.e 20% biodiesel blended with diesel) is a most common biodiesel blend. B20 has good balance of cost, emissions, cold-weather performance, materials compatibility, and ability to act as a solvent. Biodiesel is safe, biodegradable, reduces air pollutants associated with vehicle emissions, such as particulate matter, carbon monoxide and hydrocarbons. Fig 3.2.1.4 shown Bio Diesel Production Process Cycle.

AM_Unit_03.indd 59 12/20/2019 4:27:44 PM

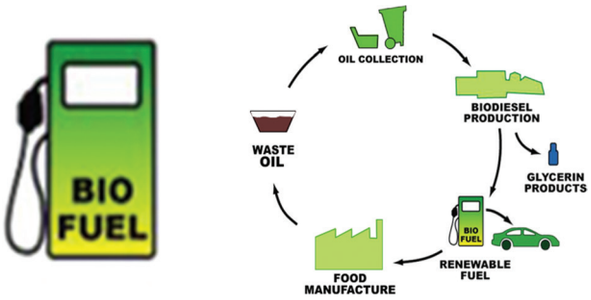

Figure 3.2.1.4 Bio Diesel Production Process

3.2.2 Gaseous Fuels

The gaseous fuels are readily mix with atmospheric air without delay and it is inducted in engine. The following gaseous fuels are presently in use.

3.2.2.1 Liquified Petroleum Gas (LPG)

Liquified petroleum gas (LPG) also called as Propane is a by product of natural gas processing and crude oil refining. LPG is widely used as a fuel for domestic cooking and heating and now it is also a popular alternative fuel for vehicles. It is stored under pressure (100psi or 680 atm) inside a special tank and is a colorless, odorless liquid. As pressure is released, the liquid propane vaporizes and turns into gas that is used in combustion.An odorant, ethyl mercaptan, is added for leak detection.Propane has a high-octane rating, making it an excellent choice for spark-ignited internal combustion engines. It provides uniform homogenous mixture for all cylinders. The carbon content in LPG is less than petrol and hence, LPG vehicles can produce lower amounts of harmful air pollutants and greenhouse gases, CO_2. The operating cost of the vehicle is reduced by 50%. The use of LPG enhances engine life. Refer Figure 3.2.2.1.



Figure 3.2.2.1 Liquified Petroleum Gas

3.2.2.2 Liquified Natural Gas (LNG)

Liquified natural gas (LNG), is natural gas in its liquid form. LNG is produced by purifying natural gas and super-cooling it to -161°C to turn it into a liquid. During the process known as liquefication, natural gas is cooled below its boiling point, removing most of the extraneous compounds found in the fuel. The remaining natural gas is primarily methane (98%) with small amounts of other hydrocarbons.

The specific gravity of LNG is higher than CNG. The calorific value of LNG is 48MJ/kg and its octane value are 110. Because of LNG's relatively high production cost as well as the need to store it in expensive cryogenic tanks, the commercial applications of LNG has been limited. Refer Figure 3.2.2.2.

3.2.2.3 Compressed Natural Gas (CNG)

Natural gas is primarily extracted from gas and oil wells. Natural gas is an odorless and it is a mixture of hydrocarbon, mainly 95% of methane and 5% of other components like butane, propane, ethane,

AM_Unit_03.indd 60 12/20/2019 4:27:44 PM

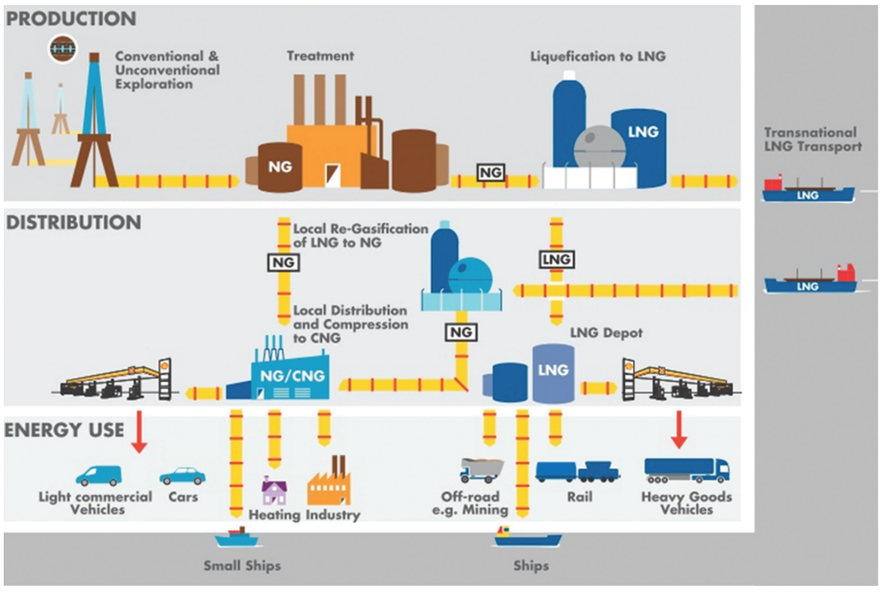

Figure 3.2.2.2 Liquified Natural Gas Plant

water vapor etc., Natural gas are stored in tanks under pressure and hence it is called as compressed natural gas. Octane rating is high. Cars and trucks with specially designed engines produce fewer harmful emissions than gasoline or diesel. CNG fuel systems are completely sealed, the vehicles produce no evaporative emissions. Operating cost of the vehicle is low. Figure 3.2.2.3 shown Compressed Natural Gas Filling Station.

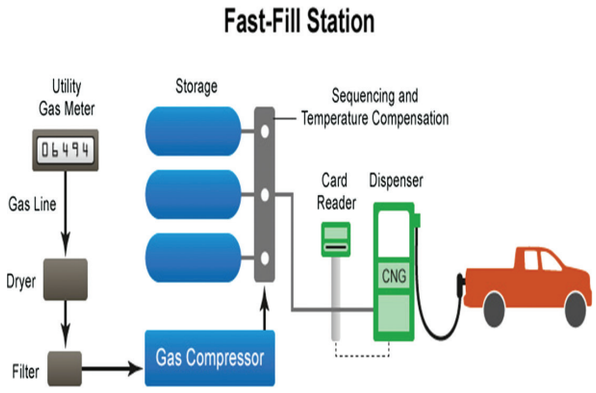

Figure 3.2.2.3 Compressed Natural Gas Filling Station

3.2.2.4 HYDROGEN

Many test engines have been developed to use Hydrogen as an alternative fuel. Hydrogen can be produced from diverse domestic resources. Hydrogen is abundant in our environment. It's stored in water

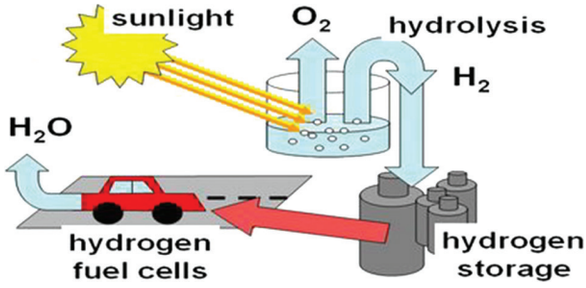

Figure 3.2.2.4 Hydrogen Preparing and Filling Process

(H_2O), hydrocarbons (such as methane, CH4), and other organic matter. One of the challenges of using hydrogen as a fuel comes from being able to efficiently extract it from these compounds. Hydrogen is also used in zero-emission electric vehicles that run on electricity generated by fuel-cell by the petrochemical reaction. Hydrogen is environmental freely. Figure 3.2.2.4 shown Hydrogen Preparing and Filling Process.

AM_Unit_03.indd 61 12/20/2019 4:27:44 PM

3.3 COMPARISON OF VARIOUS FUELS

Commercially fuels are available in different grades like Unleaded Petrol, Speed Petrol, White Petrol, Diesel, Speed Diesel or Premium Diesel etc., Previously, Tetra Ethyl Lead (TEL) is mixed with petrol to increase the octane rating (for antiknocking). However, the lead emission emit from the vehicle is polluting the atmosphere and lead is also poisonous. Hence addition of TEL in petrol is banned and this petrol is called as Unleaded petrol. Various additives are added with fuel to enhance the properties. Such petrol will have high octane rating and called as Speed petrol or premium petrol. Similarly, additives are added with diesel to enhance the cetane rating and such diesel is called as Speed Diesel or Premium Diesel.

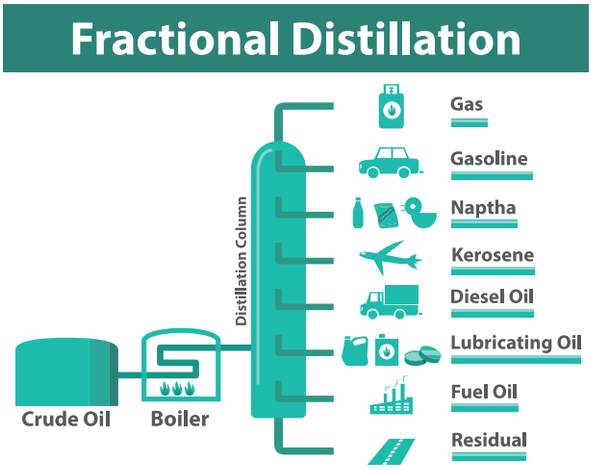

Figure 3.4 Fractional Distillation Process.

3.4 DISTILLATION CURVE

From the above curve, it is understood that the most volatile parts of the gasoline evaporate at lower temperature. This petrol vapor is mixes with air and makes the engine to start easy at cold condition. As the working temperature increases, the less volatile parts evaporate and mixes with air. Based on the distillation graph, the required additives during summer and winter season, can be added with fuel to ensure smooth operation of engine. Fig 3.4, 3.4(a) shows Distillation Curve and Fractional Distillation Process.

V4AYQ

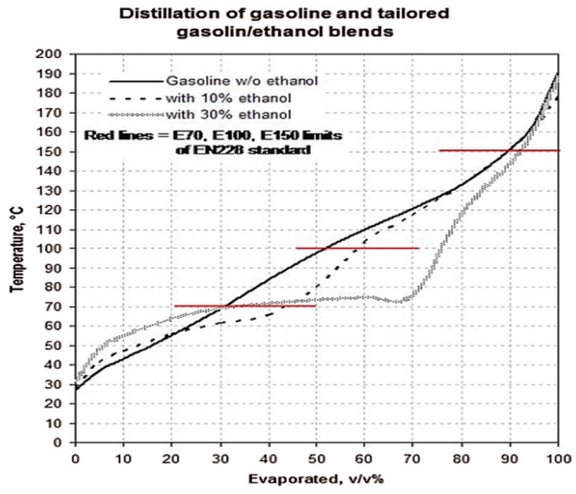

Figure 3.4(a) Distillation Curve-(% of Evaporation Vs Temperature °C)

AM_Unit_03.indd 62 12/20/2019 4:27:45 PM

Student Activity

1. Students should visit the nearby petrol bunks to study the usage and applications of gaseous and liquid fuels and should submit a report on it.
2. Students should visit the nearby petrol bunk and should note down the change in cost of petrol, diesel and coolant oil per litre respectively for seven days from the start of the task and should submit a report on it.
3. Students should learn the importance of octane and cetane number.

Glossary

Colorific Value	-	வெப்பமதிப்பு
Cryogenic	-	கடுங் குளிர்வியல்
Flash Point	-	வெடிப்பு நிலை
Fire Point	-	எரிநிலை
Viscosity	-	பிசுபிசுப்புத்தன்மை
Moisture	-	ஈரப்பதம்
Sediment	-	வீழ்படிவு
Crude Oil	-	கச்சா எண்ணெய்
Unleaded Petrol	-	ஈயம் கலக்கப் படாத பெட்ரோல்
Distillation Curve Diagram	-	வடிகட்டி பிரித்தல் நிலையின் வளைவு வரைபடம்

References

1. Rajput R.K. Internal Combustion Engines, Laxmi Publications (P) Ltd, 2002.
2. Rai G.D., “Non-conventional energy sources”, Khanna publishes, 1993.
3. Khandelwal K.C., Mahdi S.S., “Biogas Technology - A Practical Handbook”, Tata McGraw Hill, 1986.
4. David Boyles, “Bio Energy Technology Thermodynamics and costs”, Ellis Hoknood Chichester, 1984.
5. Mahaeswari R.C., “Bio Energy for Rural Energisation”, Concepts Publication,1997.

AM_Unit_03.indd 63 12/20/2019 4:27:45 PM

Webliography

1. https://en.wikipedia.org/wiki/Fuel
2. http://powermin.nic.in/
3. http://petroleum.nic.in/
4. http://www.pngrb.gov.in/
5. https://www.world-petroleum.org/
6. http://www.iip.res.in/
7. https://en.wikipedia.org/wiki/Indian_Oil_Corporation
8. http://www.fipi.org.in/
9. http://www.api.org/
10. https://books.google.co.in/books?id=oss907r__30C&pg=PA251&dq=Petroleum+Production+Systems+by+Dr.+Abdus+Satter&hl=en&sa=X&ved=0ahUKEwjs4vnMzYTZAhVCso8KHdx7BRQQ6AEIKDAA#v=onepage&q=Petroleum%20Production%20Systems%20by%20Dr.%20Abdus%20Satter&f=false

AM_Unit_03.indd 64 12/20/2019 4:27:45 PM

SAMPLE QUESTIONS

Choose the correct answer:

1. Why the Solid fuels are not used in Automobile Engines?
   a) Scarcity of Fuel
   b) Higher fuel cost
   c) Low heat energy and more ash and smoke
2. What type of liquid fuel used in Automobile Engines?
   a) Mineral Oil
   b) Vegetable Oil
   c) Animal Oil



3. The quality of which fuel is known by Octane number.
   a) Petrol
   b) Diesel
   c) LPG
4. The quality of which fuel is known by Cetane number
   a) Petrol
   b) Diesel
   c) LPG
5. Which is the another name of Gasoline
   a) Petrol
   b) Diesel
   c) LPG

Answer the following questions:

1. Define Fuels.
2. Write any five properties of Petrol.
3. Define Octane Number.
4. Write any five properties of Diesel.
5. Define Cetane Number.
6. What is meant by LPG?
7. What are the properties of LPG?
8. What is meant by CNG? Mention the advantages of CNG.
9. What are the two different types of Heat Engines?
10. Define Clearance Volume.
11. Define Swept Volume.
12. What is Volumetric Efficiency?
13. What is Heat Efficiency?

AM_Unit_03.indd 65 12/20/2019 4:27:45 PM

Unit 4 History of Automobiles

Contents



4.0 Introduction
4.1 History of Automobile
4.2 Engine
4.2.1 External Combustion Engine
4.2.2 Internal Combustion Engine
4.2.3 Classification of Internal Combustion Engine
4.3 Technical Specification of the Engine
4.4 Royal Automotive Club Rating
4.5 Society of Automotive Engineers Rating

AM_Unit_04.indd 66 12/20/2019 4:36:42 PM

Learning Objectives

- To learn about the self-propelled vehicle with stage by stage improvement from past to present.

4.0 INTRODUCTION

4.1 HISTORY OF AUTOMOBILE

In the early days, the man began his journey by walking. Then he used animals like horse, elephant, camel, donkey for his journey. Wheels are the most ancient discovery for human kind. With the help of wheel, the mankind designed horse carriage, bullock cart for transportation of people and goods. As time has gone on, they have devised increasingly more effective and efficient methods of travel. The automobile made a dramatic change in the way people travel.

Leonardo da Vinci considered the idea of a self-propelled vehicle in the 15thcentury. In 1680, Sir Issac Newton discovered that if steam is sent out in the rear direction, the vehicle will move forward. In 1769, Nicolas-Joseph Cugnot of France was the constructor of the first true automobile. Cugnot's vehicle was a steam-powered tri cycle carrying four people, and run for 20 minutes at3.6 km per hour.

During the 18th century, James Watt invented the steam engine and it leads to many developments in road transportation. In 1801, Richard Trevithick of Great Britain invented a steam-powered road carriage. Following him, W.H. James invented the automobile running with different speed. Till then, the research was focused on the External combustion engine. In 1863, Jean-Joseph-Etienne Lenoir, a Belgian engineer invented the "horseless carriage" and it uses an internal combustion engine. This is the first commercially successful internal combustion engine. In 1867, Nikolaus August Otto, German engineer invented the four-stroke internal combustion engine. This engine is the first to efficiently burn fuel directly in a piston chamber.

Two-stroke internal combustion engine was invented by Sirclerk, a German scientist in 1880. In 1885, a German engineer, Karl Benz builds the first true automobile powered by a gasoline engine. It has three wheels and looked similar to a carriage. In 1886, Gottlieb Wilhelm Daimler and Wilhelm Maybach invent the first four-wheeled, four-stroke engine in Germany. It is known as the "Cannstatt-Daimler."

In 1892, Rudolf Diesel was a German thermal engineer, invented the internal-combustion engine that runs on diesel. In 1894, Benherd developed an automobile by placing the engine in the front part of the chassis.

AM_Unit_04.indd 67 12/20/2019 4:36:43 PM

Horsepower

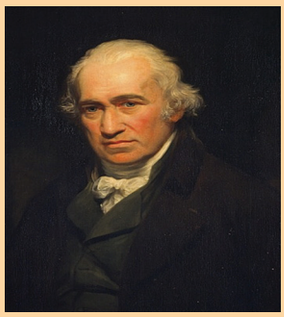

James Watt

The term was adopted in the late 18th century by Scottish engineer James Watt to compare the output of steam engines with the power of draft horses.

It was later expanded to include the output power of other types of piston engines, as well as turbines, electric motors and other machinery. When the steam engine began to do the work of horses in the mines during the early 1800s, the mine owners began to ask how many horses an engine would replace.

Watt measured the capability of a big horse to pull a load and found it could pull a weight of 150-pounds while walking at 2.5 miles per hour.

This works out to 33,000 foot-pounds per minute or 550 foot-pounds per second.

It was later expanded to include the output power of other types of piston engines, as well as turbines, electric motors and other machinery.

The definition of the unit varied among geographical regions. Most countries now use the SI unit watt for measurement of power.

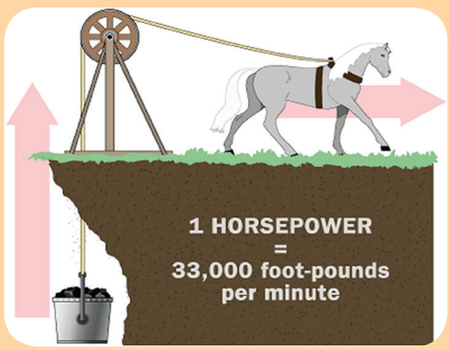

In 1900, a steering wheel is designed to replace the steering tiller and the vehicle was used for road transportation. In 1906, the first automobile was produced and sold. In 1908, henry ford manufactured 20000 cars. A lot of research and development had been made from 1910. In 1920, spark plug engine, water cooled engines are introduced.

Later, many vehicle manufacturers start begins to manufacture and sell their vehicle on the market. Many models based on the utility and usage has been introduced. Some of them include two-wheeler, three wheelers, passenger cars, luxury cars, buses, trucks etc.

4.2 ENGINE

The engine is the power plant of an automobile. A device which is used to convert one form of energy into mechanical energy is called an Engine. The heat energy produced by burning of the fuel is converted into mechanical power, then it is called a Heat Engine.

Heat engines are classified into two types.

1. External Combustion Engine
2. Internal Combustion Engine

AM_Unit_04.indd 68 12/20/2019 4:36:43 PM

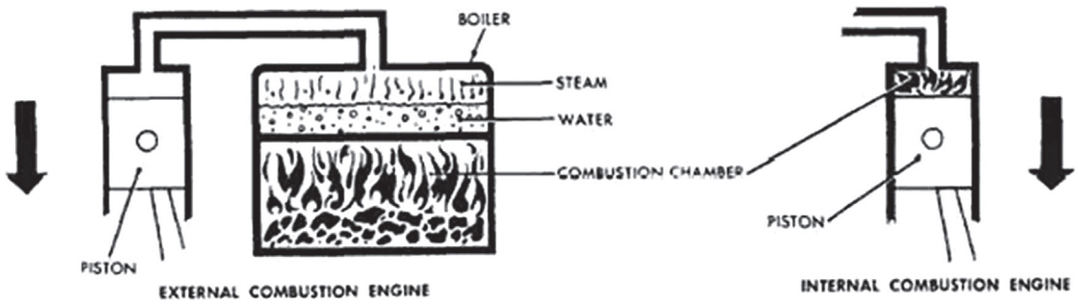

Figure 4.2

4.2.1 External Combustion Engine

An external combustion engine is a heat engine where a working fluid, is heated by combustion in an external source like Boiler. The fluid then, by expanding and acting on the mechanism of the engine, produces motion and usable work.

In external combustion engines, the combustion process takes place outside the mechanical engine system. External Combustion Engines are used in the following.

Ancient Marine Engine

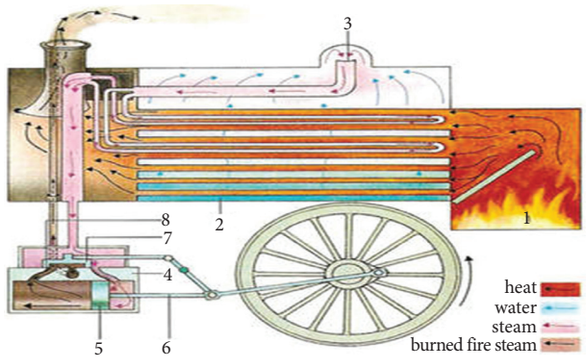

Ancient Road Roller Engine

Steam Locomotive

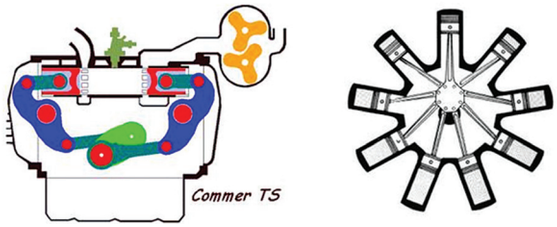

Figure 4.2.1

4.2.2 INTERNAL COMBUSTION ENGINE

An internal combustion engine (ICE) is a heat engine where the combustion of a fuel and air occurs inside the engine combustion chamber that is an integral part of an engine.

4.2.3 Classification of Internal Combustion Engine

Internal Combustion Engines are classified in many different ways as follows

1. According to the Cycle of Operation
   a) Otto Cycle
   b) Diesel Cycle
2. According to the No. of Stroke
   a) Two stroke engine
   b) Four stroke engine

AM_Unit_04.indd 69 12/20/2019 4:36:43 PM

3. According to the Fuel used
   a) Petrol or Gasoline Engine
   b) Diesel Engine
   c) Gas Engine

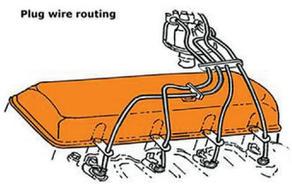



4. According to the Combustion System
   a) Spark ignition system
   b) Compression ignition system

5. According to the No. of cylinder
   a) Single cylinder engine
   b) Multi-cylinder engine

6. According to the arrangement of Cylinder
   a) Inline engine
   b) V – type engine
   c) Opposed cylinder engine
   d) Radial engine

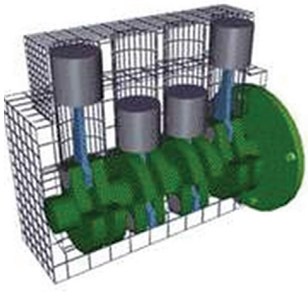

Inline Engine

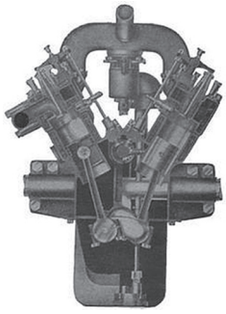

V – Type Engine

7. According to the construction of Valve
   a) L – head engine
   b) T – head engine
   c) I – head engine
   d) F – head engine

8. According to the Cooling System
   a) Air cooled engine
   b) Water cooled engine



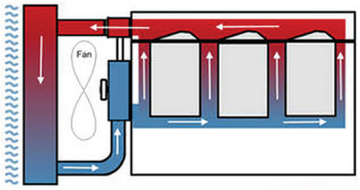

9. According to the Speed
   a) Low-speed engine
   b) Medium speed engine
   c) High-speed engine

10. According to the Usage
    a) Stationary engine
    b) Automotive engine
    c) Locomotive engine
    d) Marine engine
    e) Aircraft engine

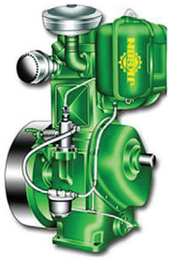

Stationary Engine



Automotive Engine



Marine Engine



Locomotive Engine



Aircraft Engine

AM_Unit_04.indd 70 12/20/2019 4:36:44 PM



Nikolaus Otto

Internal compression engine

Nikolaus August Otto (14 June 1832, Holzhausenan der Haide, Nassau – 26 January 1891, Cologne) was a German engineer who successfully developed the compressed charge internal combustion engine which ran on petroleum gas and led to the modern internal combustion engine.

The VDI (Association of German Engineers) created DIN standard 1940 which says "Otto Engine: internal combustion engine in which the compressed fuel-air mixture is initiated by a timed spark ignition", which has been applied to all engines of this type since.

His main interest in school had been in science and technology but he graduated after three years as a business apprentice in a small merchandise company.

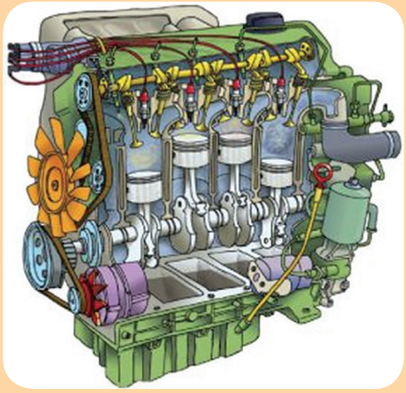

4.3 TECHNICAL SPECIFICATION OF THE ENGINE

1. Top Dead Centre (TDC) is the outermost point of forward travel of the piston in the cylinder.
2. Bottom Dead Centre (BDC) is the innermost point of backward travel of the piston in the cylinder.
3. Stroke Length is the distance between TDC and BDC travelled by the piston in the cylinder. It will be twice the crankshaft throw.
4. Crankshaft throw is the distance between the centre of the crankshaft main bearing to the centre of the crank pin. It will be half of the stroke length.
5. Cylinder bore is the inside diameter of the cylinder.
6. Clearance volume is the volume of the cylinder above the piston when the piston is at TDC.
7. Swept volume / Displaced volume is the volume displaced by the piston when piston moves from TDC to BDC
8. Total volume is the volume of the cylinder above the piston when the piston is at BDC.

AM_Unit_04.indd 71 12/20/2019 4:36:44 PM

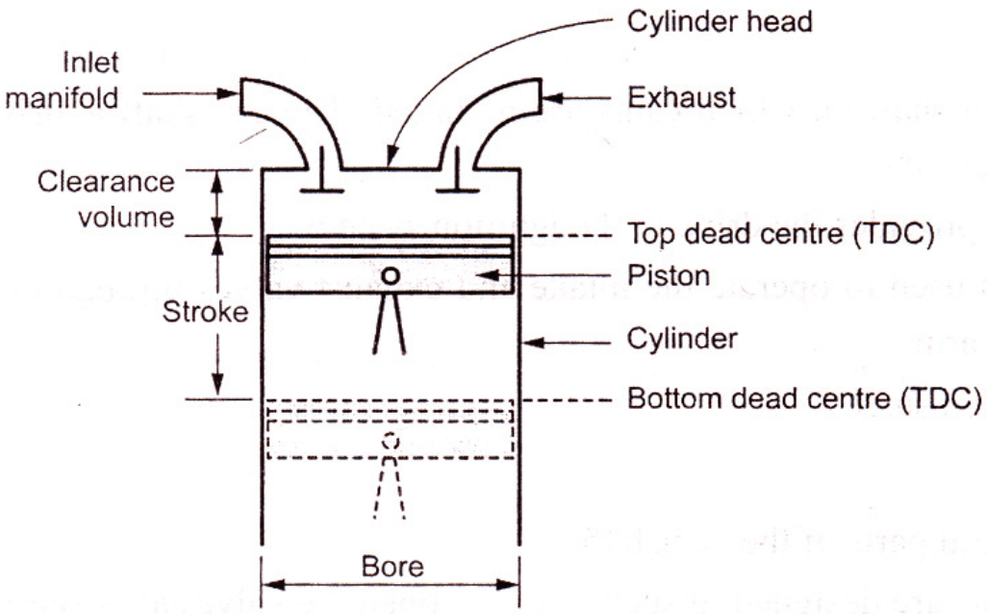

Figure 4.3 Technical Specification of the Engine

9. Compression ratio is the ratio of total volume of the cylinder to clearance volume.
10. Indicated power is defined as the power developed by combustion of fuel inside the engine cylinder.

$$IP = \frac{P_m LAN}{60 \times 1000}$$

I.P. = Indicated Power, kW

P_m = Mean Effective Pressure, N/m^2

L = Stroke Length, m

A = Cross section area of Piston, m^2

N = Crankshaft RPM (for 2 Stroke engine N, for 4 Stroke engine N/2)

11. Brake power is the actual work output of an engine or the actual work available at the crankshaft. It can be measured with the help of brake dynamometer.

$$B.P = \frac{2\pi NT}{60 \times 1000}$$

B.P. = Brake Power, kW

N = Crankshaft RPM

T = Torque or Resisting torque in the dynamometer, Nm and

12. Frictional power: Engine brake power is always less than Indicated power, due to frictional losses at the working surfaces like bearings, piston rings and valves. The power loss due to friction is called as frictional power.
13. Friction power, F.P. = Indicated power, I.P. – Brake power, B.P.

Efficiency: The ratio of power output and power input to the engine is called as Efficiency. It is calculated by Volumetric Efficiency, Thermal Efficiency and Mechanical Efficiency.

Volumetric Efficiency is defined as the ratio of the actual volume of air inducted during the intake stroke to the theoretical volume of a cylinder.

Thermal Efficiency is the ratio of the useful work obtained to the heat supplied to the engine.

Mechanical Efficiency is defined as the ratio of flywheel output to the useful work obtained from the engine.

AM_Unit_04.indd 72 12/20/2019 4:36:45 PM

Who made the first motor cycle?

First motor cycle was designed and built by the German inventors Gottlieb Daimler and Wilhelm Maybach in 1885.

It was designed as a testbed for their new engine, rather than a true prototype vehicle.

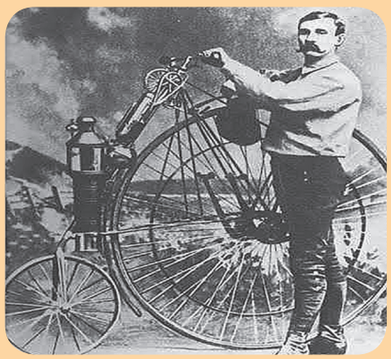

14. Brake Mean Effective Pressure (BMEP) is the mean (average) pressure on the piston uniformly acting during the power stroke, which would produce the same measured (brake) power output.

15. Specific fuel consumption (SFC) is defined as the total fuel consumption per hour per kW power developed. SFC is the rate of fuel consumption per kWh. It allows comparing engines of different sizes to see which is the most fuel efficient. It helps to determine which engine uses the least amount of fuel while producing high power. When Indicated power (IP) is used to calculate SFC, then it is known as Indicated Specific fuel consumption (ISFC) and when Brake power (BP) is used to calculate SFC, then it is known as Brake Specific fuel consumption (BSFC).



4.4 ROYAL AUTOMOTIVE CLUB RATING

RAC Rating was introduced by the Royal Automobile Club in England. The tax horsepower or taxable horsepower was an early system by which taxation rates for automobiles were calculated. Taxable horsepower is a calculated figure based on the engine's bore size, number of cylinders but does not reflect on developed horsepower.

RAC rating = (D x N) / 2.5

D = the diameter of the cylinder in inches [1" = 25.4mm], and

N = the number of cylinders

4.5 SOCIETY OF AUTOMOTIVE ENGINEERS RATING

Society of Automotive Engineers Rating is based on net power developed on the engine. Net power is the power developed by the engine by removing engine belt-driven accessories, air cleaner, emission controls, exhaust system, and other power-consuming accessories.

Student Activity

1. Students should prepare the list of most widely used cars by the public.
2. Students should prepare an album containing the cars used in India and other foreign countries.
3. Students should visit the nearby workshops to learn the functioning of Internal and External combustion engines

AM_Unit_04.indd 73 11/6/2020 3:08:59 PM



Diesel engine

Rudolf Christian Karl Diesel (German: 18 March 1858 – 29 September 1913) was a German inventor and mechanical engineer, famous for the invention of the diesel engine, and for his mysterious death. Diesel was the subject of the 1942 film Diesel

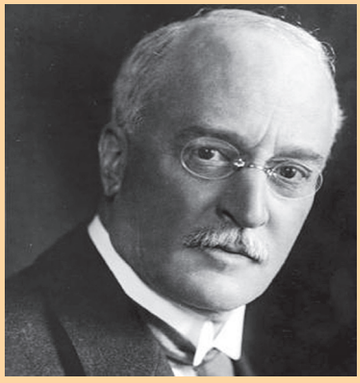

Rudolf Diesel

Diesel was born in Paris, France in 1858 the second of three children of Elise and Theodor Diesel.

His parents were Bavarian immigrants living in Paris. Theodor Diesel, a bookbinder by trade, left his home town of Augsburg, Bavaria, in 1848.

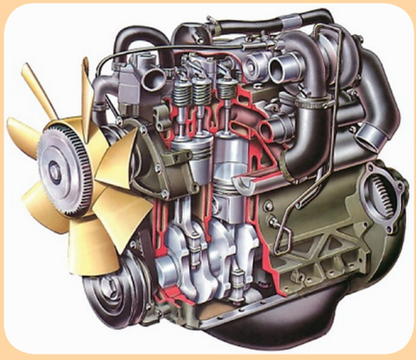

Figure 4.5

He met his wife, a daughter of a Nuremberg merchant, in Paris in 1855 and became a leather goods manufacturer there.



Glossary

Transportation	-	போக்குவரத்து
Dramatic	-	நடைமுறை மாற்றம்
Discovered	-	கண்டுபிடிப்பு
Commercially	-	வணிகரீதியாக
Combustion	-	எரியூட்டுதல்
Efficiently	-	திறமையான
Manufactured	-	தயாரித்தல்
Luxury	-	சொகுசான

AM_Unit_04.indd 74 12/20/2019 4:36:45 PM

References

1. Kirpal Singh, "Automobile Engineering Vol 1 & 2", Standard Publishers, Seventh Edition, 1997, New Delhi.
2. Jain, K.K., and Asthana. R.B, "Automobile Engineering" Tata McGraw Hill Publishers, New Delhi, 2002.
3. Ganesan V. Internal Combustion Engines, Third Edition, Tata McGraw - Hill, 2007.
4. B.P. Pundir, I.C. engine combustion and emissions. Narosa Publishing House, July 2010.
5. Rajput R.K. Internal Combustion Engines, Laxmi Publications (P) Ltd, 2006.
6. Ramalingam, K.K., Internal Combustion Engines, SciTech Publications (India) Pvt. Ltd., 2004.

Webliography

1. https://en.wikipedia.org/wiki/History_of_the_automobile
2. https://www.sae.org/
3. http://saeindia.org/
4. http://dhi.nic.in/UserView/index?mid=1319
5. http://www.siamindia.com/technical-regulation.aspx?mpgid=31&pgidtrail=34
6. http://www.siamindia.com/technical-regulation.aspx?mpgid=31&pgidtrail=32
7. http://www.tn.gov.in/sta/

AM_Unit_04.indd 75 12/20/2019 4:36:46 PM



SAMPLE QUESTIONS

Choose the correct answer:

1. In which year Nikolos otto invented four stroke internal combustion engine?
   a) 1863 b) 1866
   c) 1880
2. In which year Rudalf Diesel invented diesel engine?
   a) 1886 b) 1892
   c) 1894
3. Crank throw is
   a) The distance between TDC & BDC
   b) half of the stroke length
   c) Double time of the stroke length
4. Which type of steam engine is used in locomotive?
   a) Internal combustion engine
   b) External combustion engine
   c) opposite cylinder engine
5. Stroke is
   a) Distance between TDC & BDC
   b) Equal to crank throw
   c) Half of the crank throw

Answer the following questions:

1. What is meant by Automobile?
2. In which year and by whom the Automobile Vehicle is invented?
3. Describe the History of Automobile.
4. Based on the Fuels how the Automobile Vehicle is classified? Mention the Names.
5. State three examples of External Combustion Engine.
6. What is Internal Combustion Engine?
7. How do you classify the Internal Combustion Engine?
8. What is Stroke?
9. Write short notes on TDC & BDC.
10. Define Compression Ratio.

AM_Unit_04.indd 76 12/20/2019 4:36:46 PM

Unit 5 Engine

Contents

5.0 Introduction
5.1 Petrol Engine
5.2 Diesel Engine
5.3 Parts of an IC Engine
- 5.3.1 Cylinder Block
- 5.3.2 Cylinder Liner
- 5.3.3 Cylinder Head
- 5.3.4 Crank Case
- 5.3.5 Oil Sump
- 5.3.6 Gasket
- 5.3.7 Piston
  - 5.3.7.1 Methods to avoid expanding
  - 5.3.7.2 Functions of piston
  - 5.3.7.3 Types of piston
  - 5.3.7.4 Piston arrangement
- 5.3.8 Connecting Rod
- 5.3.9 Crank Shaft
- 5.3.10 Vibration Damper
- 5.3.11 Timing Gear
- 5.3.12 Cam Shaft
- 5.3.13 Valve
- 5.3.14 Manifold
- 5.3.15 Fly Wheel
- 5.3.16 Silencer

5.4 Four Stroke Petrol Engine
5.5 Two Stroke Petrol Engine
5.6 Comparison of Two Stroke and Four Stroke Engine
5.7 Four Stroke Diesel Engine
5.8 Two Stroke Petrol Engine

AM_Unit_05.indd 77 12/20/2019 5:26:29 PM

Learning Objectives

- To learn about Internal and External combustion engines.
- To learn about the engine parts, manufacturing procedure and the material used.
- To learn about the thermal energy produced in two stroke and four stroke engines.

5.0 INTRODUCTION

Thiruvalluar quotes "When water fails, functions of nature cease". In modern world "When automobile fails, functions of world cease". The mobility of the people and world will ceases when there is no automobile. Thus Automobile plays a vital role in transportation of people and goods from one place to another, even in between the continents.

The driving force required to drive the vehicle is provided by the Engine. Engine is considered to be the heart of an automobile. Based on Law of conservation of Energy, i.e., Energy can be transformed from one form to another form, engine is used to convert heat energy obtained by burning of fuel into mechanical energy and therefore they are called as Heat Engines.

5.1 PETROL ENGINE

In petrol engines, the heat energy is obtained by burning the petrol with air and this heat energy is converted into mechanical energy. Since petrol is also called as gasoline, this engine is also called as Gasoline engines.

The liquid state of petrol fuel is converted into vapour and it is mixed with atmospheric air. This air-fuel mixture is inducted into the engine, and it is burnt with the spark introduced by the spart plug. Hence, this engine is also called as spark ignition engine. This engine was invented by Nichloas Otto, German scientist in 1876. The engine is working based on otto cycle which is constant volume cycle. To burn a fuel, four operations is required namely, intake of fuel air mixture, compression of fuel air mixture, burning of furl air mixture and sent out the burnt air fuel mixture from the engine. Each operation is completed in each stroke of the piston and four stroke is required to complete a cycle. Hence it is called as four stroke engine.

5.2 DIESEL ENGINE

In diesel engines, the heat energy is obtained by burning the diesel with air and this heat energy is converted into mechanical energy. In 1897, Rudolph diesel invented the Diesel engine and hence the engine was called by his name "Diesel engine". This engine is working based on constant pressure cycle. In diesel engine, the air alone is intaken during suction stroke and it is compressed during the compression stroke. At the end of the compression stroke, diesel fuel is injected at high pressure which automoise the diesel fuel. The temperature of the compressed air is sufficient enough to start the combustion. Since air alone is compressed at high pressure, it will liberate more energy than petrol engine. Hence this engine is used on trucks, buses and heavy vehicles.

AM_Unit_05.indd 78 12/20/2019 5:26:29 PM

Since the cost of the diesel fuel is less and high energy is available, this engine is widely used for transportation, though the maintenance cost is more.

5.3 PARTS OF AN IC ENGINE

1. Cylinder Block
2. Cylinder Liner
3. Cylinder Head
4. Crank Case
5. Oil Sump
6. Gasket
7. Piston
8. Connecting rod
9. Crank Shaft
10. Timing Gear, Timing Chain
11. Vibration damper
12. Cam shaft
13. Valve and Valve mechanism
14. Inlet Manifold and Outlet Manifold
15. Flywheel
16. Silencer

Other components like oil pump, fuel pump, carburetor, distributor, water pump, air filter, oil filter etc are also attached to the engine. The major components of IC Engine is shown in Fig 5.3.

The Material of the major components are shown in Table 5.1.



Cylinder Block



Cylinder Head



Crank Case



Silencer

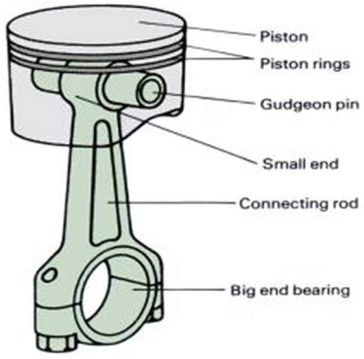

Piston Assembly



Cam Shaft



All Types of Valves

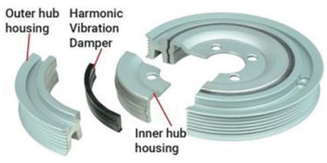

Vibration Damper



Manifold



Flywheel

Figure 5.3 Major Components of IC Engine

AM_Unit_05.indd 79 12/20/2019 5:26:30 PM

Table 5.1 Major Parts of an IC Engine and Its Material

Part	Material
Cylinder Block	Grey cast iron or Aluminum alloy
Cylinder Liner	Steel alloy containing Nickel, Manganese, Chromium, Silicon
Cylinder Head	Grey cast iron or Aluminum alloy
Crank Case	Grey cast iron or Aluminum alloy
Oil Sump	Pressed steel
Gasket	Alloy Steel containing copper, asbestos
Piston	Aluminum alloy
Piston Pin	Special steel
Piston Ring	Cast iron
Connecting Rod	Forged Alloy steel
Crank Shaft	Heat treated alloy steel
Vibration Damper	Aluminum alloy or wrought iron
Timing Gear, Timing Chain	Special alloy steel
Cam Shaft	Heat treated alloy steel
Main Bearing	Steel containing phosphor cronze, lead, bronze, tin, antimony and aluminum
Valve	Alloy steel containing silicon, chromium, nickel
Manifold	Cast iron or Aluminum
Flywheel	Pressed steel / cast iron
Silencer	Cast iron or hardened steel

5.3.1 Cylinder Block

The cylinder block is the main supporting structure for the various components. Cylinder block will have one or more cylinders. For multicylinder engine, the cylinders are cast as a single unit, called cylinder block. The cylinder block inner surface is machined and finished accurately for the piston to reciprocate up and down. The cylinder head is mounted on the top of the cylinder block. Cylinder head gasket is placed between the cylinder block and cylinder head. The cylinder head and cylinder block are provided with water jackets or with cooling fins. The crankshaft is mounted on bottom of the cylinder block with the help of bearings. The bottom portion of the cylinder block is called crankcase. A sump for lubricating oil is fastened to the bottom of the crankcase.

Cylinder blocks are two types

1. **Split block:** Crank case and cylinder block are manufactured as a separate unit and
2. **Mono block:** Crank case and cylinder block are manufactured as a single unit

The mono block and split block are shown in Fig 5.3.1.

5.3.2 Cylinder Liner

The cylinder will wear with use, and therefore there may be reduction in

AM_Unit_05.indd 80 12/20/2019 5:26:30 PM

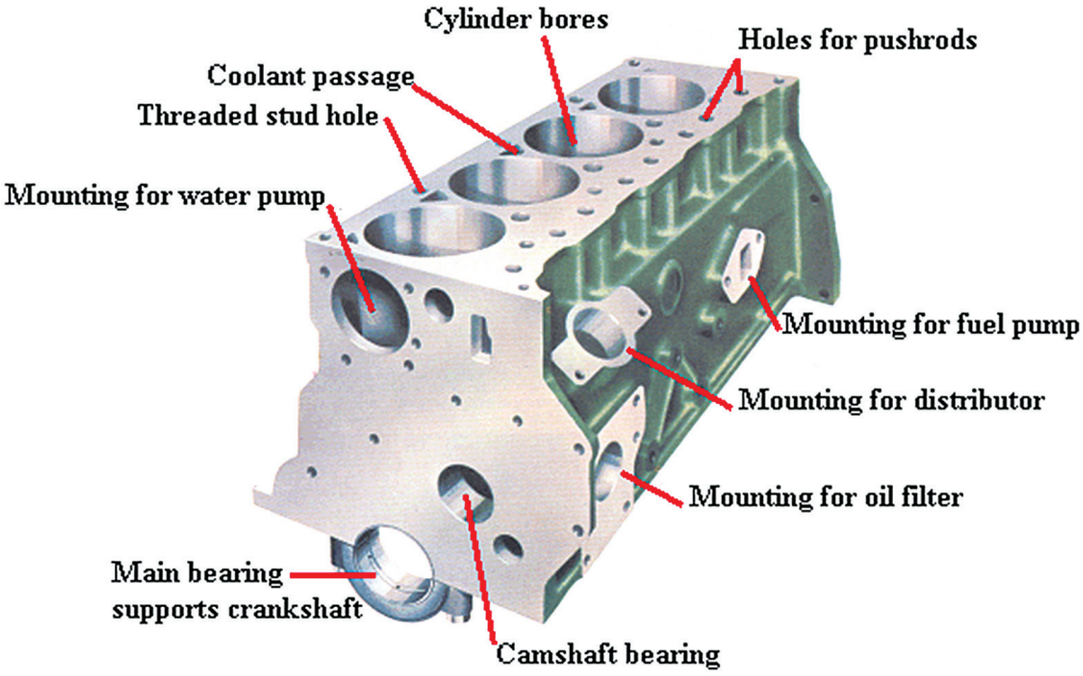

Mono Block

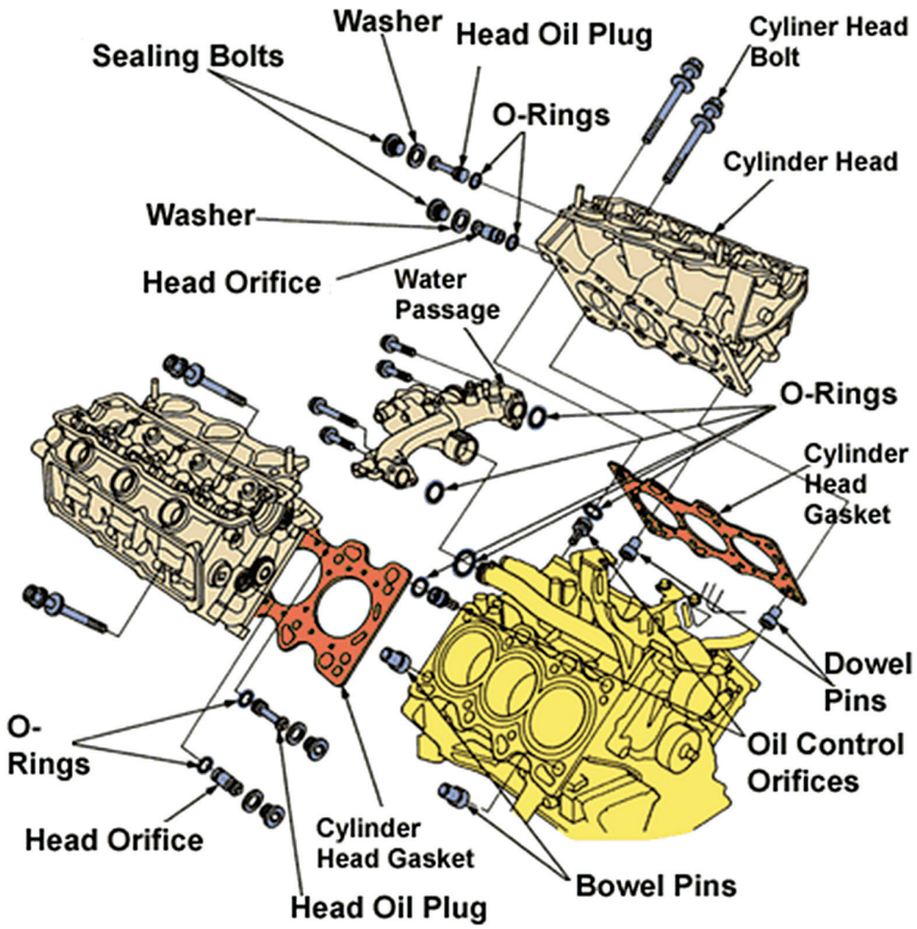

Split Block

Figure 5.3.1 Mono Block and Split Block

AM_Unit_05.indd 81 12/20/2019 5:26:30 PM

performance as well as maintenance cost is increased. In such cases, the use of a sleeve or liner can restore proper clearances to an engine. Due to prolonged use, the liner will wear and it can be replaced at lower cost. Cylinder liners are of two types namely dry liner and wet liner.

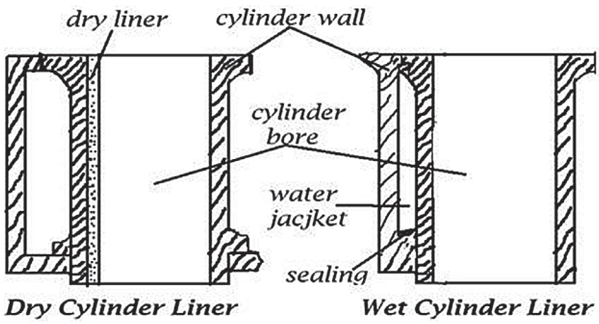

Figure 5.3.2 Dry and Wet Liner

(a) Dry liner

The outer diameter of liner and inner diameter of the cylinder wall are manufactured to fit perfectly. Liners are assembled with the help of hydraulic press or by cooling the liner. The dry type liner is not in direct contact with the coolant hence the name "Dry". The cylinder liner is surrounded by the cylinder body. The cylinder body is contacted by the cooling water so as to achieve heat dissipation. Liner thickness would be 1.5 mm to 3.0 mm. Flanges and seals are at top surface of cylinder.



Figure 5.3.2(a) Dry Liner

Wet liners may have a cooling water space between the engine block and liner, or they may have integral cooling passages. Liners with integral cooling passages are sometimes referred to as water-jacket liners.

(b) Wet liner

The inner surface of wet liner are perfectly machined and honed. The outer surface is not machined. They are referred to as "wet liners" because their outer sides come in direct contact with the engine's coolant. The thickness of the liner will be 3.0mm to 6.0 mm. It is sealed by a metallic sealing ring from top and a rubber sealing ring at the bottom. A wet liner cylinder block features cylinder walls that are entirely removable, which fit into the block by means of special gaskets.



Figure 5.3.2(b) Wet Liner

5.3.3 *Cylinder head*

In an engine, the cylinder head assembled above the cylinders on top of the cylinder block with the help of studs. It closes in the top of the cylinder, forming the combustion chamber. This joint is sealed by a head gasket. The head also provides passage for intake of air and fuel and exhaust of burnt gases, water cooling passage. The head can also be a place to mount the valves, spark

AM_Unit_05.indd 82 12/20/2019 5:26:30 PM

plugs, and fuel injectors. In case of overhead valve engine, then oil passage for pushrod and rocker arm are also available. Cylinder heads are classified as

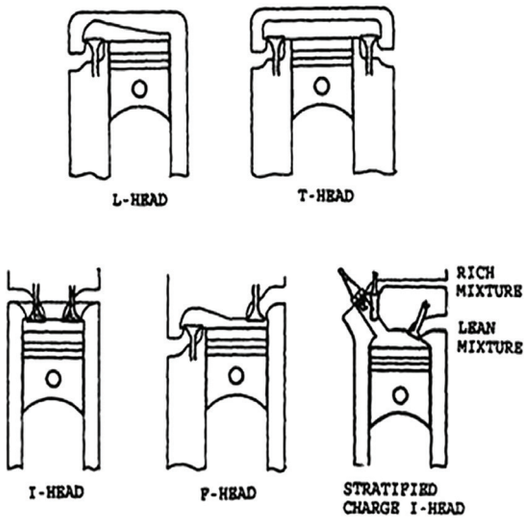

Figure 5.3.3 Types of Cylinder Head

L – Head Engine

I – Head engine

F – Head engine

T – Head engine and are shown in Fig 5.3.3.

5.3.4 Crank case

The crank shaft and cam shaft are placed on the crank case. It is formed as the portion of the cylinder block below the cylinder bore and the oil sump at the bottom. Crank case and the cylinder block are made as a single unit. The oil sump is connected with the crank case by the studs. The Crank case with Crank shaft is shown in Fig 5.3.4

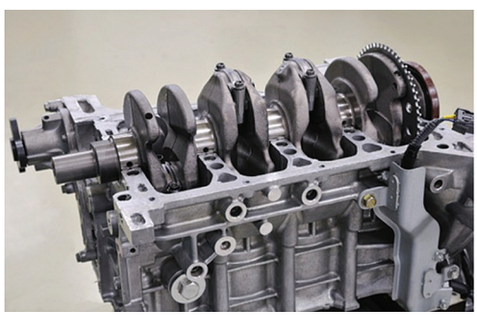

Figure 5.3.4 Crank Case with Crank Shaft

5.3.5 Oil sump

The oil sump is attached below the crank case. It is used to store the lubricating oil which is used for lubricating purpose. To drain or replace the used lubricating oil a drain arrangement is fitted.



Figure 5.3.5 Oil Sump

5.3.6 Gasket

When connecting two metal parts directly, there musty be air tight connection between the parts or otherwise if there is a gap, it allows the gas or the liquid to leak. To arrest the leakage of gas or oil, the gasket is being used. It makes the two metal components air tight and close. Gaskets are placed in the cylinder block, cylinder head crankcase and oil pump and in oil sump. For placing the inlet and outlet manifolds on the cylinder head gaskets are being used.



Figure 5.3.6 Gasket

5.3.7 Piston

The piston is the most important component of the engine. It is kept inside the

AM_Unit_05.indd 83 12/20/2019 5:26:31 PM

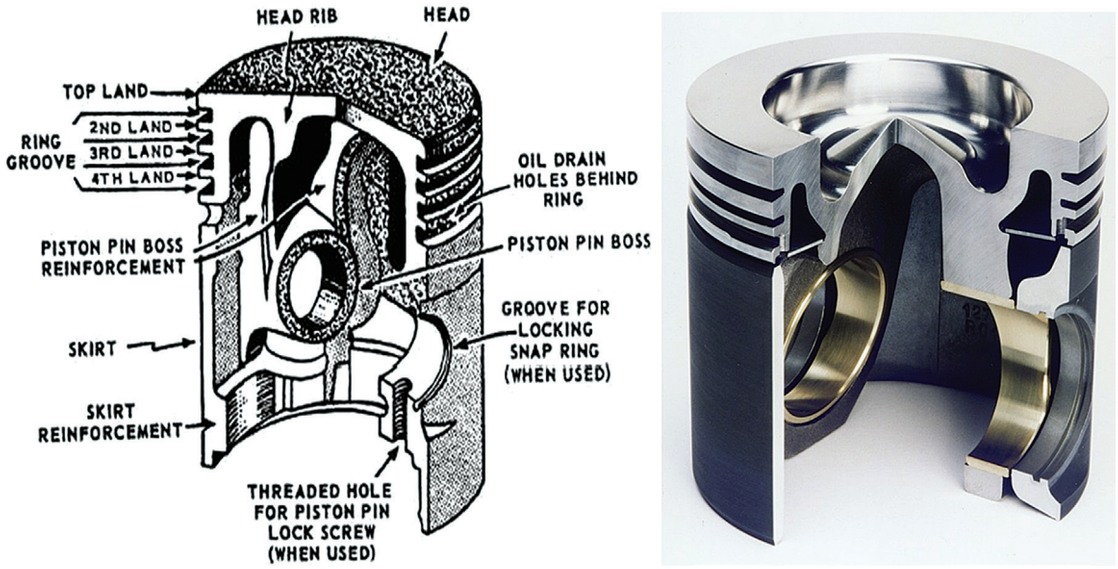

Fig 5.3.7 Parts of Piston

cylinder liner and allowed to move up and down. It is used to suck the air fuel mixture inside the cylinder and transmits the engine power to the connecting rod which is obtained during the power stroke. It is used to convert the heat energy into mechanical energy. The first piston was made of iron. As the usage of iron was heavy, it observed more energy that was produced by the engine. To avoid this power loss the less weight, easily machinable and less price metal alloys such as aluminium alloy are being used nowadays. The piston is shown in Fig 5.3.7.

To make a good piston the following qualities should be maintained while manufacturing.

1. The weight should be less
2. Cost should be low
3. The piston should be easily machinable
4. It should with stand very high temperatures
5. It should have the capacity to transfer more heat quickly.
6. It should not expand easily due to high temperature.

5.3.7.1 Methods to avoid expanding

As the engine is being operated continuously at very high temperatures the piston gets over heated than the engine cylinder. Because the engine cylinder block is continuously cooled by using the cooling water. As the Piston gets more heat than the engine cylinder the piston gets expanded. If the piston expands, the movement of the piston become difficult for it and will stop which affects the engine in producing the power. To avoid this piston expansion the following provisions are adopted on the piston

a. Horizontal slot
b. Heat Dam
c. Vertical slot
d. T slot
e. Oblique slot
f. Solid slot

a) Horizontal slot

The horizontal Slot is being made on the top of the piston, Just below the oil ring at the skirt portion of the piston so that the heat

AM_Unit_05.indd 84 12/20/2019 5:26:32 PM

coming from the piston head during power stroke is observed by the slot. By this way the piston is protected from expansion and allowed to operate the engine safely.



Figure 5.3.7.1(a) Horizontal Slot

b) Heat Dam:

It is like how we store water in ponds and use it when needed. Similar to that to save the heat generated inside the engine combustion chamber and use it effectively small pits in concave shape are made on the piston head which are used to save heat. Hence the heat transfered from the crown to the skirt is being reduced and the expansion of piston is being avoided

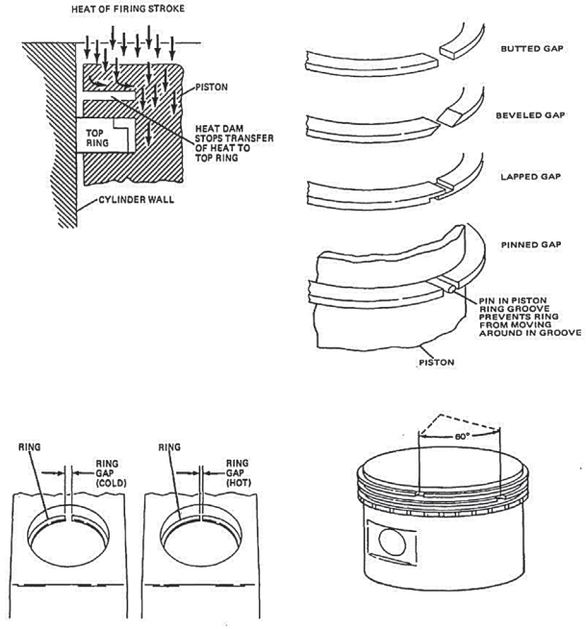

Figure 5.3.7.1(b) Heat Dam

c) Vertical Slot:

This type of slots is used in preventing the piston's expansion due to heat particularly at the outer periphery. The slots are made in selected places where the expansion is predicted to be more in such a way that it should tolerate the expansion of the piston.



Figure 5.3.7.1(c) Vertical Slot

d) T slot:

Similar to the vertical slot piston the T-slot helps the Piston to avoid expansion in the diameter wise as well as in the lengthwise and helps engine to function properly.



Figure 5.3.7.1(d) T-Slot

e) Oblique Slot:

In this type the slots are made on the piston's oil ring slots to control the temperature of the piston. The slots are made slightly in slanting manner such that it reaches the skirt. In this type the heat produced in the engine is blocked in such a way that it should not reach the skirt. The heat is transferred in sideways and also in the lengthwise so that the piston is saved from the high temperature produced inside the engine combustion chamber.

AM_Unit_05.indd 85 12/20/2019 5:26:32 PM



Figure 5.3.7.1(e) Oblique Slot

f) Solid Slot:

Similar to oblique slots, in solid type, small holes are made on the slots of the oil ring. These holes restrict the heat from the head to enter into the skirt. Hence the piston works safely.



Figure 5.3.7.1(f) Solid Slot

5.3.7.2 Functions of piston

In the engine at the combustion chamber the power obtained during power stroke cannot be sent directly to the crankshaft. The component used to transfer the power (gas pressure) from the combustion chamber to the crankshaft through the connecting rod is the piston.

The functions of the piston are listed below.

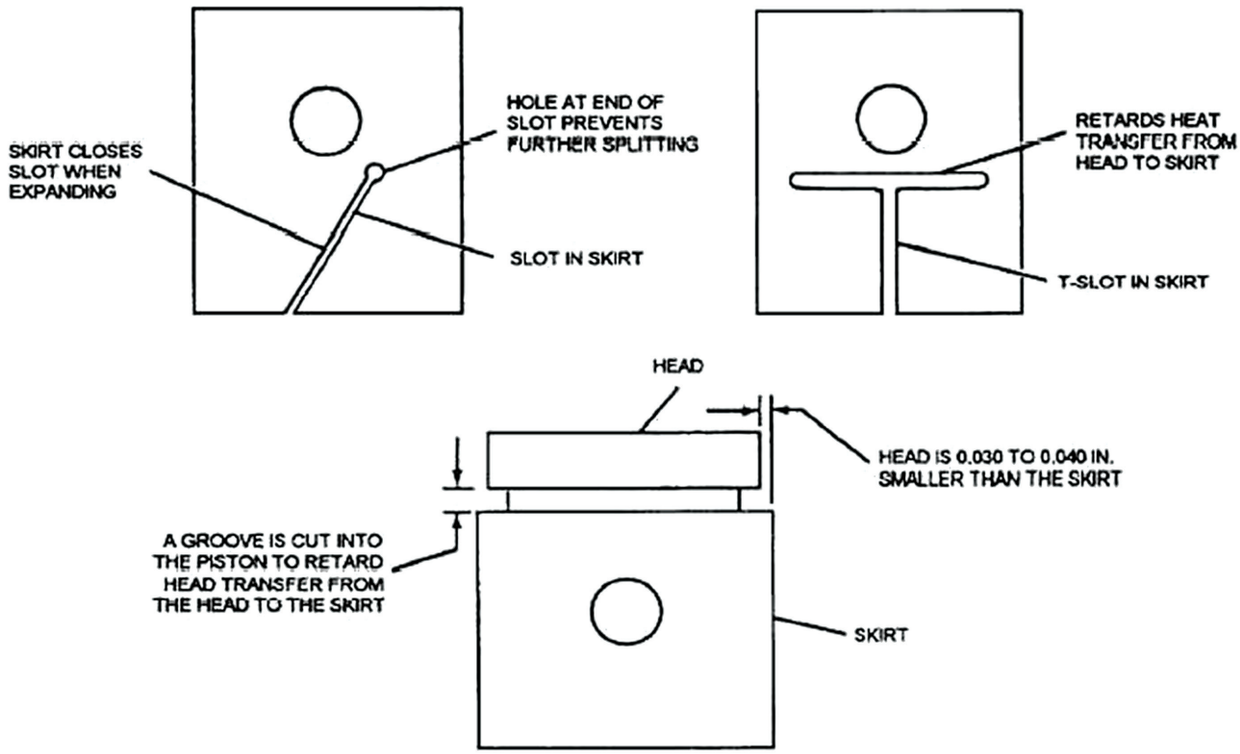

Figure 5.3.7.1 Schematic Diagrams of Various Slot

AM_Unit_05.indd 86 12/20/2019 5:26:33 PM

1. To transfer the power from the combustion chamber to the crank shaft through the connecting rod.
2. To transmit the heat produced from the power to the combustion chamber walls
3. To acts as seal inside the cylinder to withstand high pressure and protects the crankcase in avoiding high pressure to pass to the crank case
4. It acts as a guide to connecting rod
5. It acts as a component for supporting the piston ring
6. It is used to suck the air or air fuel mixture and also used to compress them
7. It is used to expel the hot gases to the atmosphere during the exhaust stroke.

5.3.7.3 Types of piston

Piston is used to transmit power from engine combustion chamber to the crankshaft. Pistons are classified according to their heads hased on the type of engine and its performance. They are classified as follows,

a. Flat head piston
b. Domed head piston
c. Concave (bowl) head piston

a) Flat head piston

In this type, the piston head is in flat shape. This shape helps in removing combusted products after the power stroke. The design of these pistons is very easy. However, the efficiency of the engines using this type of pistons is less.



Figure 5.3.7.3(a) Flat Piston

b) Domed head piston

In this type, the piston head is of cap like structure. ie., more volume is added to the piston head. This structure helps in smooth compression stroke and also results in proper mixing. Compression ratio is higher for using these types of piston. However the manufacturing process is difficult.

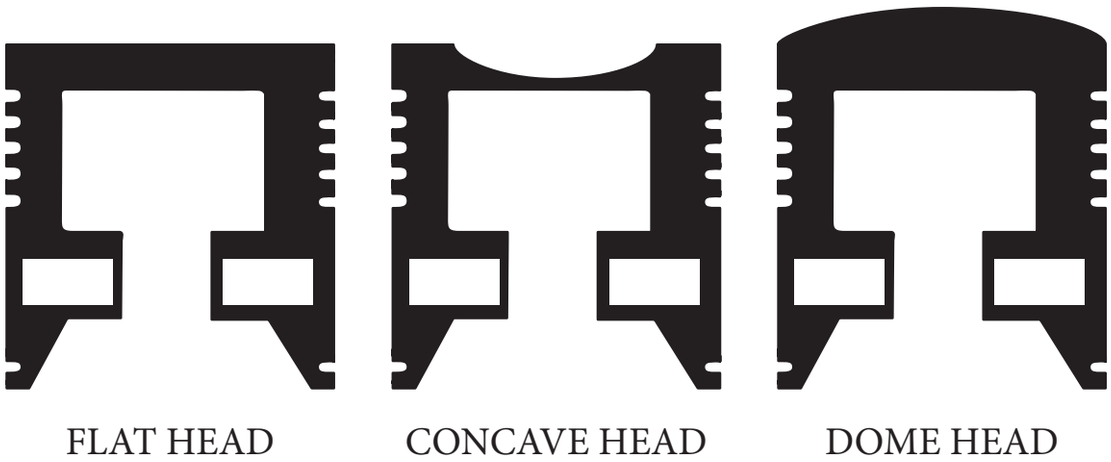

Figure 5.3.7.3 Types of Piston Head

AM_Unit_05.indd 87 12/20/2019 5:26:33 PM



Figure 5.3.7.3(b) Dome Piston

c) Concave head piston

In this type, the piston head is of concave in structure. Due to this, high pressure is produced inside the combustion chamber. These types of piston are used in high compression diesel engines. Concave like structure helps in increasing air turbulence which leads to proper mixing and results in good combustion.



Figure 5.3.7.3(c) Concave head Piston

5.3.7.4 Piston arrangement

The upward and downward motion of cylindrical object inside the cylinder is called piston. Piston consists of heat dam, land, skirt, piston pin boss, rings, grooves. Heat dam is a thin groove cut on the piston head between the top ring groove and the top of the piston. There are slots for compression and oil rings. Below these slots, holes are made for piston pin or piston boss. Slots are present on the

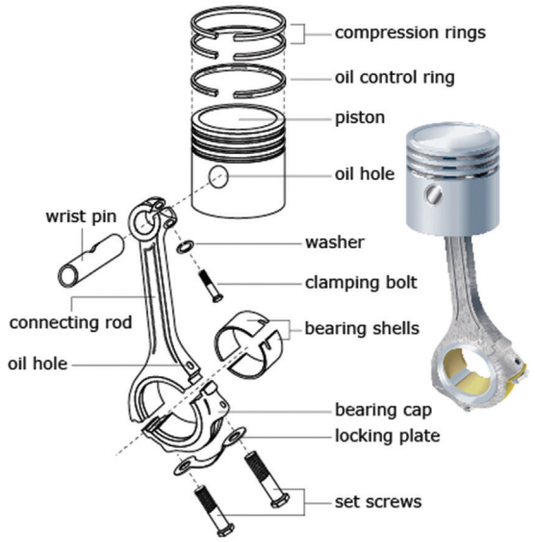

Figure 5.3.7.4 Piston Arrangement

piston skirt. Cylinder liner present inside the cylinder acts as sliding surface for piston.

a) Piston Pin

A piston pin is a hollow shaft that connects the small end of the connecting rod to the piston. It is made up of special alloy steel to prevent wear and tear.

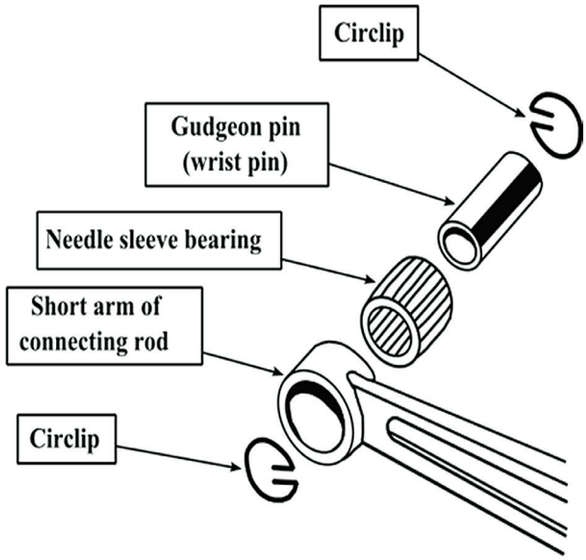

AM_Unit_05.indd 88 12/20/2019 5:26:33 PM



Figure 5.3.7.4(a) Piston Pin

b) Piston Rings

Depending upon the horse power of the engine, one or more piston rings is used. It provides a tight seal between the piston and the cylinder wall thus preventing leakage of combustion gases. The performance of the engine is reduced, if the piston rings are worn out and it can be replaced. Piston rings are classified as

i) Compression ring

ii) Oil scrapper ring

Compression ring

The compression ring seals the combustion chamber from any leakage during the combustion process. When the air-fuel mixture is ignited, pressure from combustion gases is applied to the piston head, forcing the piston toward the crankshaft. The pressurized gases travel through the gap between the cylinder wall and the piston and into the piston ring groove. Combustion gas pressure forces the piston ring against the cylinder wall to form a seal. It also transfers heat from the piston to the cylinder wall. No. of compression ring is depending upon the compression ratio of the engine. Higher the compression ratio more the number of piston rings. Compression rings are made up of Cast Iron.

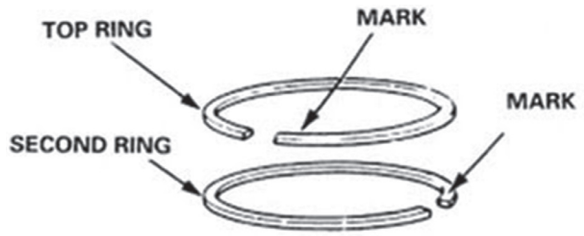

Figure 5.3.7.4(b)(i) Compression Rings

Oil scrapper ring

The bottom most ring is called as oil scrapper ring. The lubricating oils are sprinkled on the cylinder wall and inner side of the piston through the connecting rod oil passage. This ring is used to scrape excess lubricating oil from the cylinder walls, thus prevents the lubricating oil from getting into the combustion chamber of the cylinder Oil scrapper rings are made up of cast iron.

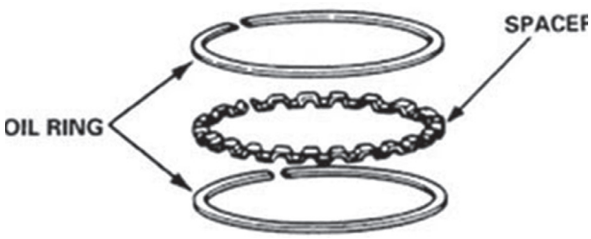

Figure 5.3.7.4(b)(ii) Oil Scrapper Ring

5.3.8 Connecting Rod

It interconnects the piston and the crankshaft and transmits the gas forces from the piston to the crankshaft. The two ends of the connecting rod are called as small end and the big end. Small end is connected to the piston by gudgeon pin and the big end is connected to the crankshaft by crank pin. Connecting rod is made up of Forged steel.

AM_Unit_05.indd 89 12/20/2019 5:26:34 PM

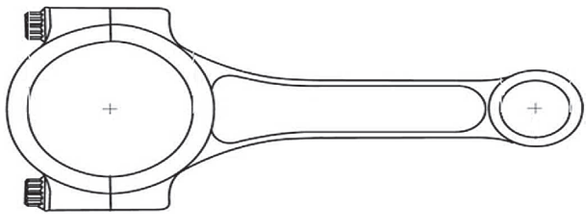

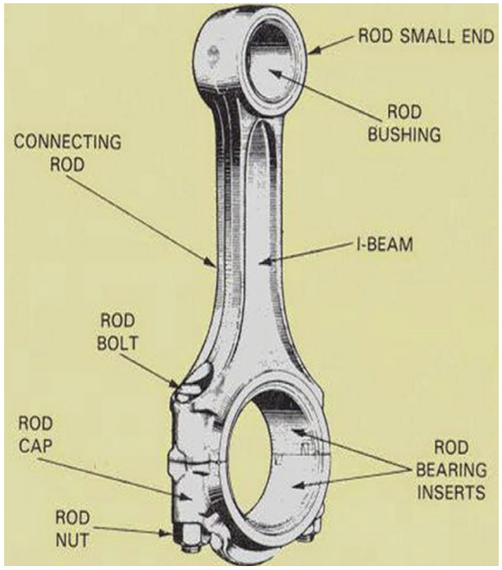

Figure 5.3.8 Connecting Rod

5.3.8.1 Piston, connecting rod and their connection procedures

The engine piston and connecting rod assembly is the most essential arrangement for operating any engine. For connecting the piston and connecting rod piston pin is used. Piston pin is connected with piston and connecting rod based on the three types as indicated below.

a. Fixed Type

B. Semi Floating Type

C. Full Floating Type

The above connecting procedures vary depends upon the torque and power produced from the engine. Piston pin connecting procedures shown in Figure 5.3.8.1.

5.3.8.1(a) *Fixed type:*

In this type the piston and connecting rod are connected with the piston pin by the fixed set of screw inside the piston pin boss for avoiding release of piston pin from its connection. For this purpose, the small end of connecting rod is positioned on centre of the piston pin for attaining the reciprocating motion.

5.3.8.1(b) Semi floating type:

In semi floating type of connection there is a split shaped arrangement in the small end of the connecting rod and it looks like a clamp. This clamp shaped portion is kept with the help of a bolt and nut to avoid removal of piston pin from it. There is a groove at the centre of the piston pin which prevents the pin to not to come out from the clamp. The two ends of the pin are connected

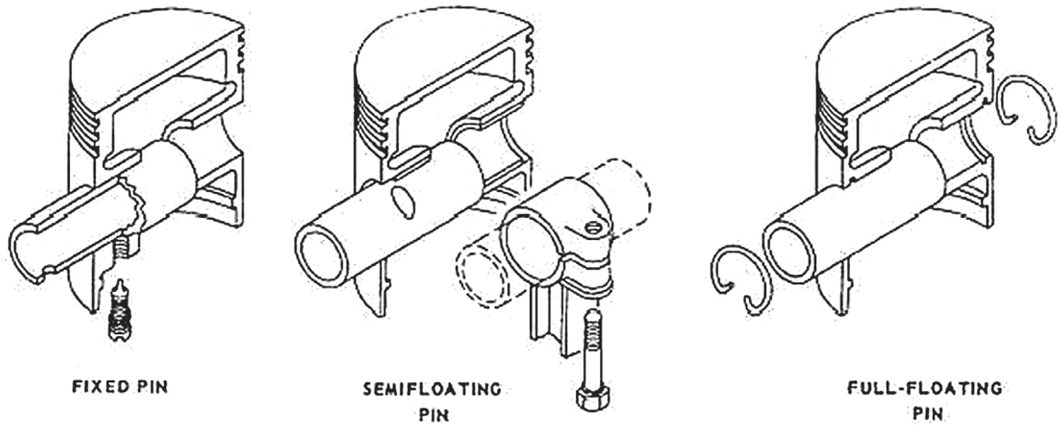

Fig 5.3.8.1 Piston Pin Fixing Method

AM_Unit_05.indd 90 12/20/2019 5:26:34 PM

with the help of the piston pin boss bearing and arrange to be movable within the pin.

5.3.8.1(c) Full floating type:

In this type the connection method of piston pin is designed in a simple way with no much difficulty. During the engine operation for avoiding damage on cylinder wall by the rubbing of piston pin, two circlips were attached with the piston pin boss. In this type, the piston pin is connected at the small end of the connecting rod and piston pin boss and allowed to float (move) easily with in the boss. Hence it is called as full floating type.

5.3.9 Crank Shaft

It converts the reciprocating motion of the piston into useful rotary motion of the output shaft. The crankshaft is enclosed in a crankcase and it is made up of Cast steel.

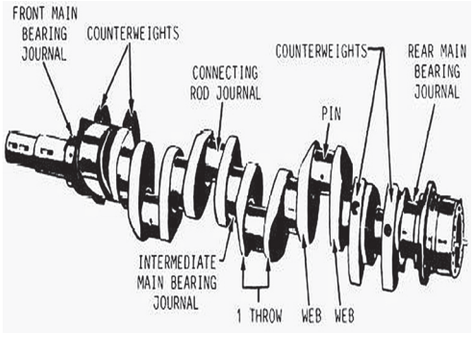

Figure 5.3.9(a) Crank Shaft

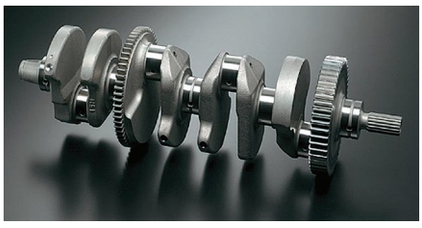

Figure 5.3.9(b) Crank Shaft

5.3.10 Vibration Damper

The power impulses of an engine result in torsional vibration in the crankshaft. If this torsional vibration were not reduced, the crankshaft might break. To avoid this, a vibration damper is mounted on the front of the crankshaft and it controls this vibration. Also a pulley is attached to the vibration damper to drive the fan.



Figure 5.3.10(a) Vibration Damper

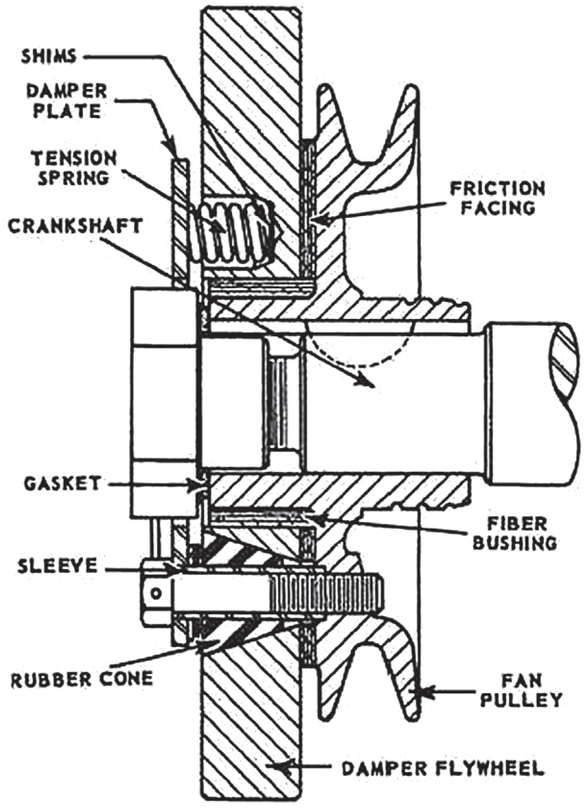

Figure 5.3.10(b) Schematic of Vibration Damper

5.3.11 Timing Gear

Timing gear is used to synchroinse the crankshaft and camshaft. The number of

AM_Unit_05.indd 91 12/20/2019 5:26:34 PM

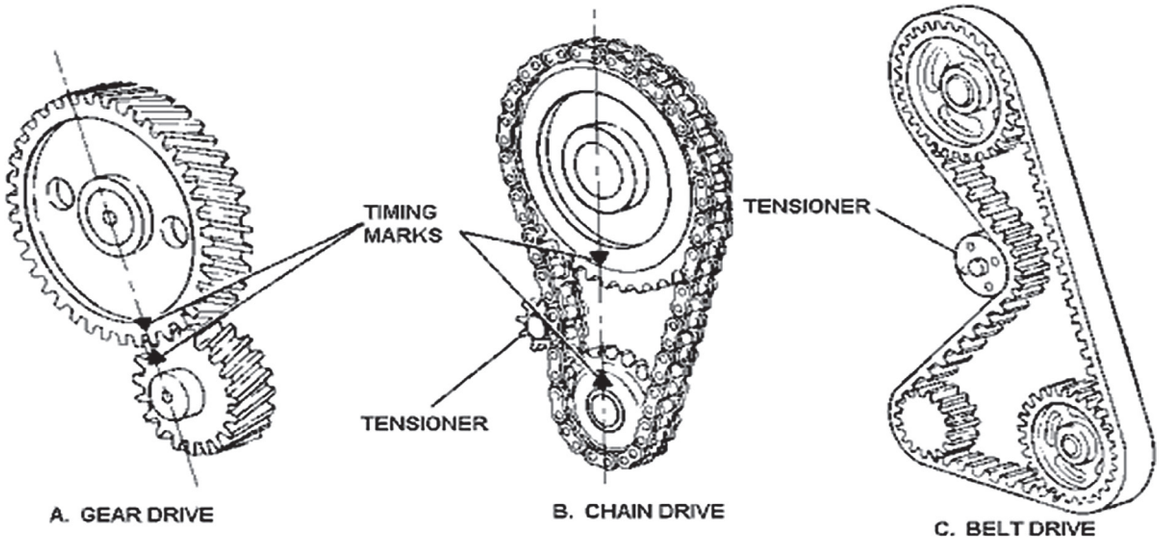



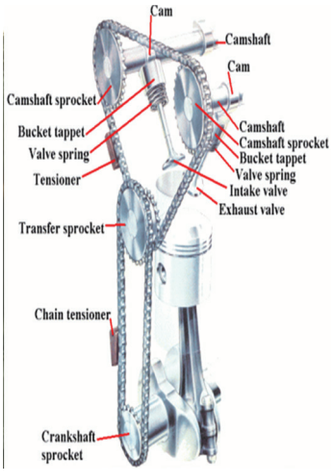

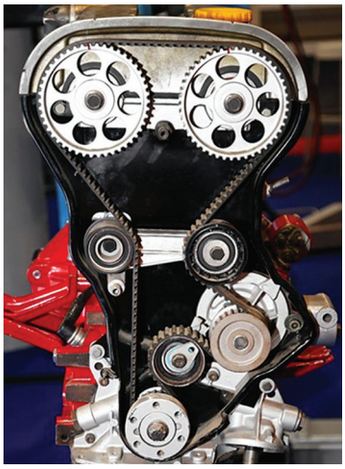

A. Gear Drive **B. Chain Drive** **C. Belt Drive**

Fig 5.3.11(a, b, c) Timing Gear with Various Drive

teeth in camshaft is always twice the number of teeth in crankshaft. Hence, camshaft will always rotate at half the speed of the crankshaft. Timing mark will be marked in the timing gear. This corresponds to first cylinder TDC position. The marks are properly aligned at the time of engine assembly during manufacturing. This will operate the valve at proper time. If the distance between the crankshaft and camshaft is more, then they are connected by timing chain or by timing belt. Timing Gear with Various Drive shown in Figure 5.3.11(a, b, c)

5.3.12 Cam shaft

For obtaining power from the engine, the processes such as valve opening and closing, supplying the air fuel mixture at the appropriate timings and producing spark in the spark plug in order to ignite the air fuel mixture should be done correctly. For performing this type of operation a component called as cam shaft is used., The cams in the cam shaft are designed in such a way to rotate for opening and closing the valves by the cam shaft according to the valve timing and firing order of the engine. In addition to this, eccentric arrangement in the

AM_Unit_05.indd 92 12/20/2019 5:26:35 PM

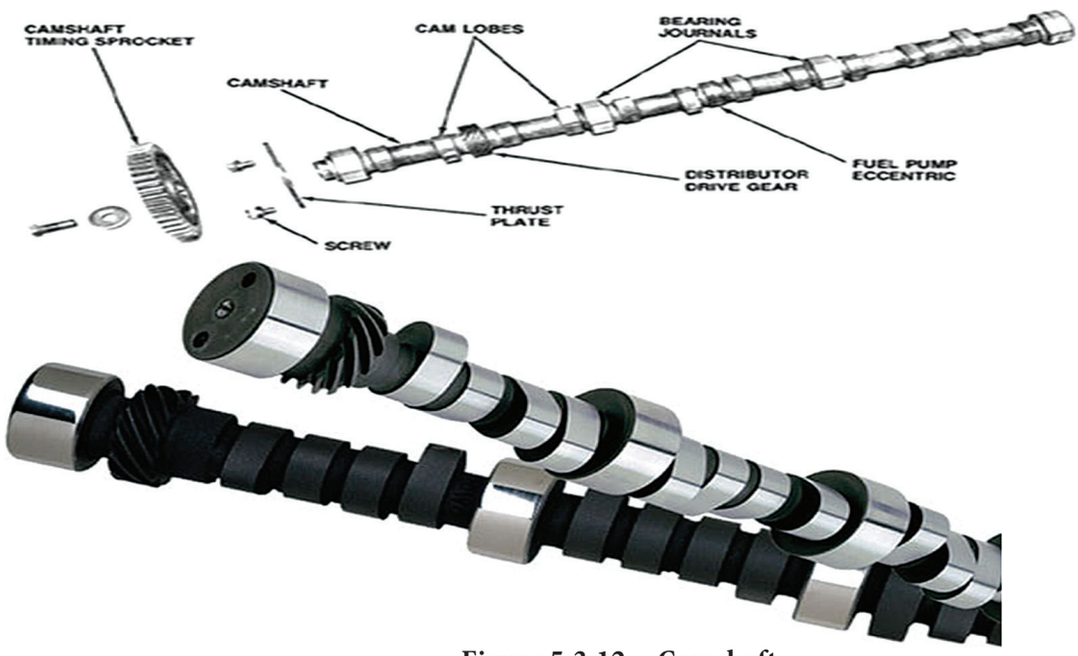

Figure 5.3.12 Camshaft

cam shaft performs the function of actuating the petrol pump and also the skew gear arrangement which is required for operating the oil pump. The timing gear is fitted at the edge of the cam shaft. This gear arrangement is placed in the cylinder block. This gear is made up of special steel for avoiding wear and tear. Cam shaft is actuated by this timing gear with the help of crank shaft. Cam shaft rotates always at half the speed of crank shaft rotation.

5.3.13 Valve

In the engines (generally in four stroke engines) valves are used for supplying enough air fuel mixture into the combustion chamber for combustion and for expelling the burned gases to the exhaust by opening and closing of ports in the engine. There are two valves namely intake and exhaust valves present in the engines. These valves are made up of nickel, chromium alloy steel or silicon chromium alloy steel. The head of the intake valve is generally larger in size than the exhaust valve. These valves are made up of the process called drop forging. In the present days, exhaust valves are produced by austenitic steel. Generally poppet valves are used in present engines.

5.3.13.1 Methods of operating the valves:

In the engine, operating mechanism of the valve varies with the position of the valve arrangements. Valves are placed on the cylinder head in such a way that the valve is moved downwards to open the ports. In another system, valve is placed at the cylinder head in such a way to move upwards to open the ports. Valve mechanisms are generally classified into,

a. Over head poppet valve mechanism
b. Straight poppet valve mechanism

a) Over head poppet valve mechanism:

Construction

This consists of two moving parts, namely push rod and rocker arm. Cam in the can shaft is always in touch with the tappet. One end of the push rod is in contact with tappet and other end with the rocker arm. The other end of

AM_Unit_05.indd 93 12/20/2019 5:26:35 PM

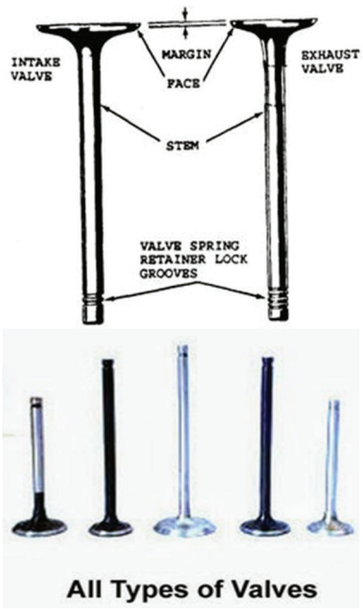

Figure 5.3.13(a) Valves

the rocker arm is made in contact with the valve stem. Rocker arm on the rocker shaft is placed in such a way that it could easily moved up and down. Valves are placed in the valve guides on the cylinder head. Valves are seated properly with the help of valve spring and spring lock.

Operation

When the engine runs, the crank shaft rotates. As the crank shaft is connected with the cam shaft with the help of the timing gear and chain arrangement the cam shaft rotates now. As the cam shaft rotates, the cam present on the cam shaft also rotates. Once the cam rotates, the tappet (placed on the cam) starts to move up and down depends on the rotation of the cam. Due to this action, the push rod which is in contact with the tappet starts to move up and down. This movement of the push rod lifts one end of the rocker arm upwards. As the rocker arm is fitted with rocker shaft, the other end of the rocker arm moves down towards valve stem due to the lift of the arm end at the push rod side. Due to this valve moves downwards and opens the port. By repeating the cam shaft rotation, tappet, push rod and rocker arm, both inlet and exhaust valves open and close for inducting the charge and expelling the hot gases.



TWO STROKE ENGINE

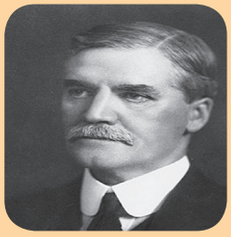

Sir Dugald Clerk:

Sir Dugald C lerk (1854, Glasgow – 1932, Ewhurst, S urrey) was a Scottish engineer who designed the world' s first successful two-stroke engine in 1878 and patented it in England in 1881.

He was a graduate of Anderson's University in Glasgow (now the University of S trathclyde), and Yorkshire College, Leeds (now the University of Leeds). He formed the intellectual property firm with George Croydon Marks, called Marks & C lerk. He was knighted on 24 August 1917.

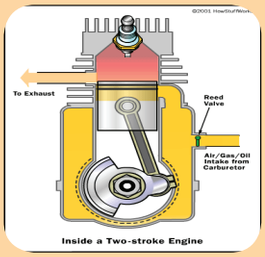

Inside a Two-stroke Engine

Dugald C lerk was born in Glasgow on 31 March 1854, the son of Donald Clerk a machinist and his wife, Martha Symington. He was privately tutored thenapprenticed to the firm of Messrs H O Robinson & Co in Glasgow.

From 1871 to 1876 he went to Anderson College in Glasgow studying engineering then to the Yorkshire College of Science in Leeds. In the First World War he was Director of Engineering Research for the Admiralty.

AM_Unit_05.indd 94 12/20/2019 5:26:36 PM

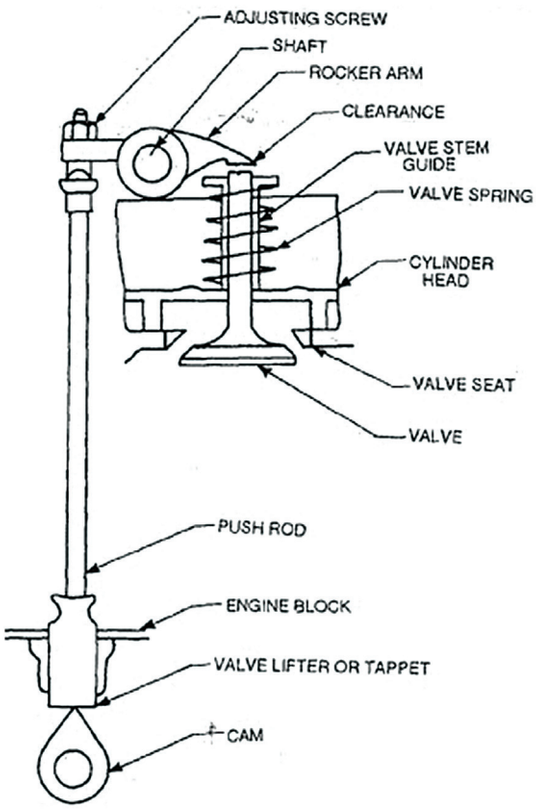

(a)

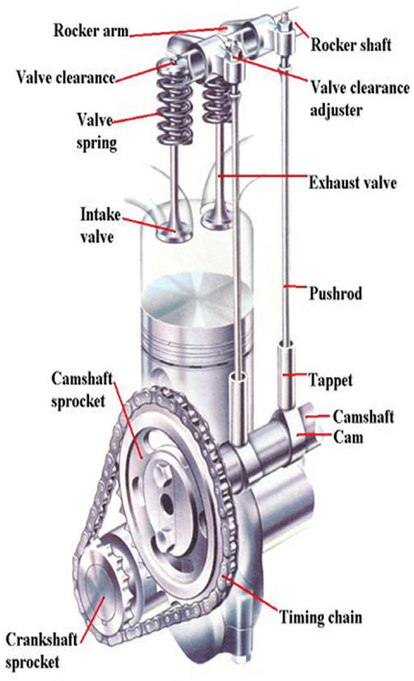

(b)

Figure 5.3.13(b) Over head Poppet Valve Mechanism

b) Straight Poppet Valve Mechanism:

Construction

In this mechanism, all the components of the over head valve except push rod, rocker arm were used. Cam on cam shaft touches tappet. Tappet directly touches valve stem. The valve is fitted with the help of valve spring and the spring lock.

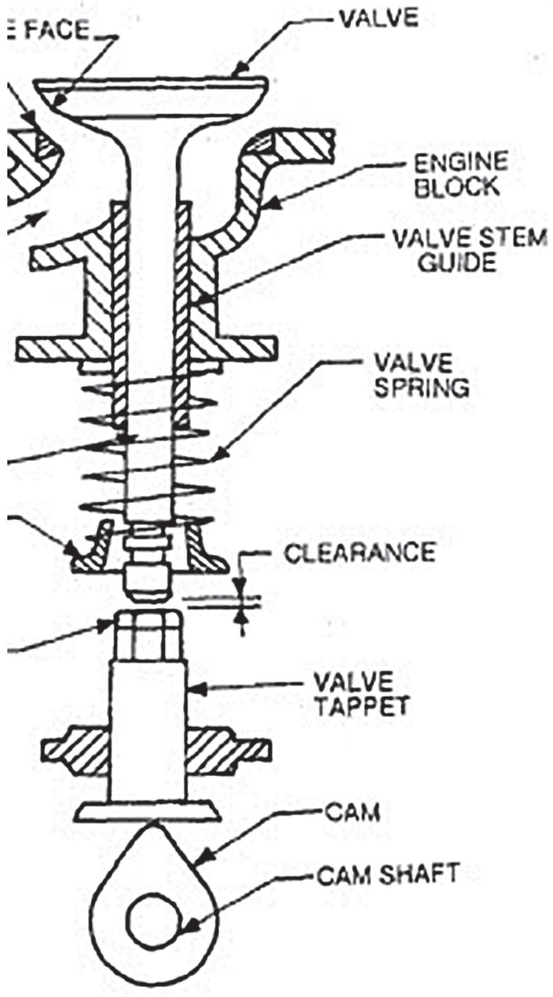

Figure 5.3.13(c) Straight Poppet Valve Mechanism

Operation

When the engine is started the flywheel rotates and the crank shaft starts to rotate. As the crank shaft and cam shaft are connected

AM_Unit_05.indd 95 12/20/2019 5:26:36 PM

by the timing gear and chain the cam shaft rotates. By the rotation of cam shaft the tappet started to move upwards. As the tappet is directly in contact with the valve stem when the tappet moves upwards the valve stem due to the lift of the tappet moves upwards and opens the port. By repeating the cam shaft rotation and tappet movement both inlet and exhaust valves open and close for inducting the charge and expelling the hot gases.

5.3.14 Manifold

Manifolds are the passages through which the air or air fuel mixture enters into the combustion chamber and exhaust gases from the combustion chamber are expelled out. The manifold are of two types they are,

a) Inlet Manifold

b) Exhaust Manifold

a) Inlet Manifold

Inlet manifold is used to pass the air from the filter of the diesel engine or air fuel mixture from carburetor of the petrol engine to the combustion chambers of all the cylinders. This intake manifold is generally made of cast iron. This is fitted at the top of the cylinder head.

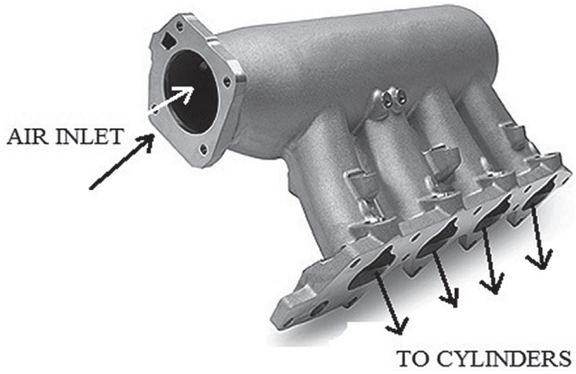

Figure 5.3.14(a) Inlet Manifold

b) Exhaust Manifold

This exhaust manifold is used to transmit the exhaust gases from the cylinder to the silencer. This is fitted between the cylinder head and silencer. This is made of cast iron.

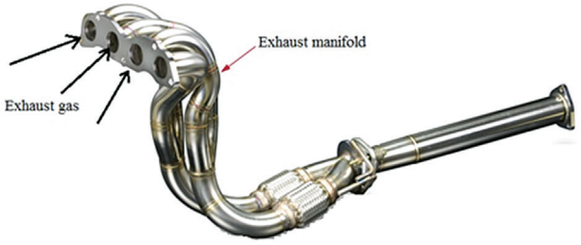

Figure 5.3.14(b) Exhaust Manifold

5.3.15 Flywheel

This is the important component of the engine. This arrangement is used for storing the energy and releasing the energy. It is used to rotate the crankshaft continuously from the initial condition due to its inertia. This is fitted at the end of the crankshaft. It

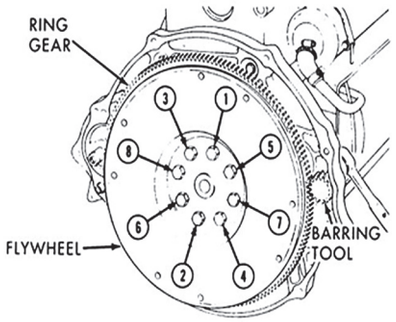

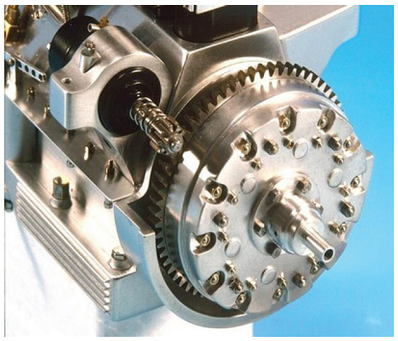

Figure 5.3.15 Flywheel

AM_Unit_05.indd 96 12/20/2019 5:26:37 PM

stores the power during expansion stroke and releases the energy during other strokes. It helps crank shaft to rotate continuously. The flywheel of any engine is generally made of cast iron or brass steel. Ring gear is situated at the periphery of the flywheel. This ring gear is in mesh with the pinion gear of the start motor which is used to start the engine.

5.3.16 Silencer

VBE2Z

After the power stroke of the engine the exhaust gases get expanded and expelled through the exhaust manifold. During the exhaust process when the gases are passed through exhaust manifold, due to pressure differential huge noise is produced. This leads to noise pollution. In order to reduce the noise pollution and to operate the engine in smooth condition silencer is used. Silencer acts as resistant for noise and converts the sound energy into heat. Fibre glass is generally used as the insulation material inside the silencer. Chambered, turbo, straight flow are the types of silencer used in automobile.



Figure 5.3.16 Silencer

5.4 FOUR STROKE PETROL ENGINE

Engine running with petrol as a fuel is called as petrol engine. If a power stroke is obtained once in every four stroke of piston (TDC to BDC / BDC to TDC), then the engine is said to be four stroke petrol engine.

Construction

The figure shows the construction of a single cylinder petrol engine. In this the reciprocating motion of a cylinder is converted into rotary motion of crankshaft with the help of connecting rod. One end of connecting rod is connected to piston and another end it is connected to crankshaft. In crankshaft, flywheel is attached at one end and vibration damper, fan belt pulley is attached at the other end. Intake valve, exhaust valve, spark plug is mounted above the top of the cylinder. The fresh air fuel mixture is inducted through intake valve and the burnt gases are sent out through exhaust valve. The opening and closing of valve are made by camshaft. The camshaft and crankshaft are connected by means of timing gear. The four stroke petrol engine is shown in Figure 5.4.

In any internal combustion engine, the following definite sequence of events called strokes namely

AM_Unit_05.indd 97 12/20/2019 5:26:37 PM

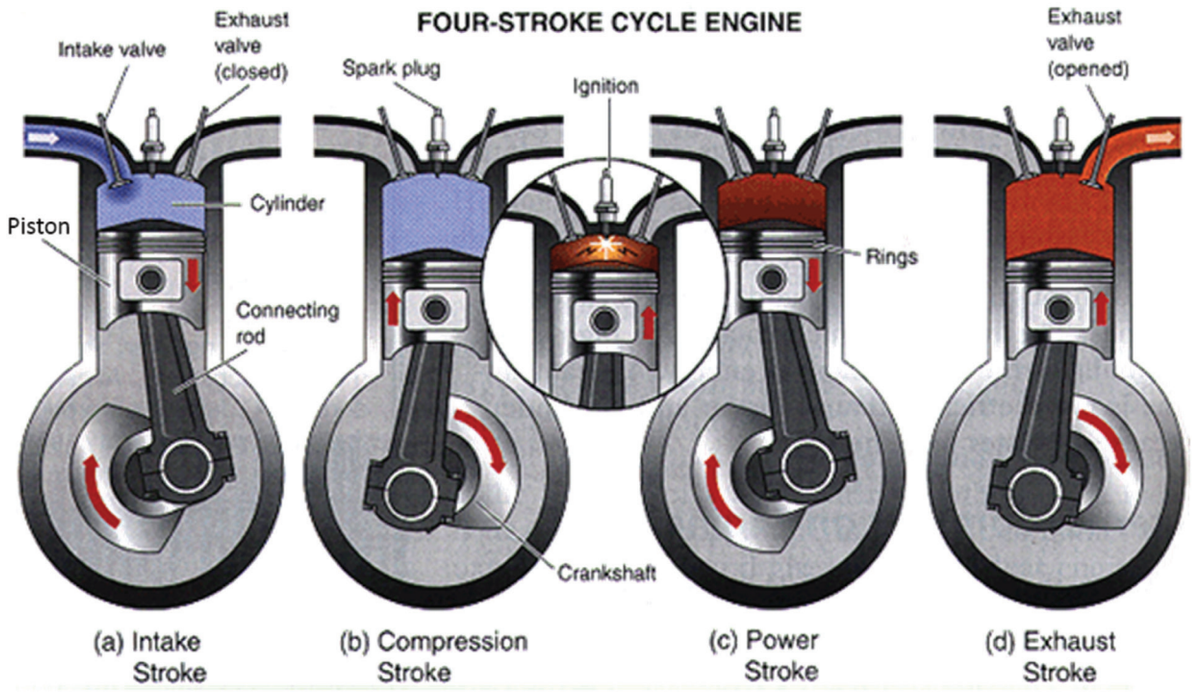

Figure 5.4 Working of Four Stroke Petrol Engine

a. Suction Stroke,

B. Compression Stroke,

C. Power Stroke And

D. Exhaust Stroke

The above four strokes will form a cycle. If the cycle of operations is completed in four strokes of the piston or two revolutions of the crankshaft or one revolution of the camshaft, then it is called as a four-stroke engine.

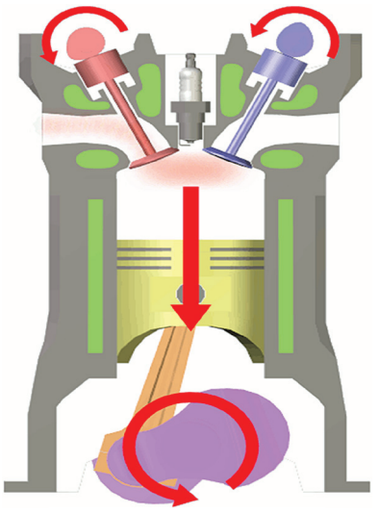

Figure 5.4(a)

a) Suction Stroke

During the suction stroke, the piston moves downward from Top Dead Centre to Bottom Dead Centre. The intake valve is open and exhaust valve is closed. This downward movement of the piston produces a partial void, or vacuum, in the cylinder, and air – fuel mixture rushes into the cylinder through the opened intake valve.

b) Compression Stroke

The charge taken into the cylinder during the suction stroke is compressed by the return stroke of the piston. The piston travels from bottom dead centre to top dead centre. During compression stroke both inlet and exhaust valves are in closed position.

AM_Unit_05.indd 98 12/20/2019 5:26:38 PM

The mixture which fills the entire cylinder volume is now compressed into the clearance volume. At the end of the compression stroke the mixture is ignited with the help of a spark plug located on the cylinder head.

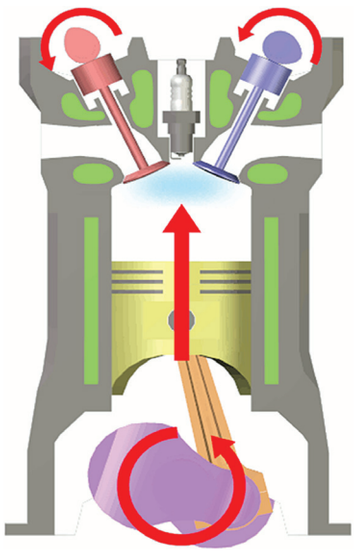

Figure 5.4(b)

c) Power Stroke

Rapid combustion of the fuel releases heat and there is an increases in the temperature inside the combustion chamber. The increased temperature of the gases also produces an increased pressure in the combustion chamber. The high pressure of the gases acting on the face of the piston causes the piston to move from TDC to BDC. This reciprocating motion is converted into the rotary motion of crankshaft through connecting rod. During power stroke, both inlet and exhaust valves are in closed condition. As the piston travels downward, there will be drop in combustion pressure and temperature as the volume increases. At the end of power stroke, exhaust stroke will be started.

d) Exhaust Stroke

At the end of power stroke, exhaust stroke will be started. During this stroke, the exhaust vavle will be open and the inlet value will be closed. When the piston from BDC to TDC, the burnt air fuel mixture is sent out through exhaust valve.

At the end of exhaust stroke, the intake stroke of the next cycle starts and this keep the engine in running condition.

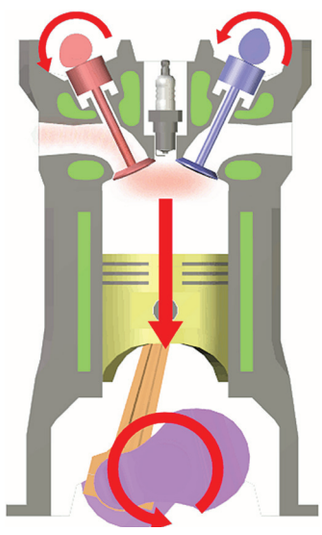

Figure 5.4(c)

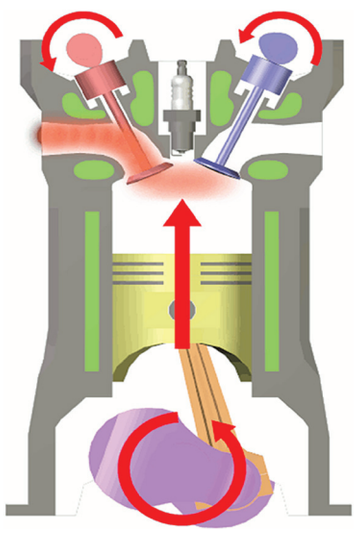

Figure 5.4(d)

AM_Unit_05.indd 99 12/20/2019 5:26:38 PM

Scavenging

At the end of exhaust stroke the exhaust valve is open and at the start of intake stroke, the inlet valve is kept open. At this time, fresh air – fuel mixture for the next cycle will pushes out the exhaust gases of the previous cycle. Thus, Scavenging is the process of removal of exhaust gases by blowing in fresh air.

Valve Over Lap

At the end of exhaust stroke the exhaust valve is open and at the start of intake stroke, the inlet valve is kept open. The time duration in which both the valves are kept open is called as valve overlap.

Advantages

- ❒ Fuel economy
- ❒ Lubrication oil Consumption is less
- ❒ Can be used in different vehicle
- ❒ Thermal Efficiency is high
- ❒ Volumetric Efficiency is high
- ❒ Low wear and tear

Disadvantages

- ❒ Number of parts are more
- ❒ Mechanical Efficiency is low
- ❒ Maintenance cost is more
- ❒ Complicated design
- ❒ More space is required

e) Valve Timing Diagram For A Four Stroke Petrol Engine

In a four stroke engine, an engine cycle to produce power is done on every two revolution of crankshaft. Theoretically it may be assumed that the valves open and close and the spark (or injection of fuel)occurs at the engine dead centres. However, in actual operation, the valves do not operate at dead centre positions but operate some degree on either side of the dead centres. The opening occurs earlier and the exhaust continues even at later crank angles. The ignition is also timed to occur in advance of the completion of compression stroke.

The timings of this sequence of events can be shown graphically in terms of crank angles from dead centre position. This diagram is known as valve timing diagram. It is shown in figure 5.4(e).

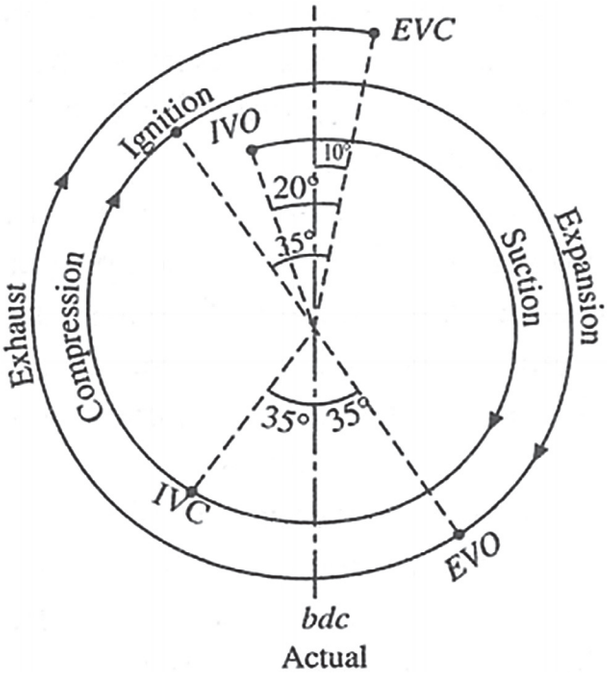

TDC = Top dead centre, BDC = Bottom dead centre, IVO = Inlet valve opens IVC = Inlet valve closes, EVO = Exhaust valve opens, EVC = Exhaust valve closes

Figure 5.4(e) Valve Timing Diagram For Four Stroke Petrol Engine

AM_Unit_05.indd 100 12/20/2019 5:26:38 PM

Intake valve timing:

The inlet valve will be open 10° to 30° before TDC (i.e during exhaust stroke), remain open during suction stroke and closes at 30° to 40° after BDC (i.e. during compression stroke). This gives the inlet valve a total opening of 220° of crankshaft rotation. This will ensure the full induction of fresh charge in cylinder during suction stroke.

After the inlet valve closed in the compression stroke, the air fuel mixture is compressed by the piston. This will increase the pressure and temperature in the cylinder.

With both intake and exhaust valve are in closed condition, the spark will be introduced by the ignition system through spark plug at 20° to 40° before TDC. These will initialise the combustion and the air fuel mixture will be burned in the combustion chamber. Thus the chemical energy of the fuel is converted into heat energy.

Exhaust valve timing:

The exhaust valve opens at 30° to 60° before the completion of power stroke. Due to this, the gases have an outlet for expansion, which removes the greater part of the burnt gases. The valves remain open during open during the exhaust stroke and it is closed at 20° after TDC, during the intake stroke of the next cycle.

Scavenaging

The inlet valve will be open 10° to 30° before TDC and at the same time the exhaust valve is already in the open condition. This will make the fresh charge to push out the burnt out gases from the cylinder. Scavenging will be made till 20°After TDC.

Valve over Lap

The portion of the operating cycle in which, when the piston is passing TDC (top dead centre) on the exhaust stroke, both the intake and exhaust valves are open. It is usually expressed in degrees of crankshaft rotation. Valve overlap is necessary for the efficient flow of gases in and out of the combustion chamber.

5.5 TWO STROKE PETROL ENGINE

The two stroke cycle engine completes one power stroke in one revolution of a crankshaft.

Construction

Inside the engine, the small end of the connecting rod is connected to the piston with the help of piston pin. The big end of the connecting rod is connected to the crankpin of the crankshaft. When the crankshaft rotates, the piston will reciprocate on the cylinder and vice versa. There is no inlet and exhaust valves as in case of four-stroke engine but consists of the inlet port (IP), an exhaust port (EP) and transfer port (TP). The fresh charge enters into the crankcase through inlet port. Transfer port is used to transfer the compressed charge from crankcase to the cylinder. Exhaust port is used to transfer the burnt gases out of the engine. The movement of the piston will open and closes the ports. A spark plug will be placed in the engine head.

AM_Unit_05.indd 101 12/20/2019 5:26:38 PM

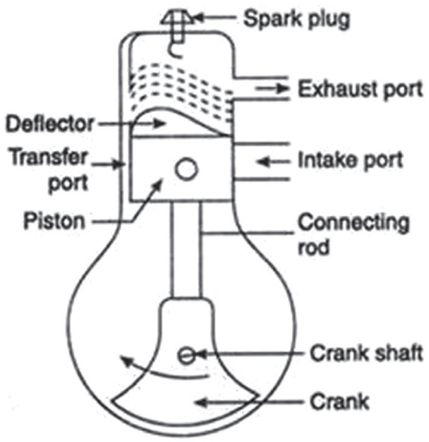

Figure 5.5(a) Two Stroke Petrol Engine

Working principle

In two stroke engine, all the four events namely suction, compression, power and exhaust cannot be distinctly identified. For each revolution of crankshaft or for every two stroke of piston, a working / power stroke is obtained. Hence the cycle of operation can be explained with two stroke of piston movement namely Upward stroke and Downward stroke.

Upward Stroke

During upward stroke, the piston moves from BDC to TDC. It expels the burnt gases to the atmosphere through the exhaust port. It closes the transfer port and then the exhaust port. Then it compresses the already inducted charge (air-fuel mixture) in the combustion chamber of the cylinder. At the end of the upward stroke, the ignition of the fresh charge is takes place by the spark plug.

Further, the upward movement of the piston a partial vacuum is created in the crankcase and this allows the entry of the fresh charge into the crankcase through uncovered inlet port. The exhaust port and the inlet port remains covered when the piston at the TDC.

Downward stroke:

As soon as the combustion of the fresh charge takes place, a large amount of the hot

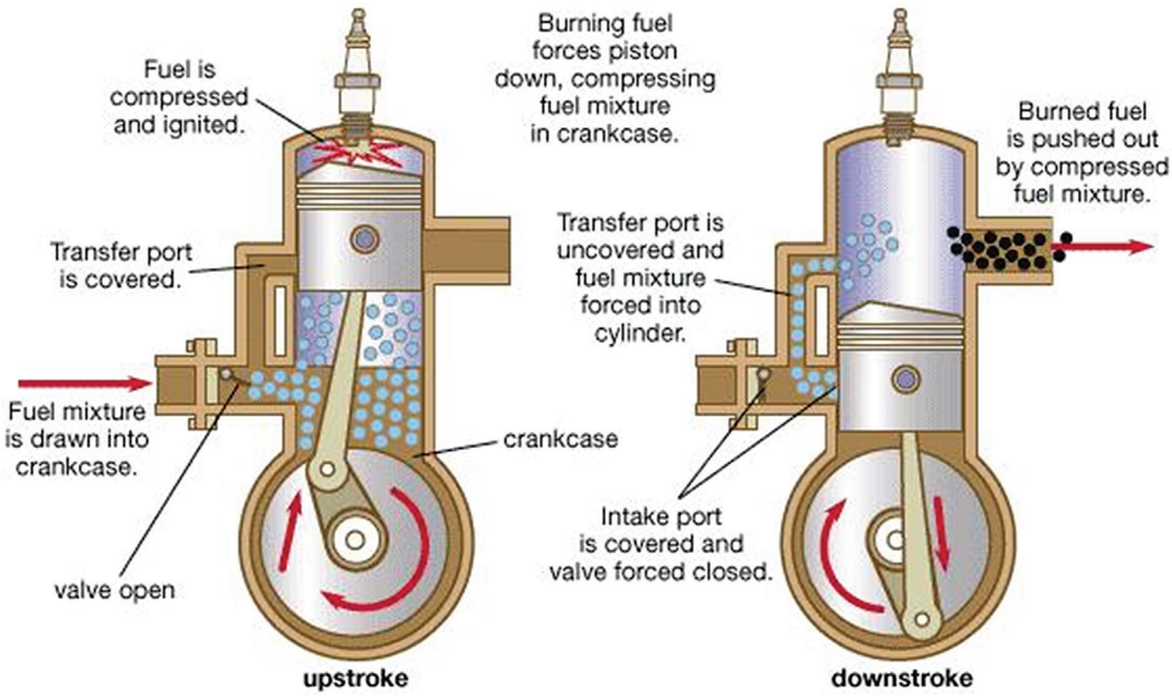

Figure 5.5(b) Upword and Downword Stroke of Two Stroke Petrol Engine

AM_Unit_05.indd 102 12/20/2019 5:26:39 PM

gases is produced and this exerts a very high pressure force on the top of the piston. Due to this high pressure force, the piston moves downward and rotates the crankshaft and does useful work.

During this stroke the inlet port is covered by the piston and the new charge is compressed in the crankcase due to the downward movement of piston.

Further downward movement of the piston uncovers first the exhaust and the exhaust starts through the exhaust port.

Further downward movement of the piston uncovers port the transfer port and the charge through it is forced into the cylinder.

The charge strikes the deflector on the piston crown, rises to the top of the cylinder and pushes out most of the exhaust gases.

The piston is now at BDC position. The cylinder is completely filled with the fresh charge but it is somewhat diluted with the exhaust gases.

Finally the cycle event is then repeated and the power stroke is obtained for the every single revolution of the crankshaft.

Reason for less power in two stroke engine

- The fresh air fuel charge is mixed with exhaust gas and sent out before combustion
- The charge is diluted by the burnt gases due to incomplete scavenging.
- Combustion is improper as lubrication oil is mixed with fresh charge
- Volumetric efficiency of the engine is low.

Advantages:

- Smoother in operation
- It is simpler in construction and mechanism.

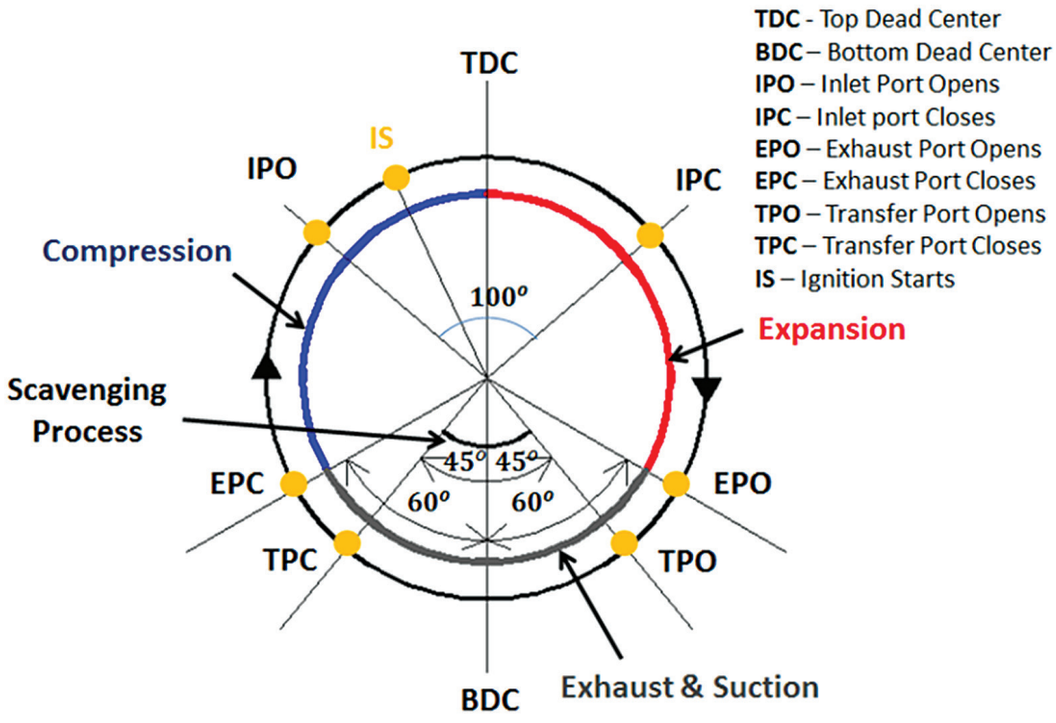

Figure 5.5(c) Port Timing diagram of Two Stroke Petrol Engine

AM_Unit_05.indd 103 12/20/2019 5:26:39 PM

- ❒ Power developed by the two stroke engine is twice that developed by the four stroke engine for the same engine speed and volume.
- ❒ Cost of the engine is less since less no. of parts
- ❒ Less maintenance since fewer spare parts due to its simple design
- ❒ Low manufacturing cost
- ❒ It has high mechanical efficiency.
- ❒ A two stroke engine is more compact, light and requires less space

Disadvantages:

- ❒ It has high fuel consumption
- ❒ It does more consumption of the lubricating oil.
- ❒ Not suitable for heavy vehicles
- ❒ There is a greater wear and tear of moving parts.
- ❒ Thermal efficiency is less than four stroke engine.
- ❒ The charge is diluted by the burnt gases due to incomplete scavenging.
- ❒ It produces greater noise.

5.6 COMPARISON OF TWO STROKE AND FOUR STROKE ENGINE

The two stroke and four stroke engine are compared and their differences are given below (Table 5.6).

Table 5.6 Differnce Between Two Stroke and Four Stroke Engine

S.no	Two Stroke Engine	Four Stroke Engine
1.	It has one revolution of crankshaft within one power stroke.	It has two revolution of crankshaft between one power strokes.
2.	2 strokes are required to complete a cycle.	4 strokes are required to complete a cycle.
3.	It requires lighter flywheel because it generates more balanced force due to one revolution for one power stroke.	It requires heavy flywheel because it generates unbalance force due to two revolutions for one power stroke.
4.	One non-power stroke in a cycle	Three non-power stroke in a cycle
5.	Engines are lighter	Engines are heavier
6.	Engine construction is simple.	The Engine construction is a bit complicated
7.	Ports are used for inlet and outlet of air fuel mixture	Valves are used for inlet and outlet of air fuel mixture
8.	Ports are opened and closed by piston movements	Valves are operated by separate valve operating mechanism.
9.	Less no. of moving parts	More no. of moving parts
10.	Volumetric efficiency is less	Volumetric efficiency is more
11.	Thermal efficiency is less	Thermal efficiency is more
12.	Two stroke engines are less efficient and generate more smoke.	Four stroke engines are more efficient and generate less smoke.

AM_Unit_05.indd 104 12/20/2019 5:26:39 PM

S.no	Two Stroke Engine	Four Stroke Engine
13.	These engines are easy to manufacture.	These engines are comparatively hard to manufacture.
14.	More wear and tear occurs	Less wear and tear occurs.
15.	A part of air fresh air fuel mixture mixes with the exhaust gas, hence less power.	Burnt out gases is not mixed with fresh charge, hence more power.
16.	Fuel consumption is more.	Fuel consumption is less
17.	High power-to-weight ratio	Less power-to-weight ratio
18.	More noise	Less noise
19.	Air cooled engine.	Air / water cooled engine.
20.	Works based on Clerk cycle.	Works based on otto / diesel cycle
21.	Easy lubrication due to lubrication oil mix with the fuel.	Complex lubrication mechanism
22.	Consumption of lubrication oil is more because some oil burns with fuel.	Consumption of lubrication oil is less
23.	Less weight	More weight
24.	Used in scooter, mopeds, auto rickwsaw.	Used in motor cycles, autoricksaw, car, bus, lorry, trucks, tractors etc.

5.7 FOUR STROKE DIESEL ENGINE

The engine which uses diesel as a fuel is called as diesel engine. The compression ratio for diesel engine is higher and it will be ranging from 16 : 1 to 20 : 1. The compression ratio for a petrol engine is 10:1. During suction stroke, the air alone is inducted. The fuel is pressured and distributed to various cylinders through the fuel injection pump. Diesel injector will be located in cylinder head for injecting the diesel fuel at high pressure. There is no spark plug. All the remaining parts are similar to petrol engine.

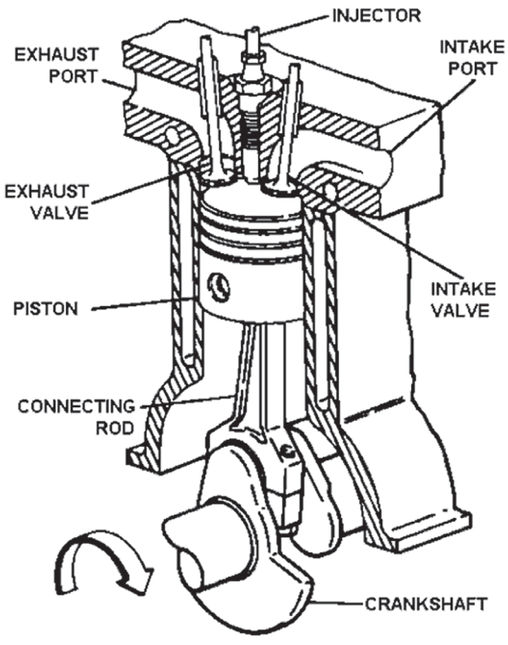

Figure 5.7(a) Four Stroke Diesel Engine

Construction

The construction of a single cylinder diesel engine is shown in above figure. The reciprocating motion of a piston is converted into rotary motion of a crankshaft through connecting rod. The piston and the crankshaft are connected by means of a connecting rod. The flywheel is attached to the one end of the

AM_Unit_05.indd 105 12/20/2019 5:26:39 PM

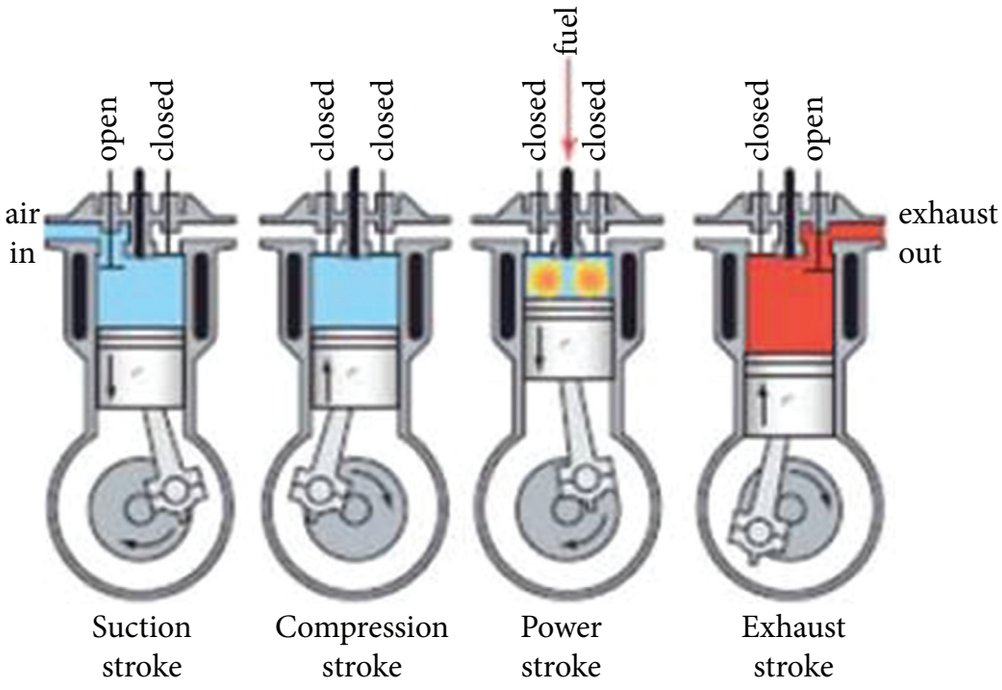

Figure 5.7(b) Working of Four Stroke Diesel Engine

crankshaft and on another side a pulley is attached to it. Inlet valve, exhaust valve and fuel injector are located on the engine head. The inlet valve will allow the air inside the cylinder, the fuel injector will inject the fuel and the exhaust valve will sent the burnt gases to the atmosphere. The valves are operated by the camshaft. The camshaft is driven by crankshaft through timing gear.

The following sequence of events will occur continuously for the engine operation. The figure shows the sequence of events

- ❒ Air alone induced inside the cylinder
- ❒ Air alone compressed
- ❒ Finely automised diesel fuel is injected onto the compressed air followed by combustion
- ❒ Burnt gases are let out from the cylinder.

The above sequence of operation forms a cycle and for each operation, a piston stroke is required. Thus for four operation, four strokes are required and hence it is called as four stroke engine. The four strokes are namely called

i. Suction Stroke
Ii. Compression Stroke
Iii. Power Stroke
Iv. Exhaust Stroke

i) Suction Stroke

In this stroke, the piston moves down from the top dead centre towards the bottom dead centre. The inlet valve opens and the air is drawn into the cylinder due to the vacuum created inside the cylinder. To fill the vacuum, the air is entered inside the cylinder. The inlet valve closes at the end of the stroke and the exhaust valve remains closed during this stroke.

AM_Unit_05.indd 106 12/20/2019 5:26:40 PM

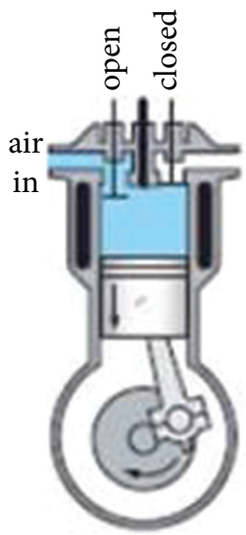

Figure 5.7.1(a) Suction Stroke

ii) Compression Stroke

In this stroke, the piston moves up from bottom dead centre to top dead centre. During this stroke, both inlet and exhaust valves are closed. The air drawn into the cylinder during suction stroke is entrapped inside the cylinder and compressed due to upward movement of the piston. The fuel is injected at the end of the compression stroke by the injector and the fuel ignites.



Figure 5.7.1(b) Compression Stroke

iii) Power Stroke

The hot gases which are produced due to ignition of fuel during compression stroke and compressed air now expand adiabatically, in the cylinder pushing the piston down towards the BDC. This downward movement of the piston is converted into rotary motion of the crankshaft and hence work is done. During expansion, the pressure and the temperature reduce. In this stroke, both inlet and exhaust valve remain closed.



Figure 5.7.1(c) Power Stroke

iv) Exhaust Stroke

At the end of the power stroke, exhaust stroke will start. In this stroke, the piston again moves upward. The exhaust valve opens, while inlet valve is closed. A greater part of the burnt fuel gases escapes due to their own expansion. The upward movement of the piston pushes the remaining gases out through the open exhaust valve. At the end of an exhaust stroke, the exhaust valve closes and the cycle is thus completed and suction stroke of next cycle is started.

AM_Unit_05.indd 107 12/20/2019 5:26:41 PM

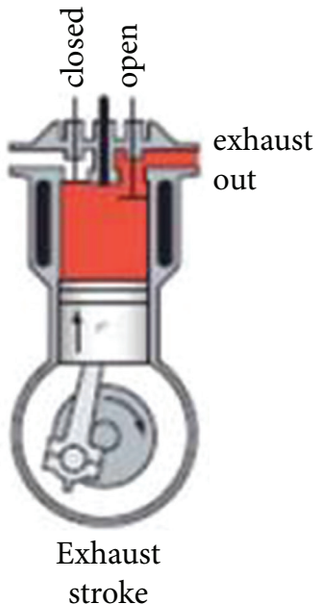

Figure 5.7.1(d) Exhaust Stroke

Scavenging

During the end of exhaust stroke and start of the suction stroke, the inlet valve and exhaust valve will be kept open condition. This will make the fresh charge to push out the burnt out gases from the cylinder and this phenomenon is called as scavenging.

Valve over Lap

The portion of the operating cycle in which both the intake and exhaust valves are kept open is called as valve overlap. It is usually expressed in degrees of crankshaft rotation. Valve overlap is necessary for the efficient flow of gases in and out of the combustion chamber.

Advantages

- ❒ Operating cost is less
- ❒ Lubrication oil consumption is less
- ❒ Can be used in all types of vehicle
- ❒ Thermal Efficiency is high
- ❒ Volumetric Efficiency is high
- ❒ Wear and tear is less

Disadvantages

- ❒ No. of moving parts is more
- ❒ Mechanical Efficiency is low
- ❒ Maintenance cost is more
- ❒ Complicated design
- ❒ More space is required

e) Valve timing diagram of four stroke diesel engine

The valve timing diagram for a four stroke cycle diesel engine is shown in Figure 5.7 (a) below:

In a four stroke diesel engine, an engine cycle to produce power is done on every two revolution of crankshaft. It may be assumed that the valves open and close and injection of fuel occurs at the engine dead centres. However, in actual operation, the valves do not operate at dead centre positions but operate some degree on either side of the dead centres. The opening occurs earlier and the exhaust continues even at later crank angles. The fuel injection is also timed to occur in advance of the completion of compression stroke. The diagram which shows the position of crank of four stroke engine at the beginning and at the end of suction, compression, expansion and exhaust of the engine are called as valve timing diagram. This diagram is known as valve timing diagram.

Inlet valve opening and closing:

In an actual engine, the inlet valve begins to open 10° to 25°before the piston reaches the TDC during the exhaust stroke. This is necessary to ensure that the valve will be fully open when the piston reaches the

AM_Unit_05.indd 108 12/20/2019 5:26:41 PM

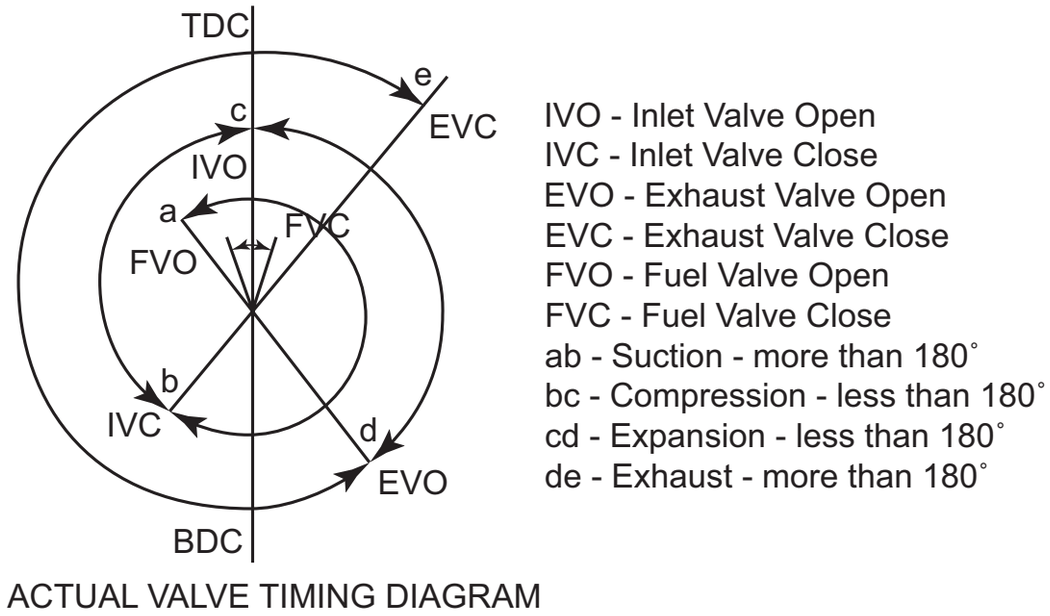

Fig 5.7(a) Valve Timing Diagram of Four Stroke Diesel Engine

TDC. If the inlet valve is allowed to close at BDC, the cylinder would receive less amount of air than its capacity. To avoid this, the inlet valve is kept open for 25°to 45°after the BDC, during the compression stroke. This will ensure the full induction of fresh charge in cylinder during suction stroke.

After the inlet valve closed in the compression stroke, the air is compressed by the upward motion of the piston. This will increase the pressure and temperature inside the cylinder.

With both intake and exhaust valve are in closed condition, the fuel injector will inject the diesel fuel at high pressure at 5° to 10° before TDC. The temperature of the compressed air at the end of compression stroke is sufficient enough to initialise the finely automised diesel fuel for combustion. The air fuel mixture will be burned in the combustion chamber. Thus the chemical energy of the fuel is converted into heat energy. Based on the speed of the engine, the fuel is injected even 25° before TDC.

Exhaust valve timing:

The exhaust valve opens at 30° to 60° before the completion of power stroke. Due to this, the gases have an outlet for expansion, which removes the greater part of the burnt gases. The valves remain open during open during the exhaust stroke and it is closed at 20° after TDC, during the intake stroke of the next cycle.

Scavenging

The inlet valve will be open 10° to 30° before TDC during exhaust stroke and at the same time the exhaust valve is already in the open condition. This will make the fresh charge to push out the burnt out gases from the cylinder. Scavenging will be made till 20° after TDC.

AM_Unit_05.indd 109 12/20/2019 5:26:41 PM

Valve over lap

The portion of the operating cycle in which, when the piston is passing TDC (top dead centre) on the exhaust stroke, both the intake and exhaust valves are open. It is usually expressed in degrees of crankshaft rotation. Valve overlap is necessary for the efficient flow of gases in and out of the combustion chamber. It is will vary with respect to size and configuration of engine.

5.8 TWO STROKE DIESEL ENGINE

When the cycle of operation of engine completes in one revolution of the crankshaft or two stroke of the piston and one power stroke is obtained in each revolution of a crankshaft, then the engine is called as two stroke engine.

Construction

Inside the engine, the small end of the connecting rod is connected to the piston with the help of piston pin. The big end of the connecting rod is connected to the crankpin of the crankshaft. When the crankshaft rotates, the piston will reciprocate on the cylinder and vice versa. There is no inlet and exhaust valves as in case of four-stroke engine but consists of the inlet port (IP), an exhaust port (EP) and transfer port (TP). The fresh charge enters into the crankcase through inlet port. Transfer port is used to transfer the compressed charge from crankcase to the cylinder. Exhaust port is used to transfer the burnt gases out of the engine. The movement of the piston will open and closes the ports. A fuel injector is placed in the engine head.

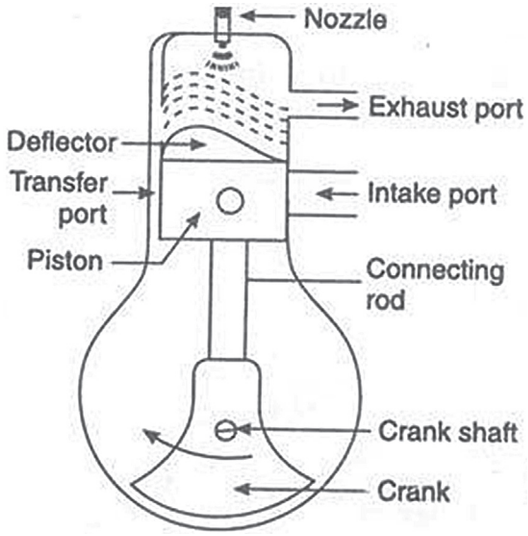

Figure 5.8(a) Two Stroke Diesel Engine

Working principle

In two stroke engine, all the four events namely suction, compression, power and exhaust cannot be distinctly identified. For each revolution of crankshaft or for every two stroke of piston, a working / power stroke is obtained. Hence the cycle of operation can be explained with two stroke of piston movement namely Upward stroke and Downward stroke.

Upward Stroke

During upward stroke, the piston moves from BDC to TDC. It expels the burnt gases to the atmosphere through the exhaust port. It closes the transfer port and then the exhaust port. Then it compresses the already inducted charge (air-fuel mixture) in the combustion chamber of the cylinder. At the end of the upward stroke, the diesel fuel is injected at high pressure through fuel injection nozzle and this will automise the fuel. The temperature of the compressed air is sufficient enough to ignite the diesel and combustion is take place.

AM_Unit_05.indd 110 12/20/2019 5:26:41 PM

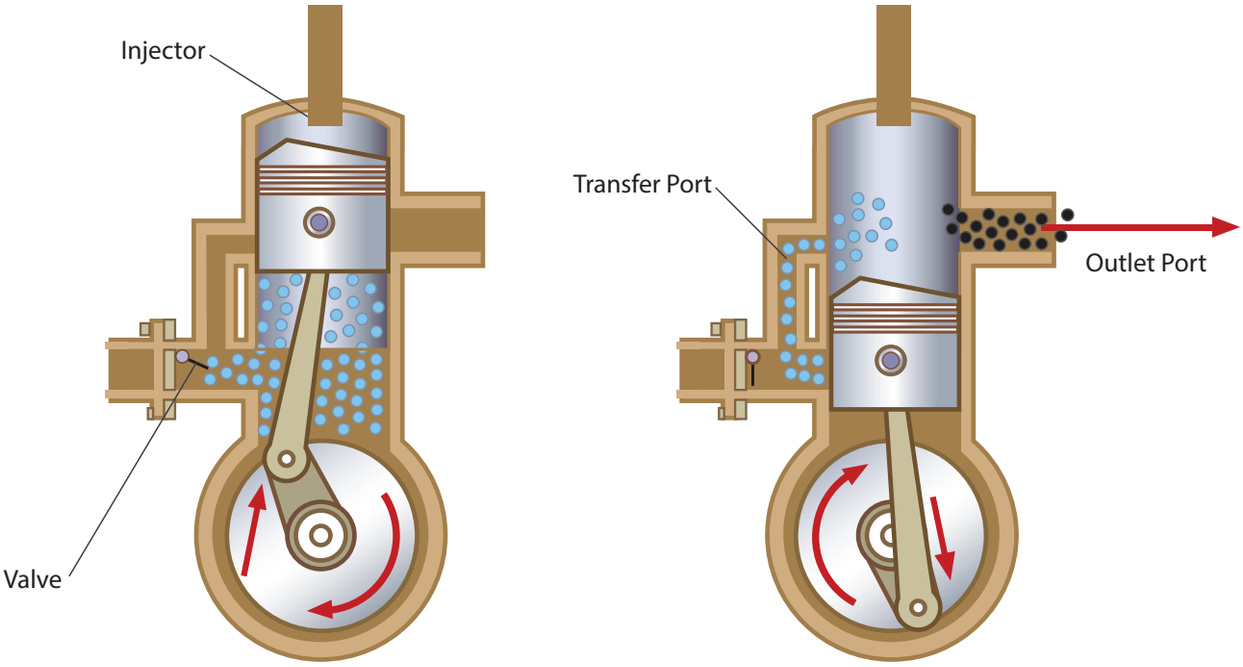

Fig 5.8(b) Upward and Downward Stroke of Two Stroke Diesel Engine

Further, the upward movement of the piston a partial vacuum is created in the crankcase and this allows the entry of the fresh charge into the crankcase through uncovered inlet port. The exhaust port and the inlet port remains covered when the piston at the TDC.

Downward stroke:

As soon as the combustion of the fresh charge takes place, a large amount of the hot gases is produced and this exerts a very high pressure force on the top of the piston. Due to this high pressure force, the piston moves downward and rotates the crankshaft and does useful work.

During this stroke the inlet port is covered by the piston and the new charge is compressed in the crankcase due to the downward movement of piston.

Further downward movement of the piston uncovers first the exhaust and the exhaust starts through the exhaust port.

Further downward movement of the piston uncovers port the transfer port and the fresh air is forced into the cylinder.

The fresh air strikes the deflector on the piston crown, rises to the top of the cylinder and pushes out most of the exhaust gases.

The piston is now at BDC position. The cylinder is completely filled with the fresh charge but it is somewhat diluted with the exhaust gases.

Finally the cycle event is then repeated and the power stroke is obtained for the every single revolution of the crankshaft.

AM_Unit_05.indd 111 12/20/2019 5:26:41 PM

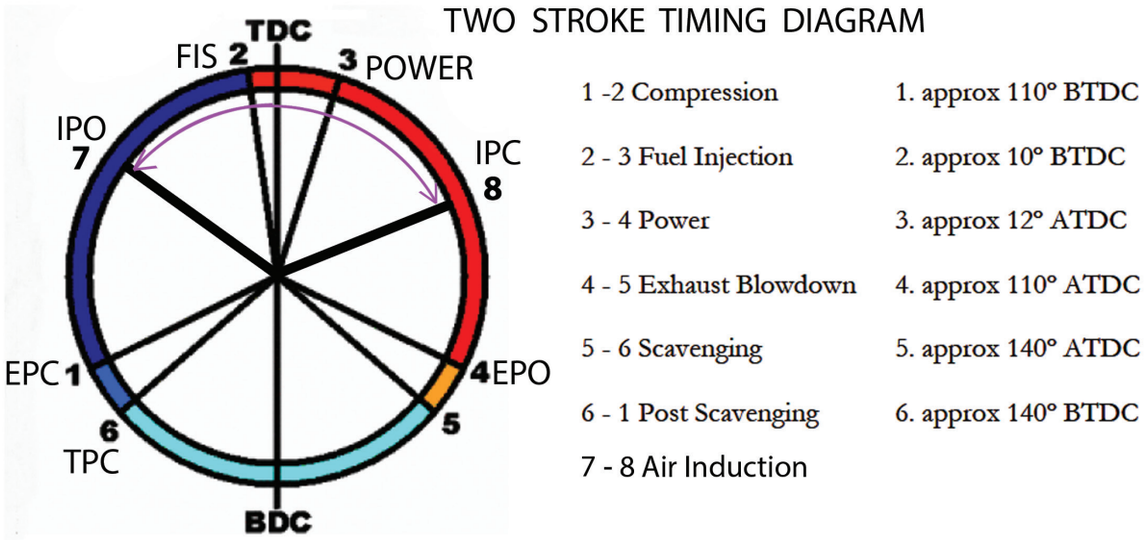

Fig 5.8(c) Port Timing Diagram of Two Stroke Diesel Engine

Student Activity

1. Students should visit the nearby workshops to study the types of petrol and diesel engines, and also to study the purpose of piston, connecting rod, crank shaft, camshaft, timing gear and flywheel.
2. Students should visit the nearby engine service centre and should prepare a sketch of engine block, crank case, cylinder head and gasket.

Glossary

Converted	-	மாற்றம்
Compressed	-	அழுத்துதல்
Combustion	-	எரியூட்டுதல்
Prolonged	-	நீடித்த
Surrounded	-	சுற்றுப்புறம்
Liner	-	உரை
Combustion Chamber	-	எரியும்அறை
Lubrication	-	உயவிடுதல்
Top Dead Centre	-	மேல்நிலை
Bottom Dead Centre	-	கீழ்நிலை

AM_Unit_05.indd 112 12/20/2019 5:26:42 PM

References

1. Kirpal Singh, "Automobile Engineering Vol 1 & 2", Standard Publishers, Seventh Edition, 1997, New Delhi.
2. Jain, K.K., and Asthana. R.B., "Automobile Engineering" Tata McGraw Hill Publishers, New Delhi, 2002.
3. Ganesan V. Internal Combustion Engines, Third Edition, Tata McGraw - Hill, 2007.
4. B.P. Pundir, I.C. engine combustion and emissions. Narosa Publishing House, July 2010.
5. Rajput R.K. Internal Combustion Engines, Laxmi Publications (P) Ltd, 2006.
6. Ramalingam, K.K., Internal Combustion Engines, SciTech Publications (India) Pvt. Ltd., 2004.

Webliography

1. https://en.wikipedia.org/wiki/Engine
2. https://en.wikipedia.org/wiki/Two-stroke_engine
3. https://en.wikipedia.org/wiki/Four-stroke_engine
4. https://convergecfd.com/applications/internal-combustion-engines
5. https://www.learncax.com/knowledge-base/blog/by-category/fundamentals/insights-on-cfd-for-combustion-in-ic-engines
6. https://en.wikipedia.org/wiki/Emission_standard
7. https://www.mercedes-benz.com/en/mercedes-benz/vehicles/aggregates/powertrain-engines/

SAMPLE QUESTIONS

Choose the correct answer:

1. Which material is used for manufacturing cylinder block?
   a) Gray cast iron or aluminum alloy
   b) Cast iron or steel
   c) Brass or steel
2. Which liner has directly contact with cooling water?
   a) Dry liner
   b) Wet liner
   c) None
3. Conecting rod is used to
   a) to connect crank shaft and cylinder head
   b) to connect crank shaft and piston
   c) to connect crank shaft and cylinder block
4. Which type of piston pin is mostly used now a days?
   a) semi floating type
   b) full floating type
   c) fixed type

AM_Unit_05.indd 113 12/20/2019 5:26:42 PM

5. Order of the strokes for getting power.
   a) Exhaust,suction, power, compression
   b) Suction, exhaust power, compression
   c) suction, compression power, exhaust
6. Which is used to open the valve in Engine?
   a) Crank shaft.
   b) Cam shaft
   c) Fly wheel
7. Which liner is does not contact with cooling water?
   a) Dry liner
   b) Wet liner
   c) None
8. Where is vibration Damber located?
   a) In front of the Crank shaft.
   b) Back side of the crank shaft
   c) In front of the Cam shaft.
9. Which indicates cycle of operation engine?
   a) Exhaust, suction, power, compression
   b) Suction, exhaust power, compression
   c) suction, compression power, exhaust
10. Which is used to prevent leakage between cylinder and cylinder head?
    a) Gasket
    b) Oil seal
    c) Dust cover

2MPF7

Answer the following questions:

1. Who is invented Petrol Engine?
2. Who is invented Diesel Engine?
3. Write any 10 important parts of I.C. Engine.
4. What are the two types of cylinder liners?
5. What is the purpose of Gasket?
6. State any five method to control the expansion of the piston due to over heat.
7. Name the types of Piston.
8. What is meant by Vibration Damper?
9. In how many ways Piston and connecting rod are connected? Mention the names.
10. Draw a neat sketch of Over head Puppet Valve mechanism and explain the same.
11. Draw a neat sketch of Straight Puppet mechanism and explain the same.
12. Draw a neat of Four Stroke Petrol Engine and explain the working principle.

AM_Unit_05.indd 114 12/20/2019 5:26:42 PM

Unit 6 Intake, Exhaust System and Combustion Chamber

Contents

6.0 Introduction
6.1 Effects of Pollutants
6.2 Fuel Tank
6.3 Fuel Filter
6.4 Air Filter
- 6.4.1 Dry Type Air Cleaner
- 6.4.2 Oil Bath Type Air Cleaner
- 6.4.3 Oil Wetted Type Air Cleaner

6.5 Fuel Pump
- 6.5.1 Petrol Fuel Pumps
- 6.5.2 Diesel Fuel Injection Pump

6.6 Feed Pump
- 6.6.1 Single Acting Pump
- 6.6.2 Double Acting Pump

6.7 Inlet Manifold
6.8 Carburettors
6.9 Fuel Injectors
6.10 Nozzle
- 6.10.1 Single Whole Nozzle
- 6.10.2 Multi Whole Nozzle
- 6.10.3 Long Stem Nozzle

6.11 Combustion Chambers
- 6.11.1 Types of Combustion Chambers of Diesel Engines

6.12 Exhaust System
- 6.12.1 Exhaust Manifold
- 6.12.2 Exhaust Pipe
- 6.12.3 Exhaust Muffiers

6.13 Catalytic Convertors
6.14 Engine Tune-Up Procedure
6.15 Pollution

AM_Unit_06.indd 115 31-01-2019 17:49:21

Learning Objectives

- To learn about the engine emissions along with its impact on humans and environment.
- To learn about the engine firing procedure.

6.0 INTRODUCTION

In the earth, all the living organisms, animals and human beings are living with the help of oxygen present in nature (or) atmosphere. For producing power and food they use energy obtained from burning the fuel. Human beings use different fuels to get their heat energy according to their needs. In the same way they use heat energy obtained from burning the fuel for operating their automobiles. Human beings use different approaches for burning the fuels to produce energy or power. For attaining such strategies, they using separate systems for transferring fuel from the fuel tank in to combustion chamber. The system used to perform this function is called as the intake system. The exhaust gases produced from the combustion of fuel inside the combustion chamber are sent out of the engine by another system called as the exhaust system.

6.1 EFFECTS OF POLLUTANTS

The exhaust emissions released from the engine combustion chamber are toxic to the human beings and highly pollute the environment. Hence it is advisable to produce less emission from the engines. It can be achieved by burning the fuels completely in the engine combustion chamber. By controlling the pollutants from the automotive engines, the environment can be maintained as clean and all the human beings, animals and all the plants can live peacefully without any diseases. The following are the important pollutant emissions coming out from the internal combustion engines.

1. Carbon Monoxide
2. Nitric Oxide
3. Hydro Carbon
4. Smoke
5. Particulate (solid, liquid pollution)
6. Sulfur Dioxide and etc.,

The following picture and table present the effects of the above pollutants on human beings

In order to reduce the formation of the above hazardous pollutants the fuel must be burnt completely inside the

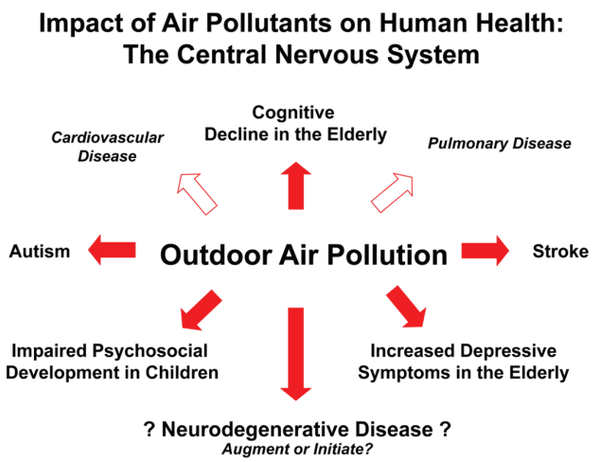

Figure 6.1

AM_Unit_06.indd 116 31-01-2019 17:49:21

Table 6.1 Effects of pollutants

Pollutants	Effects
1. Carbon monoxide	Reduces the oxidation in the blood. It affects the nerves, the heart and the eyes.
2. Nitric oxide	Affects human's cells and blood flow.
3. Hydro carbon	It affects the human eyes.
4. smoke	It affects the human eyes.
5. Particulate matter (solid, liquid pollution)	It leads to cancer, bronchitis and allergy like diseases by inhaling.
6. Sulfur dioxide	It affects human beings and plants.

engine itself in the vehicle. The way of supplying the fuel and air inside the engine combustion chamber plays an important role in achieving complete combustion. The system used for supplying appropriate air and fuel at the appropriate timing inside the combustion chamber of the engine is called as the "intake system". The important components of the engine intake system are

1. Fuel Tank
2. Fuel Filter (Petrol & Diesel)
3. Air Filter
4. Fuel Pump (Petrol and Diesel)
5. Feeding Pump
6. Inlet Manifold
7. Carburettor
8. Injector
9. Nozzle
10. Combustion chamber.

6.2. FUEL TANK

The fuel tank is used to store the fuel needed to produce output energy in the vehicle. It is made of Galvanized Iron by pressing process. This fuel tank varies depending on the cubic capacity of the vehicle. Similarly, the location of this tank in the vehicle will vary depends on the type of vehicle. A separate tank will be generally mounted on the top of the vehicle chassis frame according to the fuel filling system. The fuel tank is shown in Figure 6.2.



Figure 6.2 Fuel Tank

6.3. FUEL FILTER

There is a possibility of having fuel contaminated with dust particles while filling the fuel or during storage. If the contaminated fuel is supplied to the chamber, it leads to incomplete combustion

AM_Unit_06.indd 117 31-01-2019 17:49:21



Figure 6.3 Fuel filter



Figure 6.4 Air filter

and creates problem in reciprocating movement of the piston up and down. The incomplete combustion causes formation of pollutants in the exhaust. Hence fuel filter is used in path way of the fuel supply line to avoid the above said problems. It removes the dust particles and sends the purified fuel to the fuel injector and to the combustion chamber. Figure 6.3 shows the Fuel Filter

6.4. AIR FILTER

In any diesel or petrol engine for achieving combustion of the fuel sufficient amount of oxygen or pure air is required. Hence before sending the atmospheric air into the carburettor in petrol engines or directly into the combustion chamber in diesel engines, the air must be purified. In automobiles there are number of designs in air filters based on the engine used. If it is a gasoline engine air filter is mounted at the carburettor inlet, where as the filter is fitted at the intake manifold in diesel engine. There are different types air filters used in vehicles. Figure 6.4 shows the Air Filter. They are

1. Dry Type Air Cleaner (filter)
2. Oil bath type Air Cleaner (filter)
3. Oil coated air filter (Oil wetted type air cleaner)

Air filters applications (Uses of Air cleaner)

Though there are many usages of the air filters in many different applications, the important usages of the air filter in automobile are,

1. To send clean air without dust and contaminates to the carburettor.
2. To avoid mal-functioning of the engine and prevent damages of the engine parts due to incomplete combustion
3. To reduce the pressure difference occurs in the intake manifold and lowers the noise level. Figure 6.4 shows the Air Filter

6.4.1 Dry Type Air Cleaner

In this type of air filters, the cover, filtering part and bottle housing are coupled with each other. When the air is inducted to the filter through the filter cover, the dust particles and contaminations in the air are removed. Then purified air passes

AM_Unit_06.indd 118 31-01-2019 17:49:21

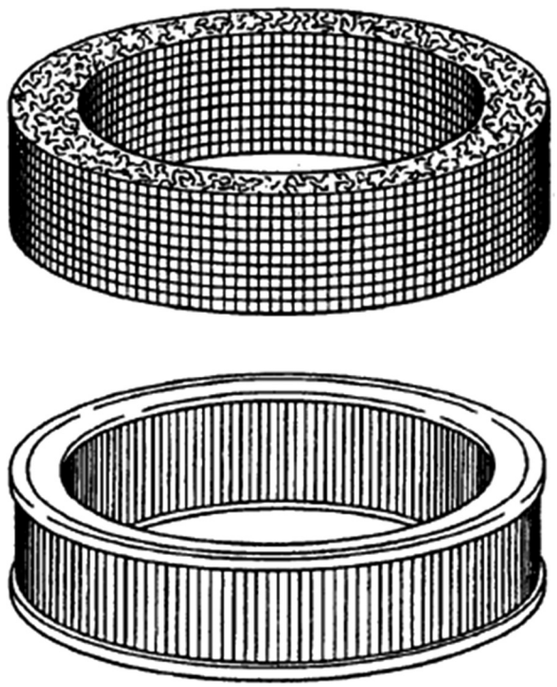

Figure 6.4.1 Dry Type Air Cleaner

to the upper section of the carburettor through the filter outlet in the intake air path and enters into the carburettor. In this type of filters, a number of folded paper elements are used as a filter. Figure 6.4.1 shows the Dry Type Air Cleaner.

6.4.2 Oil Bath Type Air Cleaner

In oil bath type, the air filter is filled with oil in the container such as a tank. This type of filter is made up of copper metal and looks like a spider net in ring shape. It is enclosed in the middle of the tank filled with oil and the upper cover kept in closed position. Due to the reciprocating downward movement of piston the air is sucked in to the engine through the intake manifold where the air filter is fixed. The air is initially passed through the oil present in the filter tank, where surface of the oil absorbs larger size dust particles in it. After that the smaller size dust particles in the air are removed

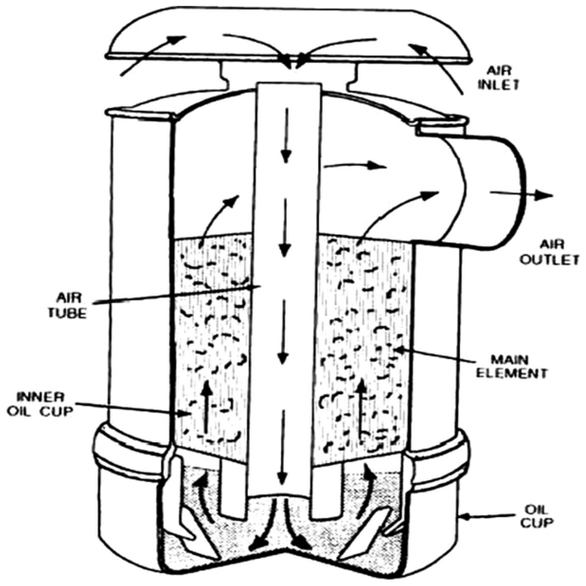

Figure 6.4.2 Oil Bath Type Air Cleaner

by the filter. The filtration components and oil container are fitted separately in this type of filters. Figure 6.4.2 shows the Oil Bath Type Air Cleaner.

6.4.3 Oil Wetted Type Air Cleaner

In this type of filter, the filter is not dipped in the oil in the tank. Instead, the surface of the filter will be coated with oil. The air passing through the filter initially touches the oil on the filter and removes larger size dust particles and impurities. After that the air is passed into the net shaped filter and the air gets purified again and the cleaned air is sent to the engine. Generally, in automobiles after running for 8000 kilometers the filter is

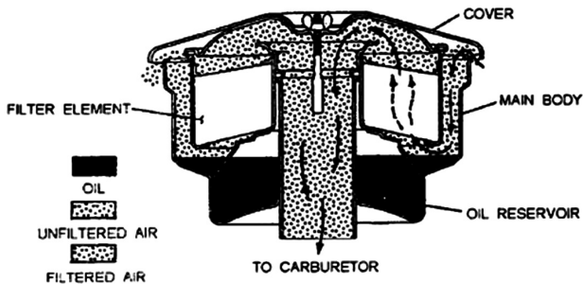

Figure 6.4.3 Oil Wetted Type Air Cleaner

AM_Unit_06.indd 119 31-01-2019 17:49:22

cleaned with petrol or paraffin and can be reused. Figure 6.4.3 shows the Oil Wetted Type Air Cleaner.

6.5. FUEL PUMP

The required amount of fuel (for producing power) pumped from the fuel tank to the combustion chamber is transferred by the device called fuel pump.

It is classified according to the fuel used as,

1. Fuel Pump (Petrol Engine)
2. Fuel diesel pump (diesel engine)

6.5.1 Petrol Fuel Pumps

A fuel pump is used to transfer the fuel from the fuel tank through the filter with appropriate pressure to the float chamber of the carburettor in gasoline engines to drive the vehicle. Petrol Fuel pumps are classified in two types as

1. A.C. Mechanical Fuel Pump
2. S.U. Electric Fuel Pump



Fig 6.5.1(a) A.C. Mechanical Fuel Pump



Fig 6.5.1(b) S.U. Electric Fuel Pump

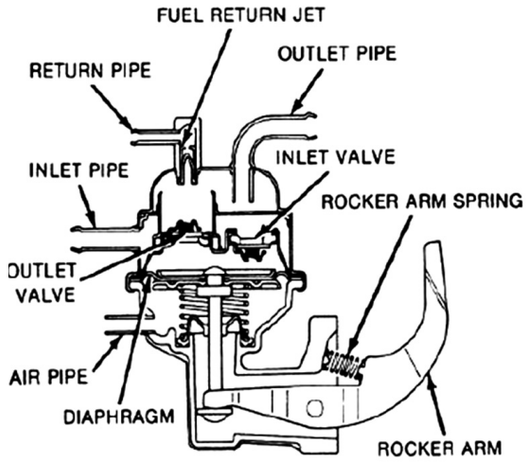

Figure 6.5.1 (a) Schematic of A.C. Mechanical Fuel Pump.

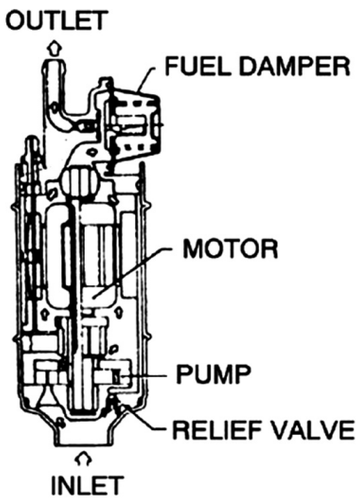

Figure 6.5.1 (b) S.U. Electrical Fuel Pump.

6.5.2 Diesel Fuel Injection Pump

Unlike in petrol engines, in diesel engines diesel stored in the fuel tank is sucked by the Diesel fuel injection pump. The fuel from the fuel tank is passed through the fuel filter and feed to the fuel injection pump. The fuel injection pump develops high pressure and the pressurized fuel is sent to the fuel injector and sprayed into the engine's combustion chamber. This fuel injection pump is classified into two types. They are,

AM_Unit_06.indd 120 31-01-2019 17:49:22

a) Inline Pump

b) Distributer Pump

6.6 FEED PUMP

Feed pump is another pump arrangement located between the diesel fuel tank and the filter in the diesel **Fuel Injection Pump** (FIP) block. The drive for the fuel feed pump is given from the camshaft of the fuel injection pump by cam or eccentric. The fuel feed pump is designed to operate manually by hand for purging the air in the fuel line when air bubbles are present. This fuel feed pump is classified into two types based on the delivery of fuel continuously or intermittent while the fuel injection pump is running. They are

1. Single acting pump
2. Double acting pump

6.6.1 Single Acting Pump

Construction

This type of pump is mounted on the body of the fuel injection pump. This single acting pump is driven by the cam or eccentric of the fuel injection pump's cam shaft. The components such as roller tapper, pressure spindle and plunger are in contact with each other and placed inside the pump body. For emergency purpose, hand priming device is used to increase the pressure of fuel. Figure 6.6.1 shows the Single Acting Pump.

Working Principle

When the engine is started the drive is received from the engine's crank shaft and given to the FIP cam shaft through timing gears. Now the cam shaft of the FIP rotates and while rotating the roller tappet the feed pump is actuated by the cam or eccentric in the cam shaft. Hence the plunger is actuated by the action of the roller tappet. Pressure spindle is now actuated by the plunger. Therefore, the fuel in the pressure chamber is pressurized and sent to the FIP. At the same time the high-pressure fuel developed in the FIP is sent to the nozzle (injector) by the FIP. The quantity of fuel delivered is equal to swept volume or equal to stroke length. The delivery passage is closed by the pressure spindle with the spring force. This is the way how the single acting pump works.

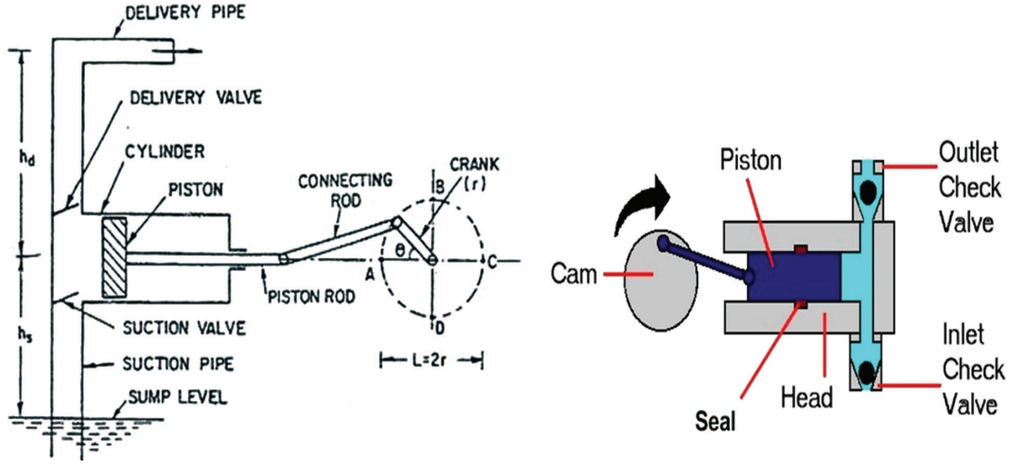

Figure 6.6.1 Single Acting Pump

AM_Unit_06.indd 121 31-01-2019 17:49:22

6.6.2 Double Acting Pump

Construction

This type of pump is similar to the single acting pump in its construction. However, it differs from the single acting pump that the plunger in the pump is operated in such a way to achieve the suction and delivery of fuel at the same time. Figure 6.6.2 shows the Double Acting Pump.

Working Principle

When the drive is received from the engine cam shaft, the cam shaft of the FIP starts rotating and actuates the roller tappet of the fuel pump. Hence the plunger moves downward and presses the pressure spring. Now the pressure valve and suction valve are opened at the same time. And the fuel suction and delivery are achieved at the same time. For each and every rotation of FIP camshaft, the pressurized fuel delivery and suction process are done simultaneously. Since the two actions are done at the same time, this pump is called as the double acting pump.

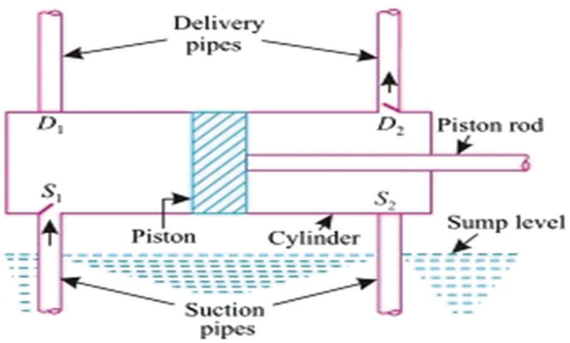

Figure 6.6.2 Double Acting Pump

6.7 Inlet Manifold

Inlet manifold is a pipe which is made up of cast iron or aluminium metal. It is used to send the air fuel mixture from the carburettor to the engine inlet port in petrol engines and air to the combustion chamber in diesel engines. It is also a place to locate the carburettor in petrol engines. The governor or super charger can't be fitted here. In L-head engine the inlet manifold is situated at the adjacent of cylinder block, and in I- head engine it is situated at the adjacent of cylinder head. In V- shape engine it is situated between the two cylinders. Since the exhaust and coolant supply are placed close to the intake manifold there may be possibilities for the inlet manifold to get heated. Hence a thermostat valve with coolant circulation is provided in modern engines to avoid heating of the intake manifold. Therefore, by using the thermostat valve, the inlet manifold can be cooled. The engine is also heated easily by using the thermostat valve from low temperature. Therefore, engine can be started easily. The inlet manifold of the engine is classified into two types. They are

1. Dual intake manifold
2. Four-barrel intake manifold



Dual Intake Manifold



Four-Barrel Intake Manifold.

Figure 6.7 Dual and Four-Barrel Intake Manifold.

AM_Unit_06.indd 122 31-01-2019 17:49:22

Figure 6.7 shows the Dual Intake Manifold and Four-barrel intake manifold

6.8 CARBURETTORS

Carburettor is a device which is used to atomize the petrol and mix it with the air in the proportion depending upon the speed and torque of the engine. This mixture enters into the engine via inlet manifold with the help of carburettor. The venture in the carburettor is used to mix the fuel with the air to the required proportion. After mixing the air fuel mixture is introduced into the engine cylinder. Figure 6.8 shows the Carburettors

The carburettor is classified into several categories. They are as follows,

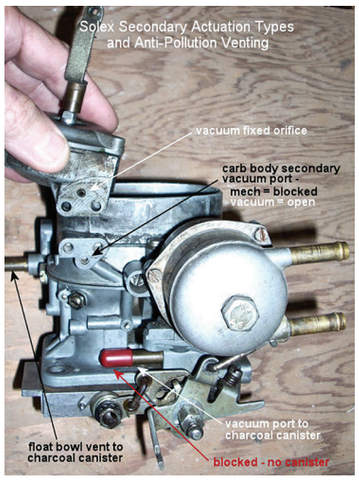

Figure 6.8 Carburattors

1. According to the float chamber
   a) Eccentric
   b) Concentric
2. According to the path of air flow
   a) Down Draft
   b) Side Draft

SPARK PLUG

Albert Champion



During the early 1900s, France was the dominant manufacturer of spark plugs.

Frenchman, Albert Champion was a bicycle and motorcycle racer who immigrated to the United States in 1889 to race. As a sideline, Champion manufactured and sold spark plugs to support himself.

In 1904, Champion moved to Flint, Michigan where he started the Champion Ignition Company for the manufacturing of spark plugs.

He later lost control of his company and in 1908 started the AC Spark Plug Company with backing from Buick Motor Co. AC presumably stood for Albert Champion.

His AC spark plugs were used in aviation, notably for the trans-Atlantic flights of Charles LIndbergh and Amelia Earhart. They also were used in the Apollo rocket stages.



AM_Unit_06.indd 123 31-01-2019 17:49:22

c) Up Draft
d) Semi-Down Draft

3. According to the package
   a) Single Unit
   b) Double Unit
   c) Four-Barrel Unit.
4. According to the Types of Metering System
   a) Air-Bleed jet
   b) Metering Rod Type
5. According to the type of venturi
   a) Plain Venturi
   b) Double Venturi
   c) Vane Venturi
   d) Nozzle-Bar Venturi
   e) Triple Venturi
6. Also, it is classified based on the placement of the carburettor, they are
   a) Simple Carburettor
   b) S.U Carburettor
   c) Solex Carburettor
   d) Zenith Carburettor
   e) Cartor Carburettor

6.9 FUEL INJECTORS

Injector plays an important role in injecting the diesel into the cylinder of the diesel engine. It injects equal amount of the fuel to each cylinder as per the firing order. Injector is used to spray the diesel fuel into the cylinder in the form of very fine particles in the range of 20 to 100 micrometers. Due to this, the diesel fuel is completely mixed with the air. This leads to complete combustion. Figure 6.9 shows the Fuel Injector.

The diesel fuel injectors have the following components,

1. Nozzle body
2. Cap unit
3. Delivery unit

Nozzle body consists of nozzle valve; spindle, springs, adjusting nut are placed together. A passage is made on the injector to pass the high-pressure fuel to inject into the combustion chamber and the bypass unit

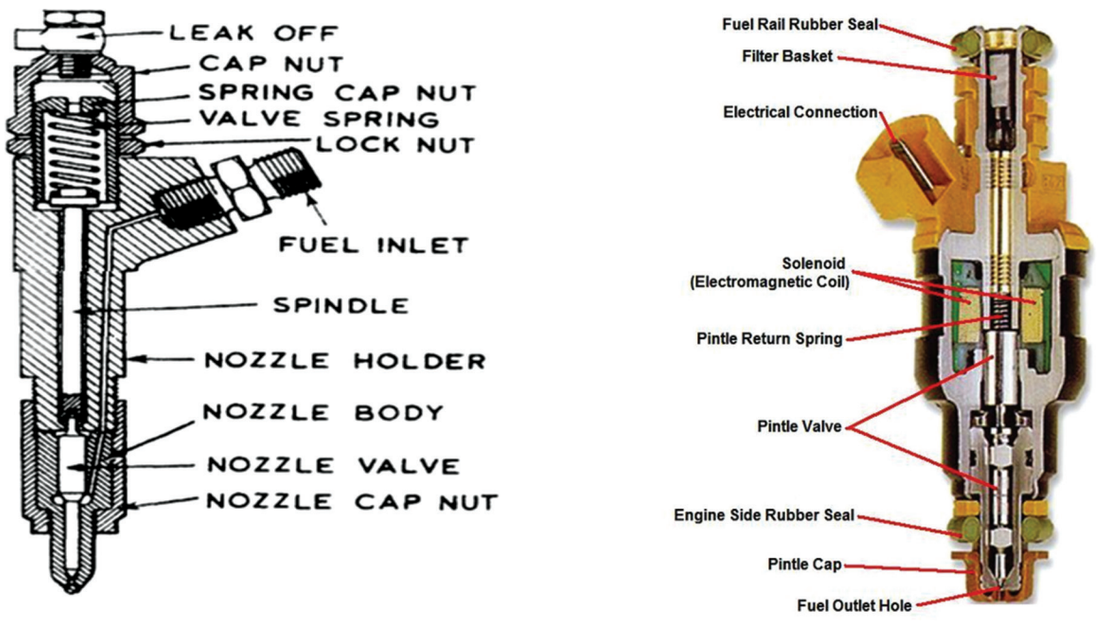

Figure 6.9 Fuel Injector

AM_Unit_06.indd 124 31-01-2019 17:49:23

is used to let the fuel to go back to the fuel tank. Figure 6.9 shows the Fuel Injector.

Working Principle of Injectors

By the rotation of engine crankshaft, the camshaft rotates by using the timing gear connected with it. Hence the camshaft connected to the fuel injection pump also rotates and high pressure is developed in the fuel injection pump. The pressurized fuel the fuel tank is supplied to the fuel injector through the high-pressure fuel line. The diesel fuel entering the injector reaches the nozzle and starts to spray with the help of spring force acting inside the nozzle. Diesel fuel enters into the nozzle at very high pressure opens the nozzle valve by lifting against spring force acting inside the spindle. Hence the nozzle valve opens and high-pressure diesel fuel in the nozzle is injected into the chamber generally at the pressure of 200 bars in the form of very fine droplets. The droplets of the diesel fuel then vaporize and mix with the air inside the combustion chamber to attain proper mixture for burning. When the injection process is over the pressure getting reduced in the spring inside the nozzle, hence the spindle moves the nozzle valve downward. Hence the nozzle valve gets closed. In this way the diesel fuel injector works.

6.10 NOZZLE

Nozzle is the important component used for injecting the diesel at very high pressure at correct timing for the maximum power output of the engine. It is a part of injector which is placed at the cylinder head and has contact with combustion chamber in order to inject the fuel. It helps in injecting the fuel as per the requirements

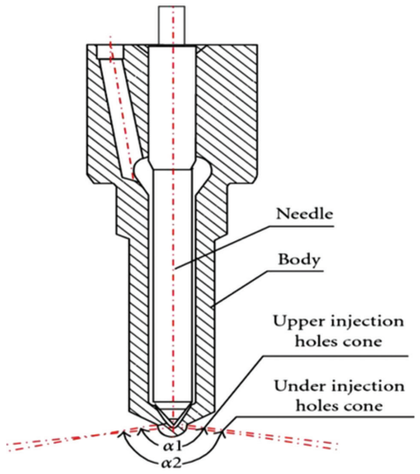

Figure 6.10 Nozzle

of the engine at different pressures and at constant temperature with accurate metering. Nozzle is designed to fit in to the nozzle valve and it can be assembled only by the authorized company. A hole for supplying fuel is available at the tip of nozzle valve. The diesel entering into the injector at high pressure is used for opening the valve and the returning action is taken by springs provided in the valve. Figure 6.10 shows the Nozzle.

There are different types of nozzles,

1. Single Hole Nozzle
2. Multi Hole Nozzle
3. Long Stem Nozzle

6.10.1 Single Hole Nozzle

It has a single hole at the tip for injecting a fuel. The nozzle has a cone shaped spindle which is used for opening and closing the nozzle hole. Figure 6.10.1 shows the Single Whole nozzle.

6.10.2 Multi Hole Nozzle

It has a multi holes for injecting the fuel depending upon the engine

AM_Unit_06.indd 125 31-01-2019 17:49:23

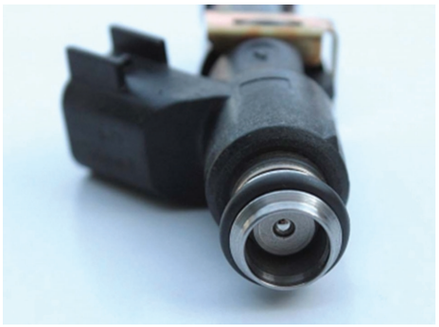

Figure 6.10.1 Single Whole Nozzle



Figure 6.10.2 Multi Whole Nozzle

requirements. Figure 6.10.2 shows the Multi Whole nozzle.

6.10.3 Long Stem Nozzle

The long stem nozzle is mainly used for the direct injection into combustion chambers.

Small Stem Nozzles are commonly not used for these types (direct injection) of engines. Figure 6.10.3 shows the Long Stem Nozzle.

Some of the long stem nozzles are,

a. Pintle Nozzle
b. Pintaux Nozzle
c. Delay Nozzle

a) Pintle Nozzle:

This type of nozzle injects the fuel which is in the form of pencil's cone edge. It is mainly used in the swirl type of combustion chamber, air cell chamber

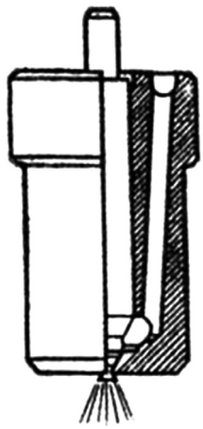

Figure 6.10.3(a) Pintle Nozzle

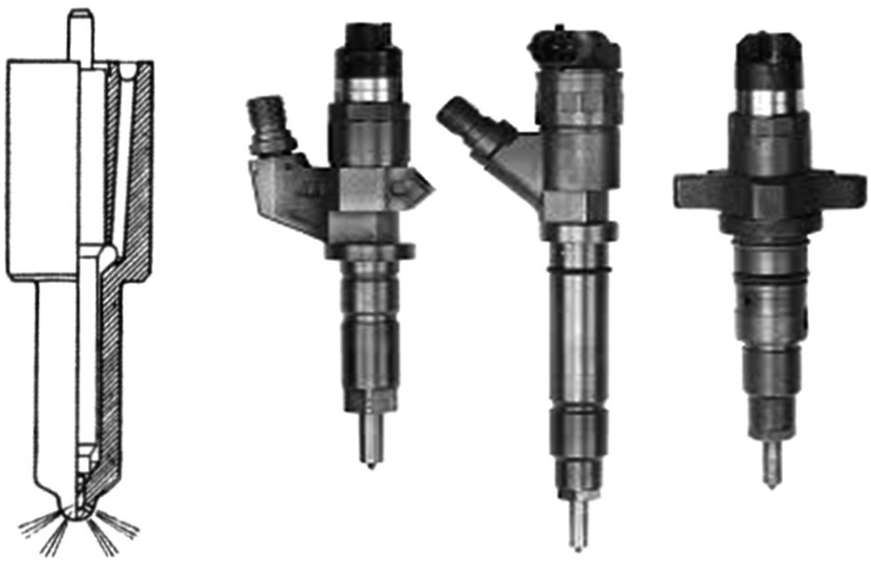

Figure 6.10.3 Long Stem Nozzle

AM_Unit_06.indd 126 31-01-2019 17:49:23

and Pre-combustion chamber engines. Figure 6.10.3(a) shows the Pintle Nozzle.

b) Pintaux Nozzle:

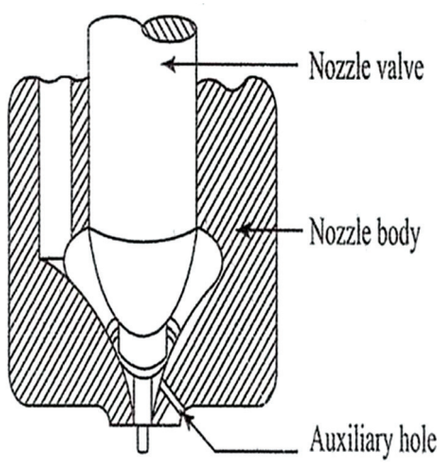

Figure 6.10.3(b) Pintaux Nozzle

This type of nozzle is advancement in the pintle nozzle type. This type of nozzle has the tip projected outside and has a hole in the centre for injecting the fuel. This type of nozzle can achieve combustion even in cold starting condition of engine. Figure 6.10.3(b) shows the Pintaux Nozzle

c) Delay Nozzle:

It is the further advancement in pintle type nozzle in which the fuel injection and the amount of fuel injected into the combustion chamber are controlled depending on engine speed. This type of nozzle is called as delay nozzle.

6.11 COMBUSTION CHAMBERS

The combustion chamber is the place where the air fuel mixture is burnt. It is the space covered by the cylinder head, cylinder wall and piston top. Above the piston there are inlet and exhaust valves and a spark plug present in the cylinder head. Depending on the position of the valves, spark plug and the combustion chamber the engines can be classified as

- L – Head engine
- I – Head engine
- F – Head engine
- T – Head engine
- Spherical shape

L – Head Engine

This type of engine is used for slow and high speed applications. In this type of engines the inlet and exhaust valves are placed in the cylinder block itself and the valves open the intake and exhaust ports by moving upward motion. The spark plug is fitted at the top of the engine cylinder head. Figure 6.11(a) shows the 'L' Head Engine.

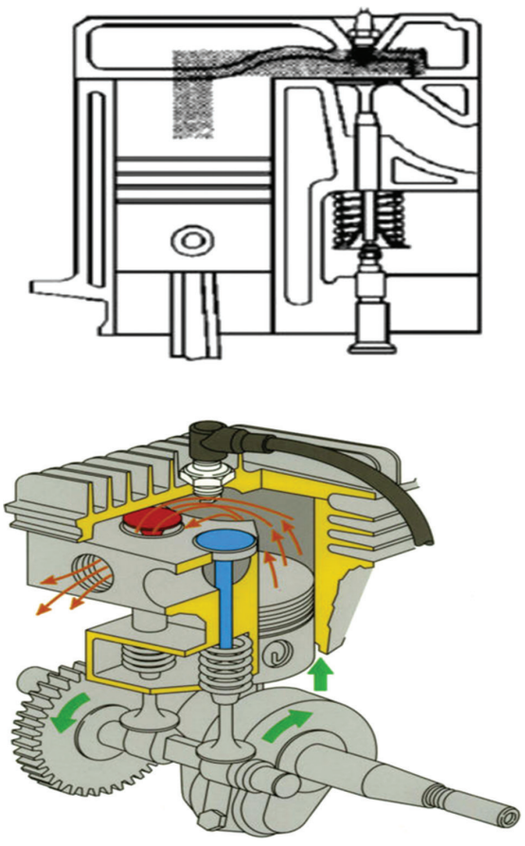

Figure 6.11(a) L – Head Engine

AM_Unit_06.indd 127 31-01-2019 17:49:23

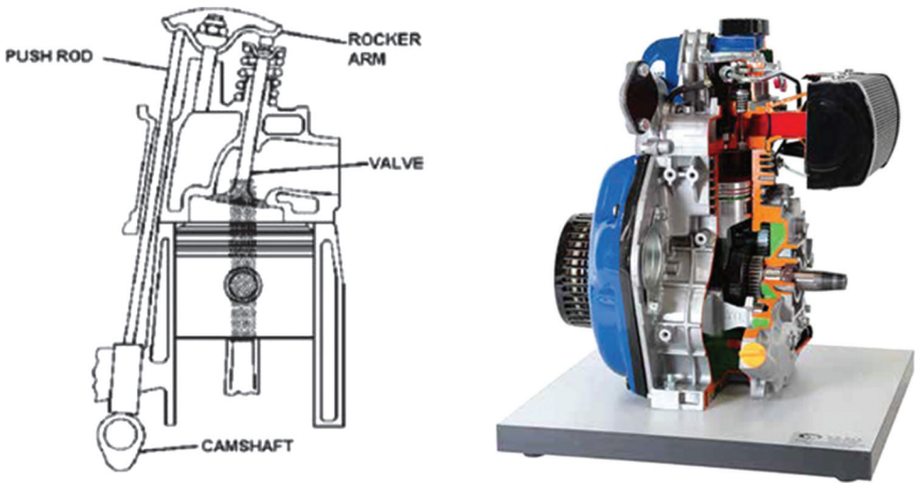

Figure 6.11(b): I– Head Engine

I– Head engine

This type of engine is used in high speed vehicle and racing vehicle. The inlet and exhaust valves replaced in the cylinder head and the spark plug is fitted at the side of cylinder head. Figure 6.11(b) shows the 'I' Head Engine.

F– Head engine

In this engine the combustion chamber is designed in stretched manner at the side way of the engine. The inlet valve is fitted on the upper side of cylinder head which moves in downward motion and exhaust valve is fitted in lower side of cylinder head which moves in upward direction and the spark plug is in the side of cylinder head. Figure 6.11(c) shows the 'F' Head Engine.

T– Head engine

It is designed in stretched manner in both lateral sides, the inlet and exhaust valves are fitted at the lower side of cylinder

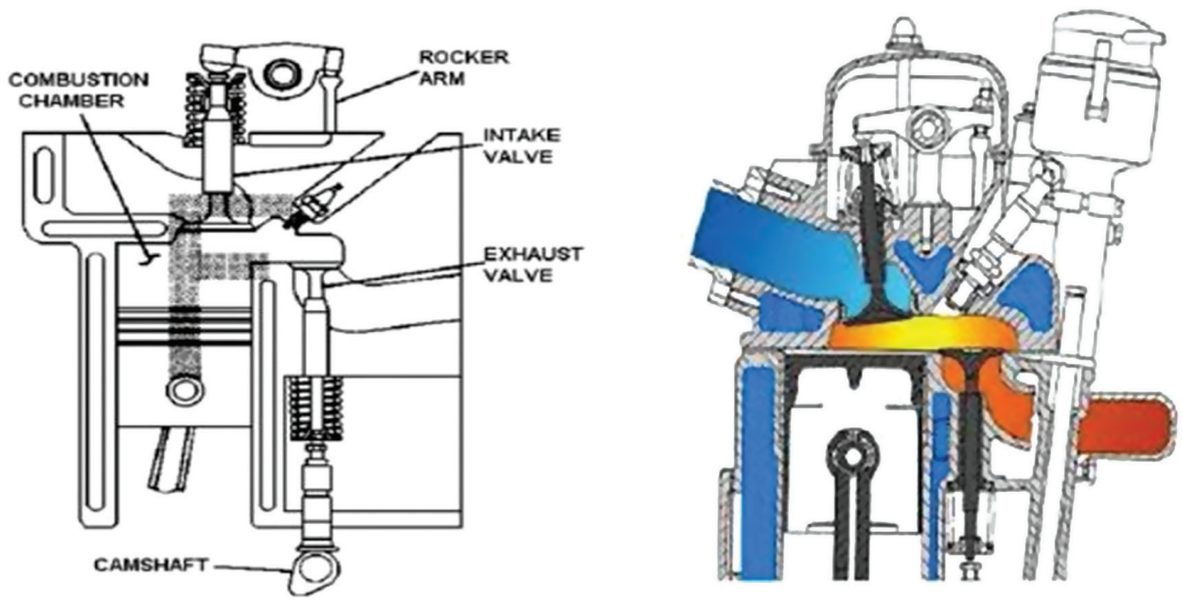

Figure 6.11(c): F – Head Engine

AM_Unit_06.indd 128 31-01-2019 17:49:23

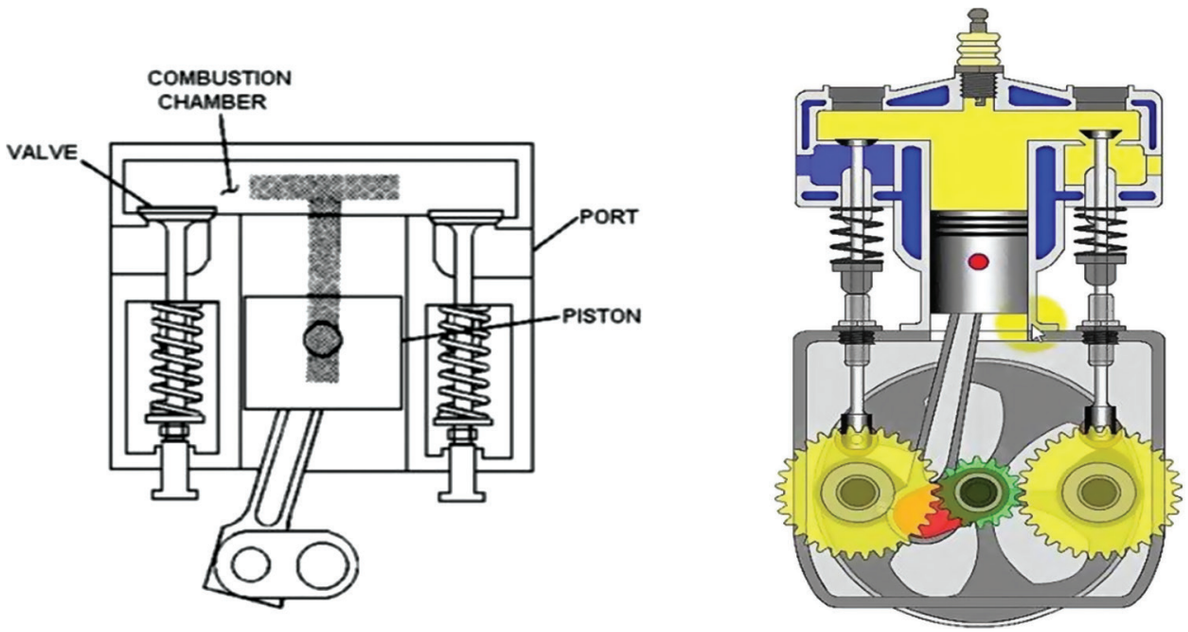

Figure 6.11(d): T – Head Engine

head in which the valves move in upward direction and the spark plug is fitted at the top of cylinder head. Figure 6.11(d) shows the 'T' Head Engine.

Spherical shape

In engine's combustion chamber, if the cylinder head or the piston top has internally or externally a spherical shape then the combustion chamber can be called as spherical combustion chamber. The inlet and exhaust valves are fitted at the opposite direction and the spark plug is fitted either centre or at lateral sides in such engines.

6.11.1 Types of combustion chambers of diesel engines

Due to high power output of diesel engines, the combustion chambers are designed in different types depending on the engines torque and speed requirements. The diesel engine combustion chambers are mainly of the following,

a. Open Combustion chamber
b. Pre-Combustion chamber
c. Swirl Combustion chamber
d. Squish Combustion chamber
e. Air cell and energy cell

(a) Open Combustion chamber

This type of combustion is mainly used in slow and high-speed engines. The piston head is designed in such a way to have a (semi spherical) bowl shape and the injector of the engine is mounted on the cylinder head. Figure 6.11.1(a) shows the Open Combustion Chamber.

(b) Pre-Combustion chamber

It is mainly used in high speed engines. It consists of two chambers such as auxiliary (or pre) combustion chamber and other called as the main combustion chamber. The auxiliary combustion chamber is small and is used for igniting the small amount of the air fuel mixture.

AM_Unit_06.indd 129 31-01-2019 17:49:23

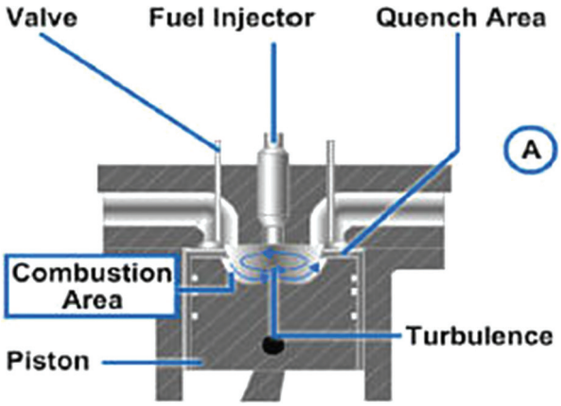

Figure 6.11.1(a) Open Combustion Chamber

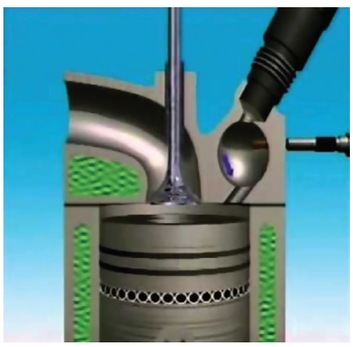

Figure 6.11.1(b) Pre-Combustion Chamber

The mixture first starts ignited in the auxiliary chamber and the combustion flame travels towards the main combustion chamber for the burning the rest of the air fuel mixture. Normally Glow plug is used to initiate combustion of the mixture. The glow plug will be located at the auxiliary chamber. Figure 6.11.1(b) shows the Pre-Combustion Chamber.

(c) Swirl Combustion chamber

It is also known as the turbulent chamber. The air enters into the combustion chamber in swirl motion in which the fuel is injected on the swirl air motion, allowed to mix with the air and achieves

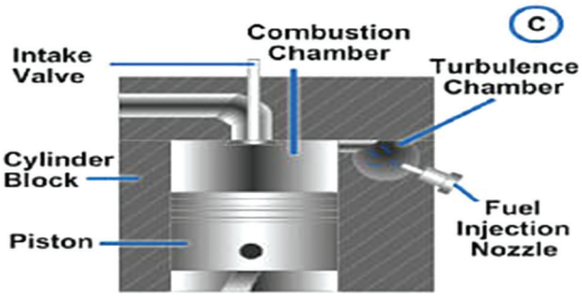

Figure 6.11.1(c) Swirl Combustion Chamber

combustion. Figure 6.11.1(c) shows the Swirl Combustion Chamber.

(d) Squish Combustion chamber

The piston head has the bowl shape in which the air motion is travelled from the side to centre of chamber. The radically inward movement of the air is called as squish. As the piston moves from BDC to TDC, the squish motion is created and the fuel is injected and ignited. Figure 6.11.1(d) shows the Squish Combustion Chamber.

(e) Air cell and energy cell

Air cell

The Air cell design has two (called as air cell and main) chambers in which they

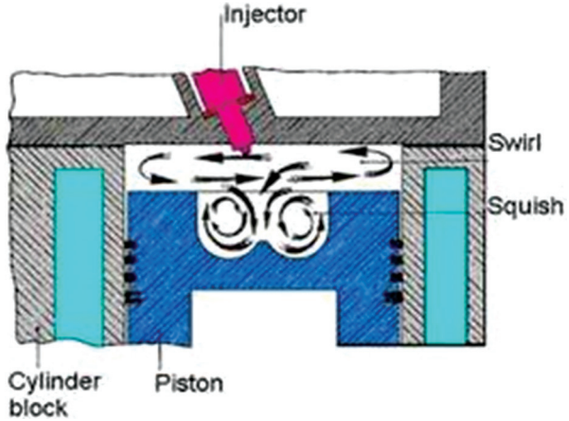

Figure 6.11.1(d) Squish Combustion chamber

AM_Unit_06.indd 130 31-01-2019 17:49:23

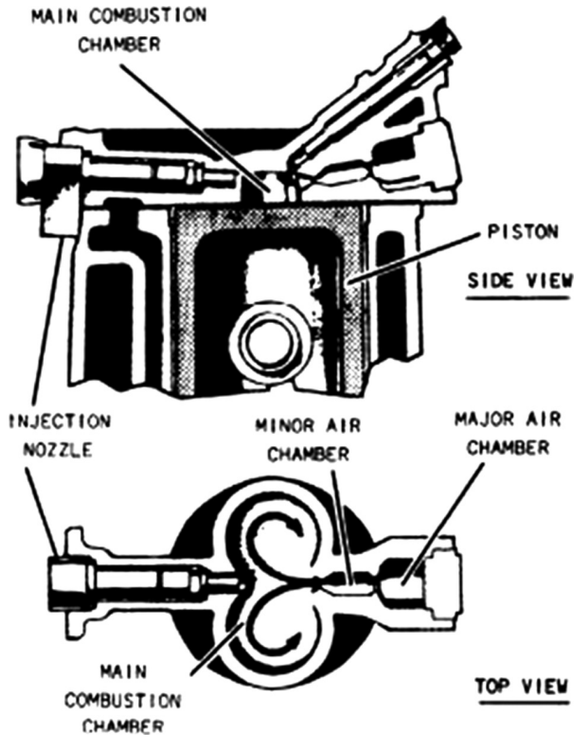

Figure 6.11.1(e) Air Cell and Energy Cell

are connected together by a narrow passage. Due to this arrangement the pressure of the inlet air increases in the air cell chamber and the pressurized air enters into the main chamber in which the fuel is injected and combustion is achieved. Figure 6.11.1(e) shows the Air Cell and Energy Cell.

Energy cell

It is also known as Lenovo combustion chamber. It combines the Air cell and Pre combustion chamber modes. In this type of chamber the energy cell is connected via the narrow passage with main chamber. When the engine runs, the pressure of the air in the energy cell is increased due to the narrow path and fuel is also injected in the similar way as pre chamber. The combustion at the energy cell is continued in the main chamber where the main combustion takes place. By this way the energy is utilized by injecting fuel in the energy cell. Due to piston movement from TDC to BDC and depending on pressure difference between the chambers the mixture is combusted completely.

6.12 EXHAUST SYSTEM

In an engine the products of combustion (pollutants) formed during the combustion process must be taken out of the engine. This system is called as the exhaust system. This system includes exhaust port, exhaust manifold, exhaust pipe, muffler and a catalytic converter.

6.12.1 Exhaust manifold

Exhaust manifold is a part of the exhaust system that is used for removing unwanted gases such as carbon monoxide, carbon dioxide, smoke, unburned hydrocarbon etc., which are formed during the combustion process. Through the exhaust port of the engine the exhaust products are passed to the exhaust manifold. The unwanted gases coming out from the all cylinders in the engine are collected in the exhaust manifold and sent to the exhaust pipe called as tail pipe. This is the main purpose of the exhaust manifold present in the engine. Exhaust manifold is generally made up of cast iron. Figure 6.12.1 shows the Exhaust Manifold.

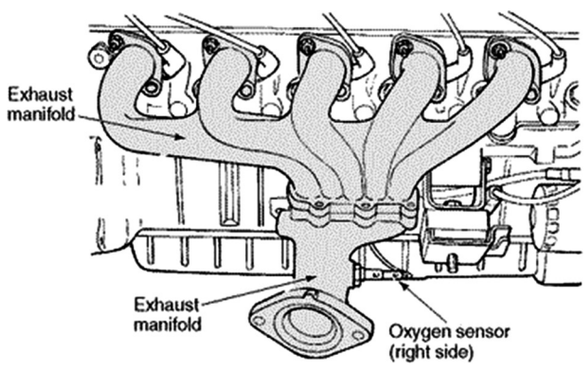

Figure 6.12.1 Exhaust Manifold

AM_Unit_06.indd 131 31-01-2019 17:49:24

6.12.2 Exhaust Pipe

Exhaust pipe is the one which connects exhaust manifold and muffler. It is around 5cm in radius and 1cm in thickness generally. The exhaust pipe arrests the vibrations to the muffler which is coming from the engine.

6.12.3 Exhaust Mufflers

The exhaust mufflers are used to send heat, gas and sound without any destruction. To do these the mufflers have to perform the following operations.

1. Reduce the temperature of exhaust gas
2. Reduce the speed of the exhaust gas
3. Reduce the sound of the exhaust gas
4. Reduce the strength hot and unburned gas

Different types of mufflers are used to perform the above functions. They are of

a) Baffle type
b) Wave cancellation type
c) Resonance type
d) Absorber type
e) Combined absorber and resonance type

6.12.3(a) Baffle type

This type of mufflers will be in cylindrical shape. This will be divided into many rooms. Hence the exhaust gas speed gets reduced and the energy also gets reduced. Fig 6.12.3(a) shows the baffle type muffler.

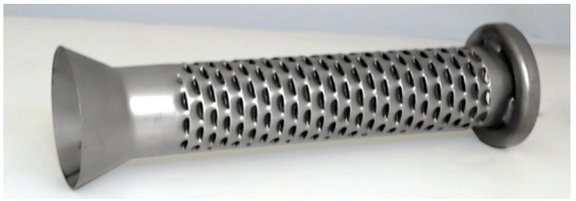

Figure 6.12.3(a) Baffle Type Muffler

6.12.3(b) Wave cancellation type

In this type the burnt gases are separated and again combined and expelled out to the atmosphere. In this type the speed of the gas can be reduced but the sound can't be reduced completely. Fig 6.12.3(b) shows the wave cancellation type.

6.12.3(c) Resonance type

In this type of mufflers the serially arranged resonators absorb the sound of the out coming gases. So that the sound as well as heat gets reduced. Fig 6.12.3(c) shows the resonance type.

6.12.3(d) Absorber type

In this type the exhaust pipe is surrounded by special type of materials which could absorb the sound. When the exhaust enters into this muffler the absorber material absorbs the sound. Fig 6.12.3(d) shows the absorber type.

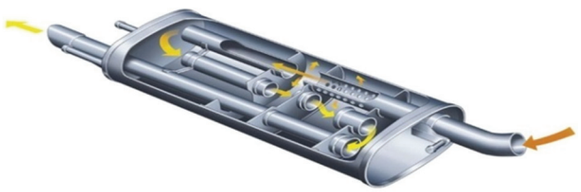

Figure 6.12.3(b) Wave Cancellation Type Muffler

AM_Unit_06.indd 132 31-01-2019 17:49:24

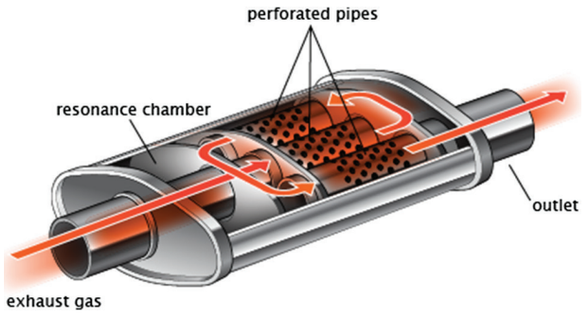

Figure 6.12.3(c) Resonance Type Muffler

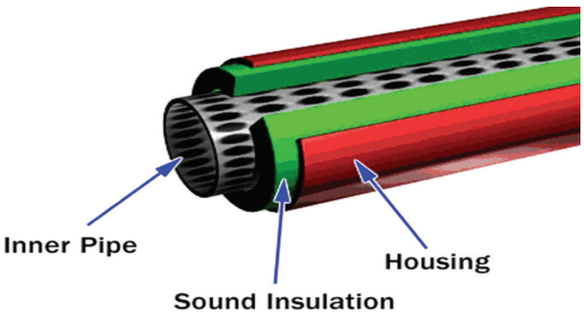

Figure 6.12.3(d) Absorber Type

6.12.3(e) Combined absorber & resonance type

In the combined type mufflers in addition to the absorber material resonators are also fixed on the exhaust path. In this type of mufflers both heat and vibrations are absorbed. Fig 6.12.3(e) shows the Combined absorber & resonance type.

6.13 CATALYTIC CONVERTORS

The exhaust gases coming out from the exhaust manifold are highly toxic to human beings and plants. The catalytic convertor fitted with the exhaust pipe could reduce the harmful emissions such as unburned hydrocarbon, nitrogen oxides and carbon monoxide emissions. In catalytic





Combined resonance and absorber type muffler: 1. Inlet; 2. Noise absorbant; 3. Access port; 4. Outlet; 5. Resonant

Figure 6.12.3(e) Combined Resonence and Absorber Type

convertors platinum, palladium and rhodium chemicals are used as catalysts which are coated in the form of honey comb like structures and being used in vehicles. A secondary passage is also made to supply oxygen into the convertor. When the toxic gases (such as hydrocarbon and carbon monoxide) are passed into the catalytic convertors, they are converted into water and carbon dioxide. Three way catalytic convertors reduce the nitrogen oxides also by the way of reduction action to nitrogen and oxygen. Fig 6.13 shows the catalytic convertor.

6.14 ENGINE TUNE-UP PROCEDURE

Checking the engine components and adjusting the components for better engine's performance is called as engine tuning. Tuning the engine for better performance increases the life of the engine. The flow chart shown in Figure 6.14 presents the engine tuning procedure on various components of the engine.

To improve the engine's performance (efficiency) the following components must be maintained in good condition.

AM_Unit_06.indd 133 31-01-2019 17:49:24

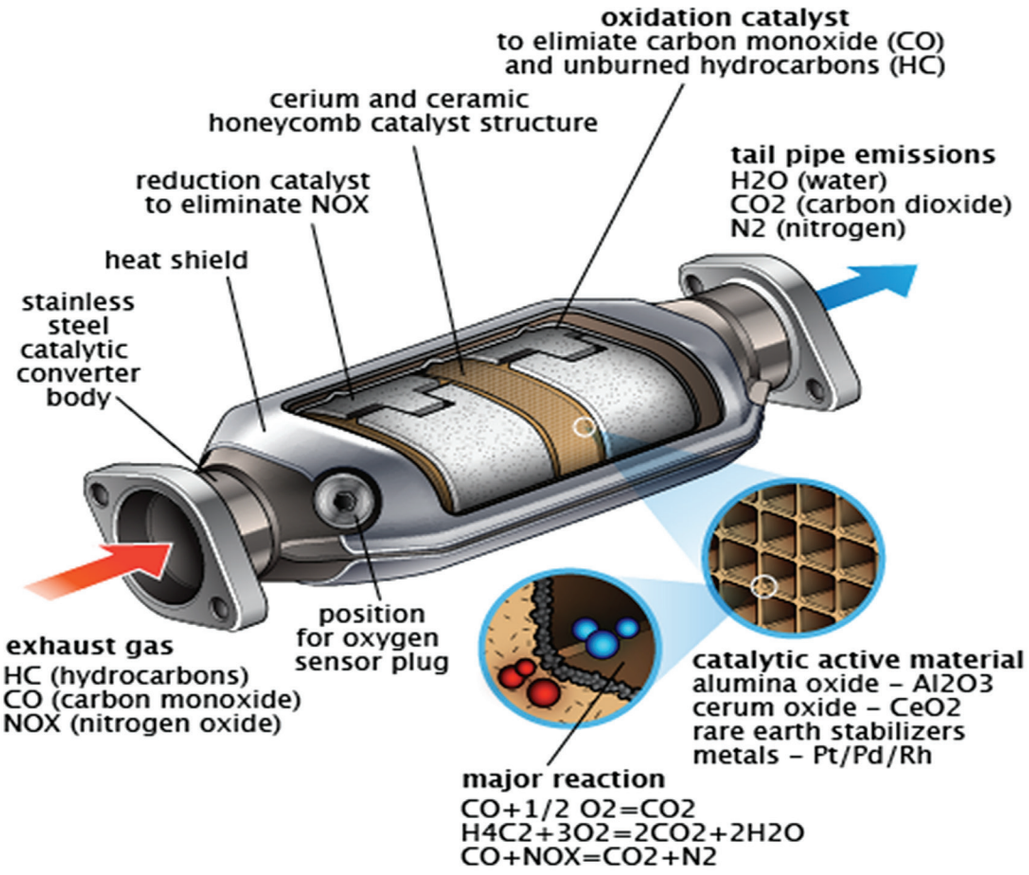

Figure 6.13 Catalytic Convertors

(1) Air inlet and exhaust system

- The Air filter should be cleaned
- The air inlet manifold should be cleaned
- Pre cleaner should be cleaned
- The crank case ventilation should be checked
- Exhaust system and muffler should be tested

(2) Engine testing

- The intake manifold of the system should be tested.
- Should check the air bubbles on the radiator.
- In the cylinder head gasket leakage should be tested
- Cylinder head bolts should be tightened well
- Have to check the valve clearance
- Have to check pressure of all the cylinder

(3) Ignition system testing

- The Spark plug should be cleaned
- Connection to the ignition coil should be tested
- Distributor cap and rotor should be checked
- The Condenser should be tested
- Ignition timing should be adjusted correctly

(4) Fuel system testing

- The leak (or) block in the fuel line should be tested

AM_Unit_06.indd 134 31-01-2019 17:49:24

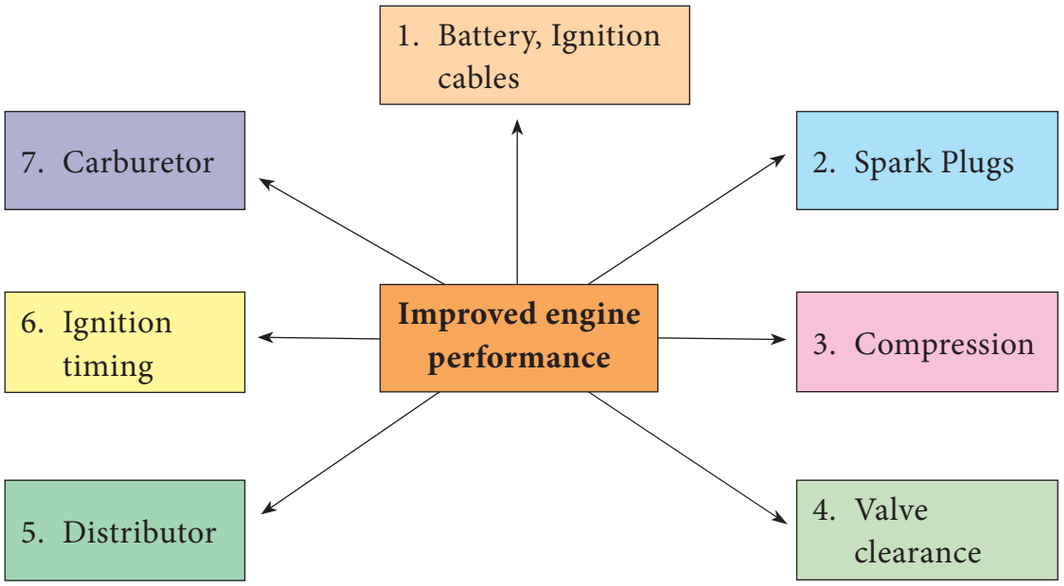

Figure 6.14 Engine tune-up procedure

- The Fuel pump should be cleaned
- The carburettor should be cleaned
- Diesel injection pump should be cleaned well
- Diesel injector should be cleaned well

(5) Lubricating System

- Pressure gas working should be tested
- Oil filter should be cleaned
- Crank case oil level should be tested
- Engine oil pressure should be checked

(6) Cooling unit testing

- Have to check the end play and a leak in the water pump
- Should check the leak in the radiator hose
- Fan belt should be checked

(7) Electrical system testing

- Battery, wire connection should be cleaned
- To test the battery condition, electrolyte test should be performed
- Generator connection should be checked
- Starter switch should be checked

(8) Clutch plate should be checked

(9) With the help of the dynamo the engine performance should be measured

6.15 POLLUTION

In this world, human and many living organisms inhale oxygen from air to survive. So that the air should be clean and make it free from pollution. In doing this we have to know the formation of pollutants and measures to reduce them. Every human inhales nearly 15 kg of oxygen. So if the air is polluted all the living organisms will be affected. Pollutants and its effects are already reffered in Table 6.1.

AM_Unit_06.indd 135 31-01-2019 17:49:24



Pollution Control

To control pollution, the below said three techniques are being used,

a) Reduce pollution before it occurs
b) Reduce the pollutant during their formation stages
c) Reduce pollution once it is formed.

(1) Reduce pollution before it occurs,
- Low compression ratio
- Changing the combustion chamber geometry
- Changing the piston design
- Lean mixture operation
- Maintaining piston and piston ring function

(2) Reduce the pollutant during their formation stages
- Fuel modifications
- Engine modifications
- Modifying the operating parameters for complete combustion

(3) Reduce pollution once it is formed,
- Using burner
- More air supply to inlet manifold

(4) Control of carbon monoxide,
- Lean mixture operation
- After burner
- Catalytic converter

(5) Control of oxides of nitrogen,
- Re inducting the exhaust gas into inlet manifold
- Mixing of non-fired things with fired things

Smoke Control

- To control the smoke we have to maintain the vehicle in good condition and barium salt to the fuel

Various Methods of Reducing Emissions

- Re setting of valve timing
- Inspecting cooling and fuel supply system
- Changing combustion chamber design
- Re inducting the exhaust gas into inlet manifold
- lean mixture operation

Student Activity

1. Students should visit the nearby workshops to study intake and exhuast system of a motorcycle and a car and should have a hands-on experience on engine dismantling and assembling inlet manifold.
2. Students should visit the nearby workshops to dismandle the cylinder head and sketch the components.

AM_Unit_06.indd 136 31-01-2019 17:49:25

Glossary

Purified	-	சுத்தப்படுத்துதல்
Contamination	-	மாசுபடுதல்
Intermittent	-	விட்டு விட்டு
Venturi	-	குறுகிய வழி
Ignition	-	பற்றி எரிதல்
Nozzle	-	நுனிக்குழாய்
Idle Speed	-	நிலையியக்க வேகம்
Inlet Manifold	-	உள்ளிழு பன் மடிமம்
Out let manifold	-	வெளியேந்து பன் மடிமம்
Spark Plug	-	மின்பொறிக்கட்டை

References

1. Rajput R.K. Internal Combustion Engines, Laxmi Publications (P) Ltd, 2006.
2. Ganesan V." Internal Combustion Engines, Third Edition, Tata McGraw - Hill, 2007.
3. B. P. Pundir, "IC Engines Combustion and Emission" Narosa publishing house, 2010.
4. Crouse William, Automotive Emission Control, Gregg Division /McGraw - Hill, 1980
5. Mathur, M.L., and Sharma, R.P., A Course in Internal Combustion Engines, Dhanpat Rai Publications Pvt.New Delhi-2, 1993.

Webliography

1. https://en.wikipedia.org/wiki/Inlet_manifold
2. https://en.wikipedia.org/wiki/Inlet_manifold
3. https://www.doityourself.com/stry/exhaust-manifold-vs-intake-manifold
4. https://sffsymposium.engr.utexas.edu/Manuscripts/2009/2009-67-Ilardo.pdf
5. https://nwmobilemechanicdotcom.wordpress.com/mechanic-research-papers/
6. https://www.magnetimarelli.com/business_areas/powertrain/gasoline-system-pfi/air-intake-manifold
7. https://uta-ir.tdl.org/uta-ir/bitstream/handle/10106/25398/Seshadri_uta_2502M_13339.pdf
8. https://928motorsports.com/installpdf/intakemanifolddesign.pdf

AM_Unit_06.indd 137 31-01-2019 17:49:25

9. http://www.ijettjournal.org/volume-17/number-10/IJETT-V17P295.pdf
10. http://ijesat.org/Volumes/2017_Vol_07_Iss_01/IJESAT_2017_07_01_05.pdf

SAMPLE QUESTIONS

Choose the correct answer

1. How many types of air filters are used in I.C engines?

   a) Two b) Three c) Four

2. How many types of petrol pumps are used in engines?

   a) Two b) Three c) Four

3. How many types of diesel injection pumps are used in engines?

   a) Two b) Three c) Four

4. How many types of feed pumps are used in diesel engines?

   a) Two b) Three c) Four

5. How many types of silencers are used in I.C engines?

   a) Two b) Four c) Five

Answer the following questions

1. What are the pollutions in atmospheric air?
2. What are the effects of air pollution to the human?
3. Give the five parts of intake system?
4. What are the types of Air filters?
5. What are the uses of air filter?
6. What are the uses of oil bath type air cleaner?
7. Draw and explain the construction of A.C mechanical fuel pump?
8. What is carburettor?
9. Write the types of carburettor.
10. Draw and explain the construction diesel injector.
11. Write the types of nozzles.
12. Draw and explain any one nozzle.
13. What are the various types of combustion chambers in diesel engines?
14. What is muffler?
15. Write the types of muffler.
16. Draw and explain any one muffler.
17. What are the methods are used to control the air pollution?
18. Briefly explain about pollution control methods.

AM_Unit_06.indd 138 31-01-2019 17:49:25

Unit 7 Cooling System

Contents

7.0 Aim
7.1 Air Cooling System
7.2 Water Cooling System
  7.2.1 Direct (or) Non-Return System
  7.2.2 Thermosyphon System
  7.2.3 Pump Circulation System
7.3 Parts of the Water Cooling System
  7.3.1 Radiator
    7.3.1(a) Tabular Type Radiator
    7.3.1(b) Cellular (or) Honey Comb Type
7.4 Pressure Cap
7.5 Thermostat
  7.5.1 Bellow Type Thermostat
  7.5.2 Wax Type Thermostat
7.6 Water Pump
7.7 Engine Fan
7.8 Anti-Freezing Solutions
7.9 Maintenance of Cooling System

AM_Unit_07.indd 139 31-01-2019 17:50:46

Learning Objectives

- To learn about the air and water cooling techniques involved in two stroke and four stroke engines.
- To learn about various cooling components like cooling fan, cooling water, radiator and water jacket.

7.0 AIM

In internal combustion engines due to the combustion of the fuel air mixture, enormous heat is liberated inside the combustion chamber. From the total heat released, about 30-35% of the heat is transferred as useful mechanical work at the engine's crank shaft. Approximately 30% of heat is carried out by the burned gases. About 25- 30% of the heat is rejected by the cooling medium and the remaining is considered as the unaccounted loss which is due to the friction, radiation etc., The temperature of the combustion products immediately after the combustion of the fuel reaches the value which is even more than 2000°C. Due to the very high temperature the engine components are subjected to very high thermal stress and get expanded due to the more heat of the products. This leads to the burning of engine lubricating oil and more carbon will get deposited inside the combustion chamber. In order to avoid the damage of engine components and burning of lubricating oil the cooling system is essential which helps in sending the heat to the surroundings.

The following are effects of overheating of the engine components.

- Damage of the piston and piston sticking on the cylinder wall.
- Lubricating oil burning and formation of carbon deposits and on the combustion chamber parts and the valves.
- Burning of the engine valves (mainly the exhaust valve)
- Occurrence of Pre ignition, knocking and detonation
- Reduction in viscosity of the engine lubricating oil
- Wear and tear of the engine components
- More fuel consumption.

The following are effects of over cooling of the engine components.

- Power loss
- More fuel consumption
- Reduced Thermal efficiency
- Increase in viscosity of the engine lubricating oil
- Reduced mechanical efficiency

Characteristics of the efficient cooling system:

- From the overall heat produced, the cooling system must reject sufficient amount of heat about 28-30% from the overall heat produced from combustion of the fuel.
- Cooling system should be designed in such a way that the heat to be rejected quickly when the engine is operated at very high temperature.

AM_Unit_07.indd 140 31-01-2019 17:50:46

- During starting, the cooling system should reject only less amount of heat.
- It should transfer the maximum (i.e. sufficient) amount of heat from the engine combustion chamber.

7.1 AIR COOLING SYSTEM

In this type of cooling system, the engine cylinder should be kept in such a way that more air should be in contact with the outer region of the cylinder block. Cooling fins are provided on the outer wall of the cylinder so that the contact surface areas for heat transfer to be more. These arrangements are mostly seen in all motor cycles, scooters and in small engines. Figure 7.1 shows the air cooling system.

When the vehicle moves forward, the air passes over the fins and removes the heat on the engine components and hence the engine gets cooled. In some large engines, blower arrangement is made so that the blower sucks the air from the surrounding air and blows on the surface of the cooling fins of the engine.

The efficiency of the air cooling system depends on the following characteristics,

- The speed of the air which flows on the fins
- Area of the fins that is in contact with air
- Thermal conductivity of the cylinder walls

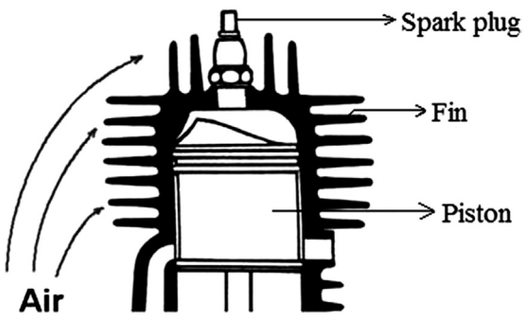

Figure 7.1 Air cooling system

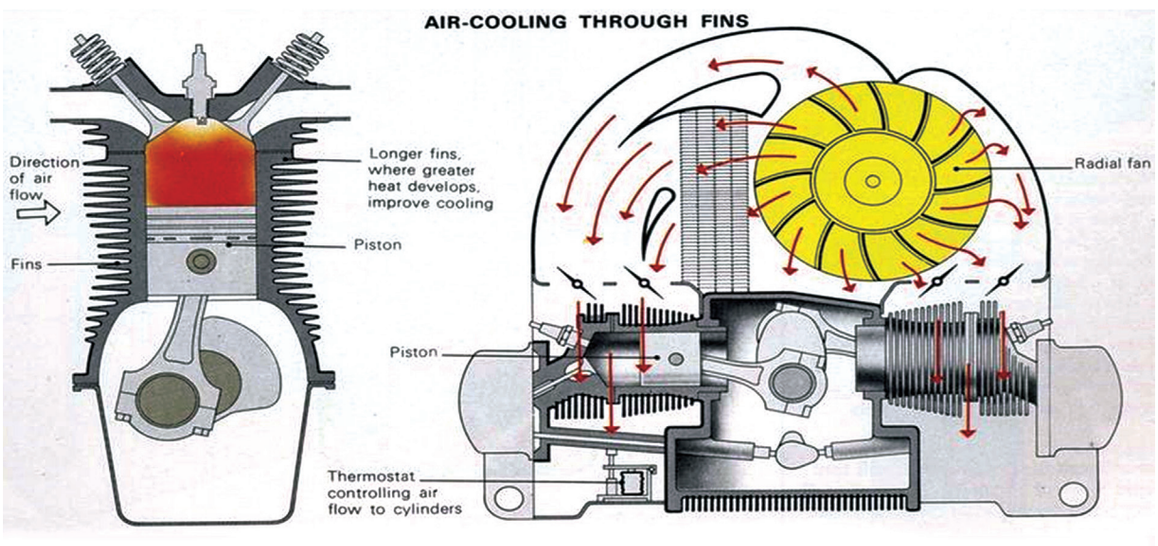

Figure 7.1(a) Air cooling system

AM_Unit_07.indd 141 31-01-2019 17:50:47

- The temperature of the engine fins and the temperature of the cooling air

Advantages and disadvantages of air cooling system:

Advantages:

- In this type due to the absence of radiator fan and pumping unit, engine weight is considerably reduced
- Due to the absence of radiator arrangement, rust and deposits formation are avoided
- Engine occupies only less space
- As the engine needs no water jacket, design of the engine is simple
- The system need no water filling in the radiator
- The engine can be operated at all operating conditions (cold and hot regions)
- Freezing and evaporation of water do not occur as in case of water cooling system

Disadvantages:

- Air cool system is not suitable for CSMO cylinder engines
- As this type of engine is cooled by air, the efficiency of engine decreases
- More noise is produced
- Heat transfer rate is lower with air cooling as compared to water cooling
- Blower arrangement is needed for bigger size engines

7.2 WATER COOLING SYSTEM

In this method, the water is circulated inside the water jackets of the engine cylinder block and the cylinder head and rejects the heat in the cylinder block and head. As the water absorbs the heat from the cylinder it gets vapourized. It may cause insufficient water to be present in the cooling line. Hence excess water must be added to overcome the vapourization loss. In order to overcome this difficulty radiator arrangement is used to cool the hot water coming out from the engine water jackets. There are three types of water cooling systems followed in engines which are,

1. Direct (or) non return cooling system
2. Thermosyphon or natural circulation cooling system

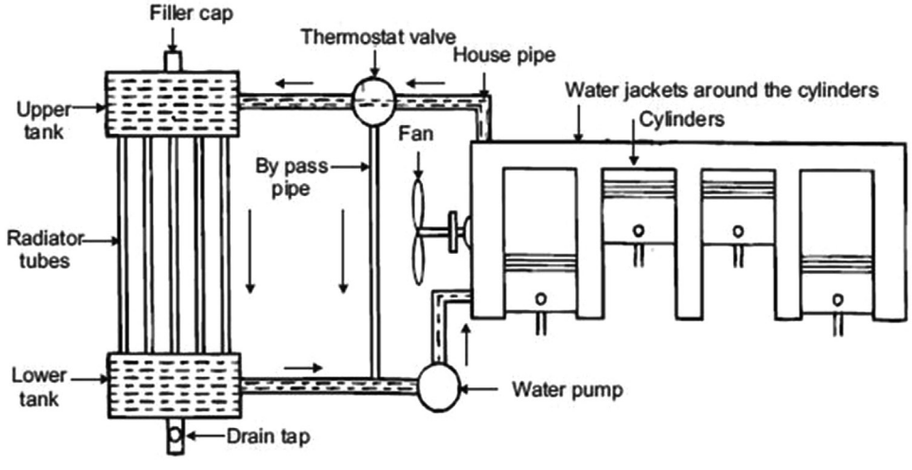

Figure 7.2.1 Water cooling system

AM_Unit_07.indd 142 31-01-2019 17:50:47

3. Pressurized or Pump circulation cooling system

7.2.1 Direct (or) Non-Return System

This method is mostly used where availability of water is more such as in big industrial engines, marine engines etc., In this method the water from the storage tank is sent to the water jackets of the engine where the water absorbs the heat and the hot water is sent out through the outlet path. The pump in the marine engines pumps the sea water into the water jacket and sends the hot water out. This type is not recommended for automotive engines.

7.2.2 Thermosyphon System

We know that the density of hot water is less than that of the cold water. Thermosyphon cooling system works on the principle of circulating water by the density difference in the water. Figure 7.2 shows the thermosyphon system.

In Thermosyphon cooling system, when the engine runs, the hot water in the engine water jacket moves upwards due to the reduction in density. It moves further to the radiator through the hose provided and it is cooled in the radiator. The cold water at the bottom of the radiator enters into the engine and pushes the hot water upwards and occupies the place of the hot

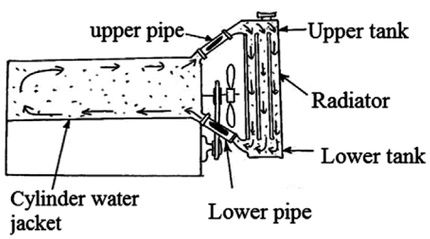

Figure 7.2.2 Thermosyphon system

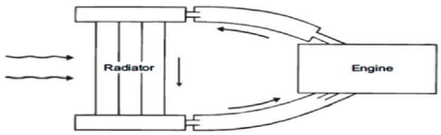

Figure 7.2.2 Thermosyphon system

water. This is called as conventional flow of water. In this type of cooling systems the radiator is placed just above the engine. When the water level is less and when the vehicle claims up or down this system does not work properly. Hence this type of cooling system is not is not used in modern automobiles.

7.2.3 Pump Circulation System

In this system a water pump is used to circulate the water. Hence this method is also called as pump circulation system. Nowadays, in many vehicles this type of cooling system is followed. In this system the conventional flow of water and the pressure of the centrifugal pump are combined and hence the system has the added advantage. Fig 7.2.3 shows the pump circulation cooling system.

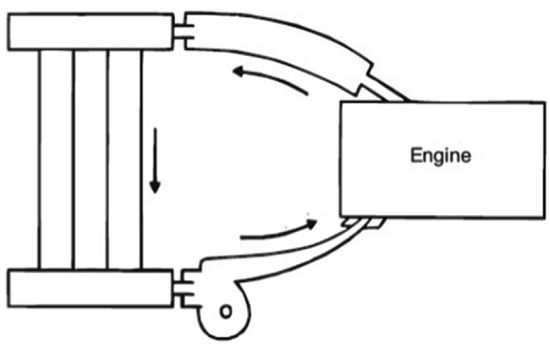

Fig 7.2.3 pump circulation system

AM_Unit_07.indd 143 31-01-2019 17:50:47

The pump present in this system pumps the water into the water Jacket of the engine quickly. The pumped water takes away the heat from the engine cylinder and goes to the radiator. The hot water in the radiator is cooled as it enters into the shells of the radiator and also due to the opposing air coming from the atmosphere. As the air passes through the gaps of the shells,by touching the fins in the radiator the heat is removed from the water. The cooled water is again sent to the engine water jackets by the pump. By this way the pressurised or pump circulation cooling system rejects heat. The power to the water pump is taken from the V-pulley belt drive.

The important components of this system are as follows,

1. Water jacket
2. Water pump
3. Radiator
4. Thermostat valve
5. Fan and fan belt
6. Radiator hose

The following are the Advantages of the water cooling system:

1. The engine noise is reduced and runs smoothly
2. Cooling rate is high
3. The engine can be operated for more time than other type of cooling system engines
4. This is mostly used for multi cylinder engines
5. Temperature is controlled as per the requirement of the engine

Draw backs:

1. Maintenance is difficult
2. Maintenance cost is higher than air cooled engines
3. Water pump, water jacket, radiator and the radiator fan are the components needed.
4. Purified water has to be used.
5. Deposits and corrosion of the engine water jackets are possible when using impure water in this system

7.3 PARTS OF THE WATER COOLING SYSTEM

1. Radiator
2. Pressure cap
3. Thermostat
4. Water pump
5. Fan

7.3.1 Radiator

Radiator consists of three main parts such as upper tank, core and lower tank. The radiator core and connecting tube are placed in between the upper tank and lower tank. In a radiator the upper tank is connected to the upper surface of the engine through a separate hose. The lower tank is connected with the water pump through a separate hose connection.

The hot water coming out from the engine goes to the upper tank of the radiator through the hose connection. The water reaching the lower tank from upper tank of the radiator is cooled by the radiator core. Before reaching the lower tank the water is cooled by the air passing through the fins of the radiator core by the atmospheric air. The atmospheric air is sucked by the radiator fan and hence the hot water is cooled.

AM_Unit_07.indd 144 31-01-2019 17:50:47

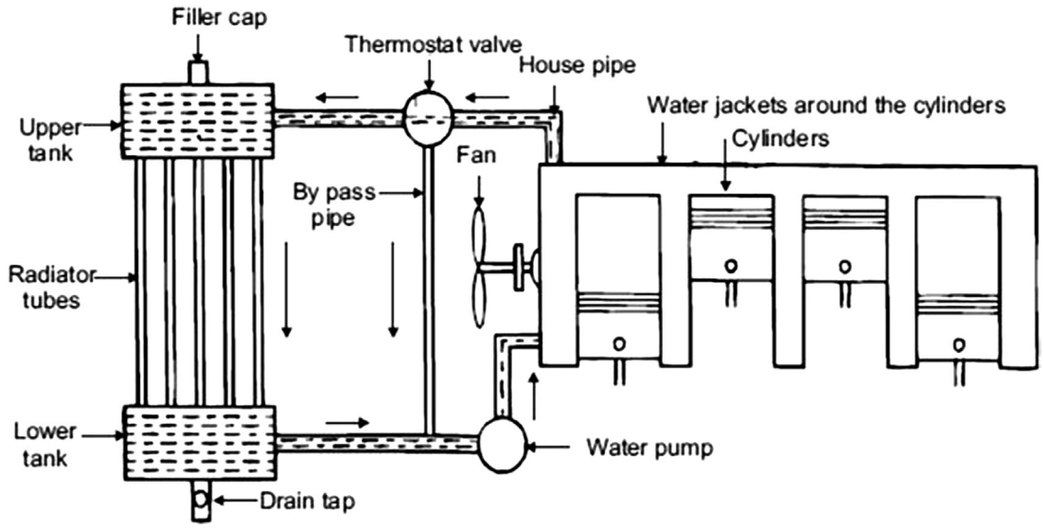

Figure 7.3.1 Radiator

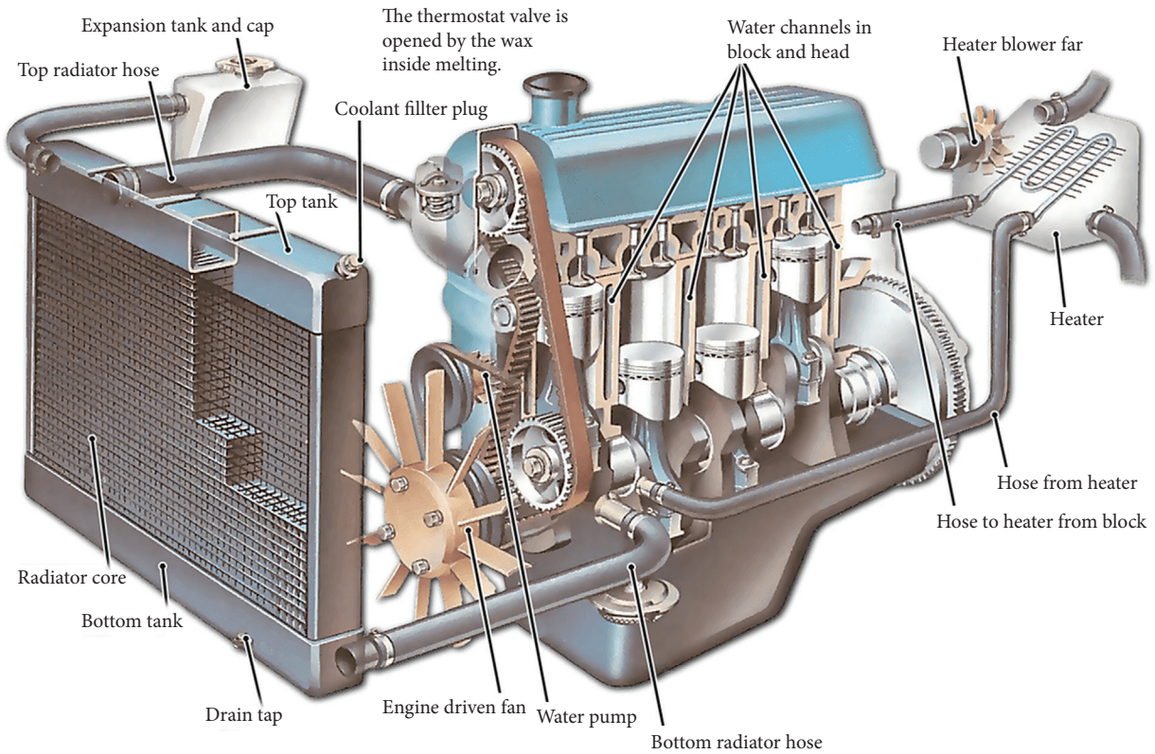

Figure 7.3.1(a) Radiator

Types of radiator:

We can classify radiators in to two types: they are

1. Tubular type radiator
2. Cellular type radiator (or) honey comb type radiator

AM_Unit_07.indd 145 31-01-2019 17:50:48



What is a Radiator?

Radiators are heat exchangers used to transfer thermal energy from one medium to another for the purpose of cooling and heating.

In automobiles it is responsible for preventing the car engine from overheating.

It uses coolant (water or oil) to keep the engine running at a healthy temperature.

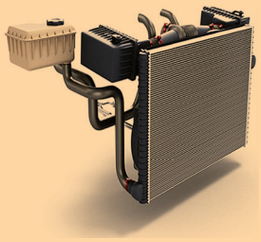

7.3.1(a) Tubular Type Radiator

Small diameter tubes are used for connecting the upper and lower tank in the radiator. Water gets cooled by flowing through the number of tubes. The outside of the tube walls are attached with cooling fins. The fins and tubes are made up of pure copper. The fins are arranged horizontally with each other. In this type of radiators the cooling process is affected for the entire distance of tube if there is any blockage inside the tubes. This type of radiator is lower in weight and simple in structure and hence used in most of the vehicles.



Figure 7.3.1(a) Tubular type radiator

7.3.1(b) Cellular (or) Honeycomb Type Radiator

In this type of radiator, the hot water coming from the upper tank is allowed to pass through the tubes which are in honeycombed structure and gets cooled before reaching the lower tank. Two honeycombed structure tubes are connected in between the water flowing passage. By this structure, any block occurs inside the tube will not reduce the cooling performance. This type of radiator is mostly used in racing cars. They are costlier than tube type radiators. The figure 7.3.1(b)shows the picture of the honeycomb radiator.



Fig 7.3.1(b) Honey comb type radiator

AM_Unit_07.indd 146 31-01-2019 17:50:49

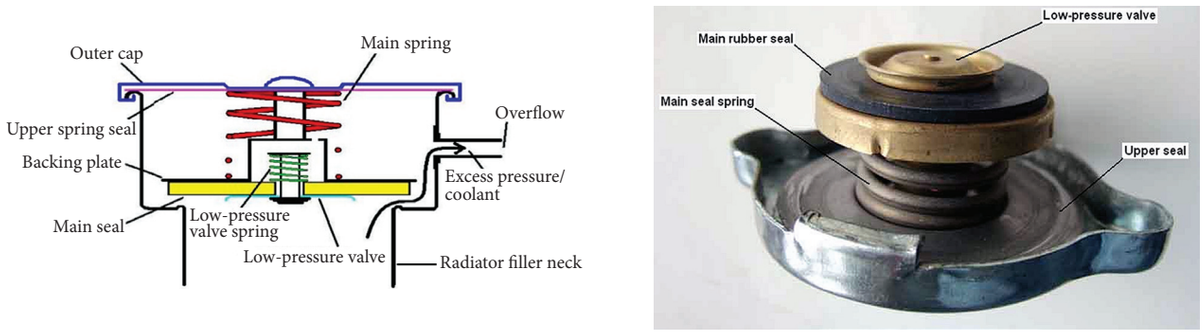

Figure 7.4 Pressure Cap

7.4 PRESSURE CAP

The component used to close the upper tank of the radiator is called as the radiator pressure cap. This cap prevents the flow of evaporated water (steam) outside from the upper tank. It also helps in avoiding flow of water outside the tank when the vehicle is traveling on any bumps and pot holes. In cold climatic countries water inside the radiator gets cooled naturally when the engine is at rest. In such condition vacuum may occur inside the tank. In such situations the exterior air comes inside the tank and replaces the vacuum area. The pressure in the pressure cap is released from the pressure valve by opening the pressure cap when the pressure inside the water tank is increased. When water is cooled the vacuum vale is opened and air is allowed to enter in to the radiator for protecting it.

7.5 THERMOSTAT

A specified temperature must be maintained in the cooling system to operate the engine safely and efficiently. This temperature is generally in the order of 70 deg to 80 deg for petrol engine and 80 deg to 85 deg for diesel engines. To maintain the temperature a thermostat arrangement is used. It blocks the coolant supply until the engine is warmed up. The thermostat valve is placed in between the engine and upper tank of the radiator. Thermostat housing consists of an inlet and outlet valve. Inside the housing the thermostat is placed. There is a bypass line arrangement for passing cooling water after the engine is started and until it reaches the required temperature. Cooling water starts to flow through the tubes by opening the thermostat valve when the engine reaches its specified temperature and the cooling water is sent to the upper tank in the radiator.

Basically there are two types of thermostat valves used in automobiles, they are

1. Bellows type thermostat
2. Wax type thermostat

7.5.1 Bellow Type Thermostat

In this type of thermostat, there is a frame in the upper side and valve in the lower side which is attached to the bellows. Bellows are filled with either alcohol or acetone which is easily evaporating chemicals. These chemicals have lower boiling points such as 70 deg to 80 deg. When the engine's coolant(water)

AM_Unit_07.indd 147 31-01-2019 17:50:49

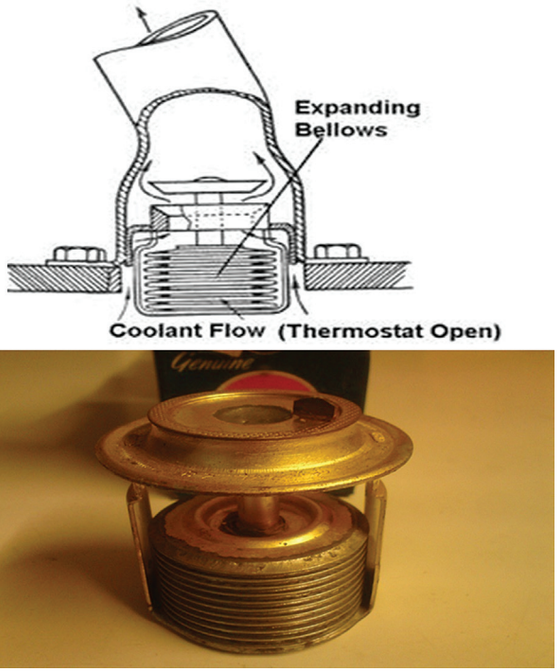

Figure 7.5.1 Bellows Type Thermostat

temperature reaches 70 to 80 deg Celsius, the chemicals inside the bellows get evaporated and allow the bellows to get expanded. The valve connected to the bellows now open and the water from the engine is sent to the upper tank of the radiator. When the cooling water temperature is reduced to 80 deg Celsius the chemicals inside the bellows get cooled and shrink. Now the valve connected to the bellows gets closed by this shrinkage. By this way thermostat controls cooling water circulation. The figure 7.8 shows the arrangement of the bellows type thermostat.

Comparison of air cooled and water cooled system:

Air cooled system	Water cooled system
Air is a medium of cooling	Water is medium of cooling
Fins are used	Water jacket, water pump radiator, thermostat like components are used.
Construction is easy	Construction is difficult
Less space is required for installation.	Needs more space
Produces more noise	Less noise
It runs with all the climatic changes.	In cold climatic countries water will freeze. So this type is not used in such countries.
No sediments or corrosion in the system	Corrosion and sedimentation occur.
Cooling process is not affected by any damage of one or two fins	If there is a water leak, it affects the cooling process.
This system cools the engine randomly.	This system cools the engine uniformly.
Conductivity of temperature is low	High
Not suitable for multi cylinder engines	Suitable for multi cylinder engines
Production and maintenance cost are low	high
Mostly used in two wheelers	Used for Lower, medium and high duty vehicles.

AM_Unit_07.indd 148 31-01-2019 17:50:50

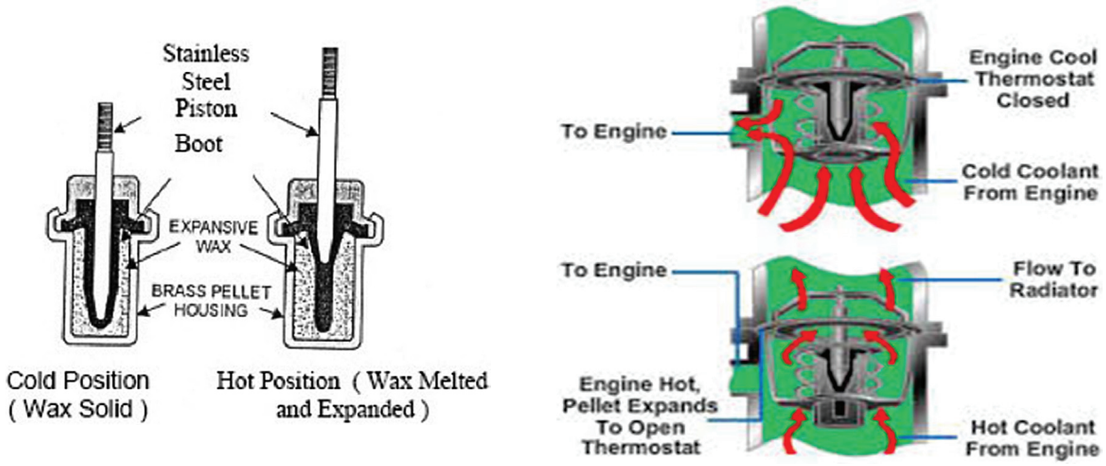

Figure 7.5.2 Wax Type Thermostat

7.5.2 Wax Type Thermostat

In this wax type thermostat there is a container which is filled with wax. This container is made up of high temperature conducting metals such as steel, brass or coppers as the material. The wax inside this container is fully sealed with rubberised material. A conical shaped movable steel pin with wax at one end and body at another end are connected with this type of thermostat. When the temperature of

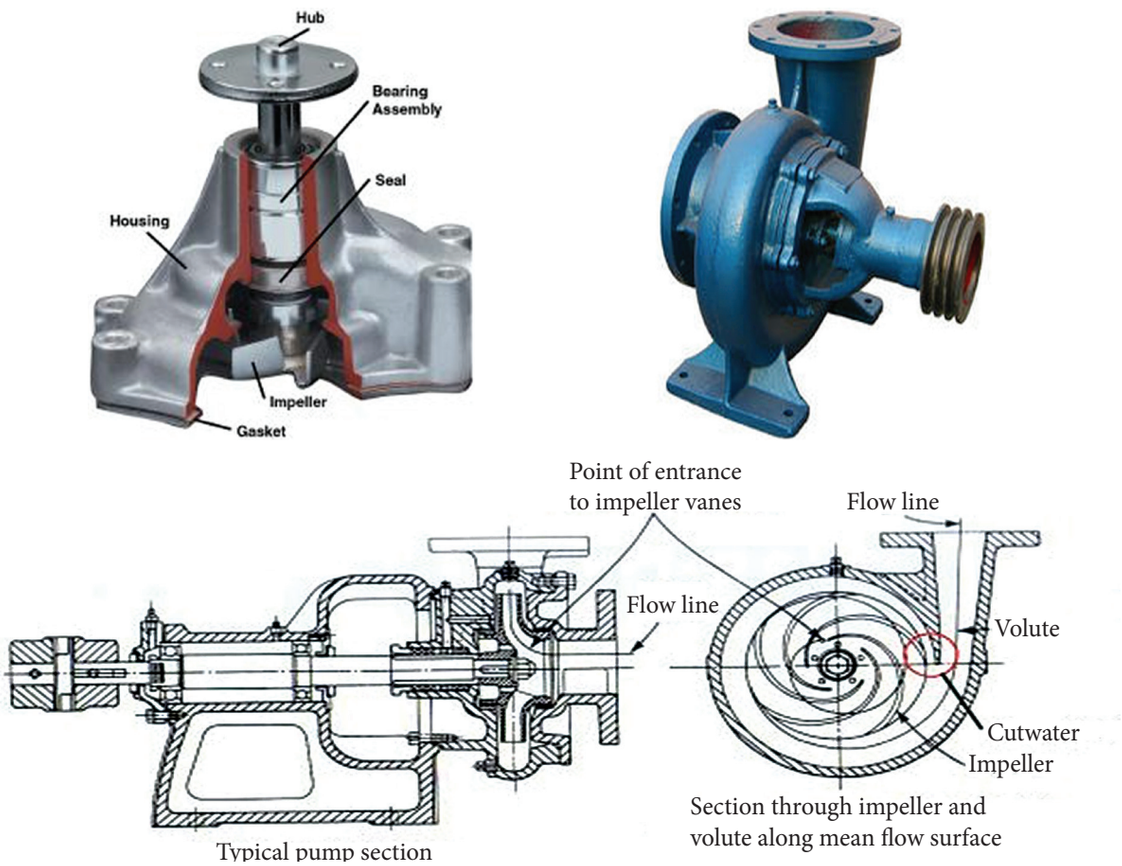

Figure 7.6 Water Circulation Pump

AM_Unit_07.indd 149 31-01-2019 17:50:51

water gets increased, the wax gets melted and expands the bottom of steel pin in the opposite direction and pushes the seal. By compressing the seal against spring force in the container, the container valve opens. When container gets cooled the wax shrinks and reduces the pressure acting on the steel pin and the container comes to its original position. Now the container valve gets closed.

7.6 WATER PUMP

The water pump is placed in between in front of the engine's cylinder block and the radiator. The Pump impeller consists of a shaft, bearings and water seal which are placed inside the housing. Impeller is fixed to the shaft. The impeller has flat or bended vanes with round shape. Water seal is placed to arrest the leakage with the help of bearings.

Working:

When the impeller rotates, the water in between the blades are expelled out due to centrifugal force. The expelled water moves to the engine water jackets through the pipe with high pressure. The power to the impeller is given from the V-pulley arrangement. The water pump increases the circulation of cooling water. Fig 7.6 shows the water pump.

7.7 ENGINE FAN

When the vehicle runs, natural air is enough to cool the water. However during heavy load and during stationary conditions, air from the atmosphere coming by natural means to the radiator is not sufficient to cool the water. Hence fan is required to supply more air to radiator and to engine. Fan will be coupled with water pump pulley. The fan sucks more air and passes to the radiator core and then cools the water. There are many types of cooling fans used, which include,



Figure 7.7 Engine fan



What is catalytic converter?

Catalytic converter was invented by Eugene Houdry in 1930.

Inside the converter, the gases flow through a dense honeycomb structure made from a ceramic and coated with the catalysts.

It reduces harmful NOx and CO emissions into harmless one.

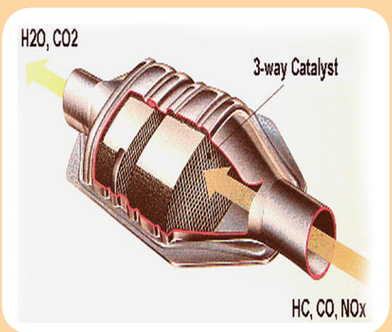

AM_Unit_07.indd 150 31-01-2019 17:50:51

1. Suction type
2. Blower type
3. Electrical type

7.8 ANTI-FREEZING SOLUTIONS

During cold climate conditions and at hill stations water generally gets frozen in the water cooling system. Due to this radiator core, water jacket and rubber hoses in the cooling system may get damaged. In addition more power is needed to start the engine. To overcome these difficulties chemical agents are added to the water to prevent it from freezing. These agents are called as anti freezing solutions. Some of the anti freeze solutions used in automobile are,

1. Methanol
2. Methyl alcohol

F5M3P

Cooling System Capacity ▼	ANTIFREEZE PROTECTION CHART (°F) — Quarts Required for Low-Temperature Protection ►									
QUARTS	3	4	5	6	7	8	9	10	11	12
9	5°	-15°	-43°	-76°						
10	10°	-4°	-26°	-54°	-76°					
11	12°	0°	-14°	-40°	-60°					
12	14°	5°	-8°	-28°	-51°					
13	15°	8°	0°	-14°	-44°	-61°	-76°			
14	17°	10°	3°	-8°	-28°	-44°	-60°			
15	18°	12°	5°	-4°	-14°	-35°	-54°	-76°		
16	19°	14°	9°	1°	-9°	-28°	-44°	-60°		
17	20°	16°	11°	3°	-2°	-15°	-31°	-60°		
18	21°	17°	12°	5°	0°	-13°	-26°	-33°	-53°	-76°
19		18°	13°	7°	2°	-10°	-20°	-32°	-50°	-60°
20			14°	9°	3°	-6°	-15°	-26°	-33°	-54°
21			15°	12°	5°	0°	-10°	-22°	-32°	-51°
22			16°	13°	8°	3°	-5°	-10°	-26°	-33°
23			17°	13°	10°	4°	-3°	-8°	-22°	-32°



Figure 7.8 Anti-freezing solutions

3. Glycerin
4. Alcohol
5. Ethylene glycol

The above chemical components must have the requirements such as easily soluble in water, should withstand very high temperature, non-corrosiveness and should not deposit on the radiator core and rubber hose.

7.9 MAINTENANCE OF COOLING SYSTEM

The following are the check lists for the proper maintenance of the cooling systems

1. If there is any blockage occurs inside the radiator, water tubes and water jackets they have to be cleaned by flushing process.
2. The fan belt has to be replaced if it is exhausted or cracked.
3. The shape of fan blade has to be checked whether it is ok or not.
4. The cells must be straightened in the radiator if they are blended.
5. If there are any unwanted materials or insects nest are present in the radiator blades, they must be cleaned by using compressed air.
6. If there is any damage or hole occurs in the radiator tubes (rubber), it has to be replaced.
7. Fine tight must be given to the radiators tube clips.
8. Leakage in the radiator pipe, jar, tank, water pump, thermostat valve and drain gauge must be checked and leak proof has to be ensured.

AM_Unit_07.indd 151 31-01-2019 17:50:51

9. Current status of thermostat valve has to be checked.
10. The radiator has to be inspected whether it is fixed properly or not.
11. The radiator gate valve has to be checked for its position which is closed properly.

Troubles and remedies of cooling system:

Loss of cooling liquid:

Causes	Remedies
1. Clips in the radiator hose pipes may have released.	Have to fine tight the clips
2. There may be tearing occurred in the rubber tubes.	Has to be replaced.
3. There may be a leakage occurred in the radiator cap portion.	Has to be corrected by using altering process.
4. Cylinder head jacket may get defected.	Hasto change to a new one.
5. Water pump or water seal may be damaged.	Gasket or seal should be replaced with a new one.
6. Thermostat valve may be defected.	Hasto be changed with a new one.
7. Drain gauge in the radiator may be loosen or broken.	Has to be tightened or has to be changed with new one.

Engine over heating:

Causes	Remedies
1. There may be a reduction in water level in the radiator.	Has to be filled with required quantity of water.
2. There may be water leakage during cooling process.	Leakage should be avoided by repairing the pipe line.
3. Water pump may get damaged.	Has to be repaired.
4. Fan belt may be loosened or teared.	Has to be tightened at loosened area or has to be changed with a new one.
5. Thermostat valve may get damaged.	Has to be changed with a new one.
6. There may be a chance for blockages inside the radiator water tubes.	Blockages should be cleaned by using reverse flushing process.
7. There may be blockages in water jackets due to corrosion and sedimentation.	The water jackets have to be cleaned by removing blockages.

AM_Unit_07.indd 152 31-01-2019 17:50:51

8. There may be blockages in the radiator fins.	Have to be removed or cleaned.
9. There may be an auto ignition.	Has to be corrected.
10. There may be changes in valve timing and ignition timing.	Has to be corrected.
11. There may carbon deposition in the cylinder head, valves, piston and combustion chamber.	Need to be cleaned by De carbonizing technique.
12. There may be defects in break or clutch	Have to be corrected.
13. The vehicle may be over loaded.	Enough amount of goods to be carried.
14. There may be blockages in the exhaust tail pipe.	Have to be removed.
15. Engine bearing may get damaged or broken.	Has to be changed with a new one.
16. There may be blockages in air cleaner or air inlet manifold.	Have to be removed or corrected.
17. Fuel injection timing may be incorrect.	Has to be checked and corrected.

Over noise from water pump:

Causes	Remedies
1. Impeller in the water pump may be loosened.	Has to be tightened.
2. Pulley in the pump shaft may be loosened.	Has to be tightened.
3. Impeller may rotate unevenly inside the pump housing.	Has to be fixed at the right place.
4. Bearing in the water pump may damage or lubricating oil may not be there in the bearing.	Oil has to be applied or changed with new bearing.
5. Impeller may be broken.	Has to be checked and corrected.

AM_Unit_07.indd 153 31-01-2019 17:50:51

Rapid wear on fan belt:

Causes	Remedies
1. Belt may be under over tight	Has to be adjusted for exact tension.
2. Belt may be affixed with improper length.	The belt that is recommended by the manufacturer has to be used.
3. There may be a deposition of oil or grease in the belt.	Clean the belt with petrol and fix it.
4. Belt may not be fixed properly to the pulley.	Affix the belt properly on the pulley.

Over noise from radiator fan:

Causes	Remedies
1. Fan belt may be fixed with heavy tight.	Has to be adjusted for exact tension.
2. Fan belt may be worn out.	Has to be changed with a new one.
3. Fan pulley may be loosened.	Has to be tightened.
4. There may be high amount of ply in the water pump shaft.	Has to be adjusted for correct scale of ply.
5. Fan blades may be expanded.	Have to be changed with a new fan.
6. Water pump pulley may leave its position and hanged on the radiators body.	Has to be checked and repaired.

Student Activity

I. Students have to follow the following safety precautions:

1. Students should visit the nearby workshops to study the process of engine cooling with external fins and should have a hands-on experience on engine dismantling and assembling.
2. Students should visit the nearby workshops to study the process of cooling engines with water and should a report with the sketch of radiator tank, water pump and thermostat valve.

AM_Unit_07.indd 154 31-01-2019 17:50:51

Glossary

Decarbonizing	-	கரி நீக்குதல்
Pressure Cap	-	அழுத்த நிறுத்தி மூடி
Centrifugal Pump	-	மையவிலக்கு தூக்கி
Thermostat	-	வெப்ப கட்டுப் படுத்தி
Water Pump	-	தண்ணீர் தூக்கி
Freezing	-	உறைதல்
Water Jacket	-	தண்ணீர் உரைகள்
Deposition	-	கசடு படிதல்
Blockages	-	அடைப்புகள்
Corrosion	-	அரிப்பு

References

1. Rajput R.K. Internal Combustion Engines, Laxmi Publications (P) Ltd, 2006.
2. Ganesan V." Internal Combustion Engines, Third Edition, Tata McGraw - Hill, 2007.
3. Duffy Smith, Auto Fuel Systems, Good Heart Wilcox Company Inc., Publishers, 1987.
4. Eric Chowanietz, Automobile Electronics, SAE International, 1995.
5. Internal Combustion Engine Handbook: Basics, Components, Systems and Perpectives, Richard Van Basshuysen and Fred Schafer (Editors) SAE International USA and Siemes VDO Automotive, Germany, 2002.

Webliography

1. https://en.wikipedia.org/wiki/Internal_combustion_engine_cooling
2. https://en.wikipedia.org/wiki/Oil_cooling
3. https://en.wikipedia.org/wiki/Water_cooling
4. https://en.wikipedia.org/wiki/Radiator
5. http://www.standardradiators.com/
6. http://www.gwradiators.com/
7. https://shop.bsigroup.com/ProductDetail/?pid=000000000030062370

AM_Unit_07.indd 155 31-01-2019 17:50:52

SAMPLE QUESTIONS

Choose the correct answer

1. Which chemical is used to prevent freezing of cooling water?
   a) Ethyl glycol
   b) Acetone
   c) Methane
2. Which valve is located in radiator pressure cap?
   a) Pressure valve
   b) Thermostat valve
   c) Pressure and vacuum valve
3. How many types of radiators according to the flow of water and Air?
   a) Two
   b) Three
   c) Four
4. Which is used to prevent engine over cooling?
   a) Water pump
   b) Radiator
   c) Thermostat
5. What is the effect if low water level in radiator?
   a) Engine if over heated
   b) Fan belt wear quickly
   c) More noise in water pump

62J48

Answer the following questions

1. What are the disadvantages due to the over heat of the engine?
2. What are the disadvantages due to the over cool of the engine?
3. What are the advantages and disadvantages of the Air Cooling system?
4. What are the different types of Water Cooling system?
5. What are the important parts of the Pump circulation system?
6. What are the merits and demerits of the water cooling system?
7. What are the parts in the cooling system?
8. Name the types of the radiator.
9. What is meant by radiator pressure cap?
10. What is meant by Thermostat valve?
11. Tabulate the difference between Air cooling and water cooling system.
12. Explain the working principles of water pump.

AM_Unit_07.indd 156 31-01-2019 17:50:52

Unit 8

Engine Lubrication System

Contents

8.0 Introduction
8.1 Advantages of Lubrication
8.2 Properties of Lubricating Oil
- 8.2.1 Viscosity
- 8.2.2 Oiliness (or) Adhesiveness
- 8.2.3 Fluidity
- 8.2.4 Volatility
- 8.2.5 Flash Point
- 8.2.6 Fire Point
- 8.2.7 Stability
- 8.2.8 Corrosiveness
- 8.2.9 Cleanliness
- 8.2.10 Emulsification
- 8.2.11 Cloud Point
- 8.2.12 Foaming

8.3 Types of Lubricants
- 8.3.1 Solid Lubricant
- 8.3.2 Semi Solid Lubricant
- 8.3.3 Liquid Lubricants
  - 8.3.3.1 Animal Oils
  - 8.3.3.2 Vegetable Oils
  - 8.3.3.3 Mineral Oils

8.4 Types of Lubrication System
- 8.4.1 Petroil System
- 8.4.2 Splash Lubrication System
- 8.4.3 Pressure Lubrication
- 8.4.4 Semi-Pressure Lubrication System

8.5 Parts of Lubrication System
- 8.5.1 Oil Filters
  - 8.5.1.1 Cartridge Filters
  - 8.5.1.2 Edge Type Oil Filters
  - 8.5.1.3 Centrifugal Type Oil Filters
- 8.5.2 Oil Pump
  - 8.5.2.1 Gear Pump
  - 8.5.2.2 Rotor Pump
  - 8.5.2.3 Plunger Pump
  - 8.5.2.4 Vane Pump

8.6 Pressure Relief Valve
- 8.6.1 Ball Type Pressure Relief Valve
- 8.6.2 Plunger Type Pressure Relief Valve

8.7 Failures in Lubricating System
8.8 Reasons for Failures in Lubricating System
8.9 Methods to Troubleshoot

AM_Unit_08.indd 157 12/20/2019 5:32:47 PM

Learning Objectives

- To learn about the various grades of lubricating oils used (SAE 20, SAE 40, SAE 90, SAE 120) in cars, buses and trucks.
- To learn the importance of engine oil and lubrication system to avoid friction and overheating.

8.0 INTRODUCTION

The process of using lubrication oil to reduce friction between two moving parts is called as lubrication. Metallic contacts between two moving pats lead to friction, heat, wear, noise and seizure of the engine. To overcome this problem, lubricating system is needed in all automobiles. Lubrication is also helpful for smooth functioning of the moving parts in contact. Automobiles have many moving and rotating parts. If lubrication system is not present in vehicles, the durability of the components will be reduced due to wear and tear caused by friction. Hence to increase the life time of the engine, lubrication system is essential in automobiles.

8.1 ADVANTAGES OF LUBRICATION

The Engine Lubrication system

1. Reduces the friction between moving parts.
2. Reduces the damage of parts due to moving in contact.
3. Removes/Decreases the heat due to friction.
4. Cleans the tiny metal particles and dust that are present between two moving parts.
5. Acts as a seal between piston ring and cylinder to provide compression.
6. Reduces the vibrations and makes the parts of the engine to function silently.
7. Increases the strength of engine.
8. Prevents rusting.
9. Helps in increasing the lifetime of engine components.

8.2 PROPERTIES OF LUBRICATING OIL

The lubricating oil or paste used for reducing friction is known as lubricant. The related properties of the Engine Lubricants are

1. Viscosity.
2. Oiliness or Adhesiveness.
3. Fluidity.
4. Volatility.
5. Flash point.
6. Fire Point.
7. Stability.
8. Corrosiveness.
9. Cleanliness.
10. Emulsification.
11. Cloud point.
12. Foaming.



AM_Unit_08.indd 158 12/20/2019 5:32:47 PM

What is SAE International?

- SAE stands for Society of Automotive Engineers.
- It is a global association of more than 1,28,000 engineers and technical experts in the field of aerospace and automotive industries for the benefit of society.

8.2.1 Viscosity

Viscosity of a liquid is the ability that describes a fluid's resistance to flow. Oils with high density are highly viscous in nature. Viscosity decreases with increase in temperature of lubricating oil and increases with decrease in temperature. Society of Automotive Engineers has classified the lubricating oils based on the nature of viscosity. Viscosity of the oil increases with increase in SAE unit. Viscosity is more important among the properties of lubricating oil. It is measured by using the instrument called as viscometer. Viscosity is always measured along with the temperature. For example: SAE 40 at 210° F. This represents that the oil at 210° F has 40 units of viscosity. The higher the viscosity, the higher the SAE viscosiy grade number is.

8.2.2 Oiliness or Adhesiveness

Oiliness and adhesiveness are the properties of making an oily layer at the surfaces of metals in contact. This property should be high for lubricating oil. It is helpful in making the thin oil layer even at high temperatures in minute gaps.

8.2.3 Fluidity

Fluidity is the property of easy flow of lubricating oil in very small gaps. It helps in making a soft layer on the surfaces of junctions even at high temperature.

8.2.4 Volatility

Volatility is the ability of the oil to evaporate at high temperatures developed due continuous functioning of engine. Lubricating oil should have low volatility even at very high temperatures. Otherwise during the functioning of engine lubricating oil will evaporate which may lead to wastage of the lubricating oil, sometime even causing fire accidents.

8.2.5 Flash Point

The flash point is the minimum temperature, at which the oil produces the flash when an ignition source is brought close to the oil vapour and the flash will not continue when the ignition source is removed.

8.2.6 Fire Point

The fire point is the temperature at which the vapour of the oil continues to burn for atleast 5 seconds after ignition by open flame. The fire point will be generally at 10^0 to20^0C above the flash point. Lubricating oils should have higher fire point, to avoid evaporation and ignition.

AM_Unit_08.indd 159 12/20/2019 5:32:47 PM

8.2.7 Stability

During engine's functioning, the lubricating oil should reduce the friction without any oxidation. If lubricating oil is oxidised, it produces acids which leads to dirt and corrosion of the engine parts.

8.2.8 Corrosiveness

During engine's functioning, several parts of the engine are subjected to corrosion due to the chemicals present in the lubricating oil. Hence, lubricating oils should have very less amount of acids and chemicals which will cause corrosion. This is called corrosiveness.

8.2.9 Cleanliness

Lubricating oils should possess the property of cleanliness so that dusts and unwanted materials in the lubricant could be removed. This property helps in cleaning the carbon deposits in the lubricant due to burning of fuels. This is called cleanliness. Normally inorganic lubricants have this property more than organic lubricants.

8.2.10 Emulsification

If lubricating oil is dissolved in water, it results in emulsification. If it dissolves in water, it will lose the property of lubrication. To prevent this additives are added along with the lubricating oil.

8.2.11 Cloud Point

The Temperature at which lubricating oil first changes its phase from liquid state to solid state is known as cloud point.

8.2.12 Foaming

During lubrication action, lubricating oils will have large amount of very small air bubbles to be present. This process is called foaming. It may lead to oxidation and also these bubbles get deposited on the friction surface and prevent the lubricant to flow through the surfaces.

8.3 TYPES OF LUBRICANTS

The lubricants used in machines and automobiles are listed below:

1) Solid lubricant.

2) Semi solid lubricant.

3) Liquid lubricant.

8.3.1 Solid Lubricant

Lubricant materials available in solid state are called as solid lubricants. The solid substance like fibre, graphite, carbon, mica, vax are some of the examples for solid lubricants. They are used in places where liquid lubricants can't be used and also used in high temperature places. See Figure shown in 8.3.1 Solid Lubricant

8.3.2 Semi Solid Lubricant

Lubricant materials present at the state in-between solid and liquid are called semi solid lubricants. The places at high stress and where liquid and solid lubricants cannot be used, semi-solid lubricants are used. In automobiles, in all the bearings other than engine bearing the semi solid lubricants are used. The following table shows the examples for semi solid lubricants and their applications in automobiles. See Figure shown in 8.3.2, Semi Solid Lubricant.

AM_Unit_08.indd 160 12/20/2019 5:32:47 PM



Figure 8.3.1 Solid Lubricant



Figure 8.3.2 Semi Solid Lubricant

Table 1. List of Semisolid lubricants and their applications.

S. No	Lubricant Materials	Using Places
1	Calcium based grease	In joints of vehicles, In cooling pumps.
2	Sodium based grease	Suitable for high temperature, to prevent corrosion.
3	Aluminium based grease	In chain joints, in vehicle joints.
4	Lithium based grease	In all joints of vehicles, in base joints of vehicles

8.3.3 Liquid Lubricants

Lubricants in liquid state are called as liquid lubricants. They are suitable for operating the engines at the required temperature and also for high speed engine's operation. The following are the examples for the liquid lubricants. See Figure shown 8.3.3 Liquid Lubricants.

1) Animal oils.
2) Vegetable oils.
3) Mineral oils.



Figure 8.3.3 Liquid Lubricants

8.3.3.1 Animal Oils

Animal oils are produced from fats of the animals. They mostly vaporise easily and have the tendency to produce gum

AM_Unit_08.indd 161 12/20/2019 5:32:48 PM

What is a Piston Valve?

- Piston valve was developed in 19th century.
- It is a device used to control the motion of a fluid along a tube or pipe by means of the linear motion of a piston.
- They are ideally recommended for critical and hazardous media, including Steam, Heat transfer oils, acids and gases.

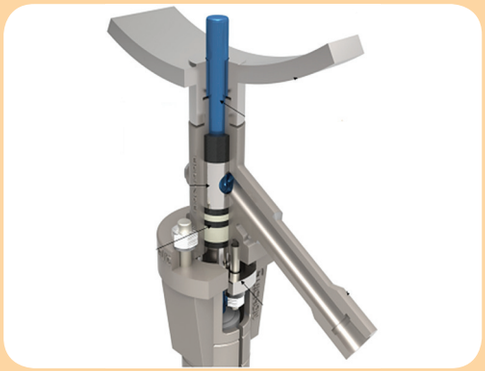

like products when used. Hence they are not generally used in motor vehicles.

8.3.3.2 Vegetable Oils

They are obtained from vegetable seeds. For example: Linseed oil, castor oil and palm oil. Except castor oil all the vegetable oils easily get converted into gum like materials. At high temperatures viscosity of the castor oil decreases. Castor oils were used in old vehicles. However it is not used in modern vehicles.

8.3.3.3 Mineral Oils

These are the oils mostly used in all vehicles. These lubricating oils are obtained as lubricants in the separating processing of petroleum refining. Their important properties do not vary significantly even at high temperatures. They do not dissolve in water, acid free and corrosion free. Hence they are largely used in all automobiles.

8.4 TYPES OF LUBRICATION SYSTEM

All the parts of engine such as crankshaft, bearings, crank pin, both ends of connecting rod, piston pin and inner wall of cylinder, piston rings, valve mechanism, timing gears and camshaft bearings are made to function along with the engine. Hence the above parts must be lubricated to avoid friction in these moving parts. The following are the types of lubricating systems used in engines.

Lubricant Systems:

1. Petrol oil (mist) lubricating system.
2. Splash lubricating system.
3. Pressure lubricating system.
4. Semi pressure lubricating system.

- Oil sump
- Oil pump
- Pick-up screen
- Pressure regulator
- Oil filter
- By-pass valve
- Oil galleries
- Dipstick
- Pressure indicator

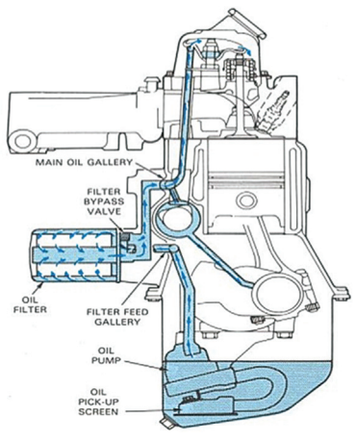

Figure 8.4 Parts of Lubrication System

AM_Unit_08.indd 162 12/20/2019 5:32:48 PM

8.4.1 Petrol System

This type of lubricating system is used in small vehicles like in two wheelers (e.g. TVS 50 and other mopeds and also in Motor cycles with two stroke engines. In this system lubricating oil is of about 2% to 3% is mixed along with petrol and used. It is a simple lubricant system commonly used in two stroke two wheelers and small size engines.

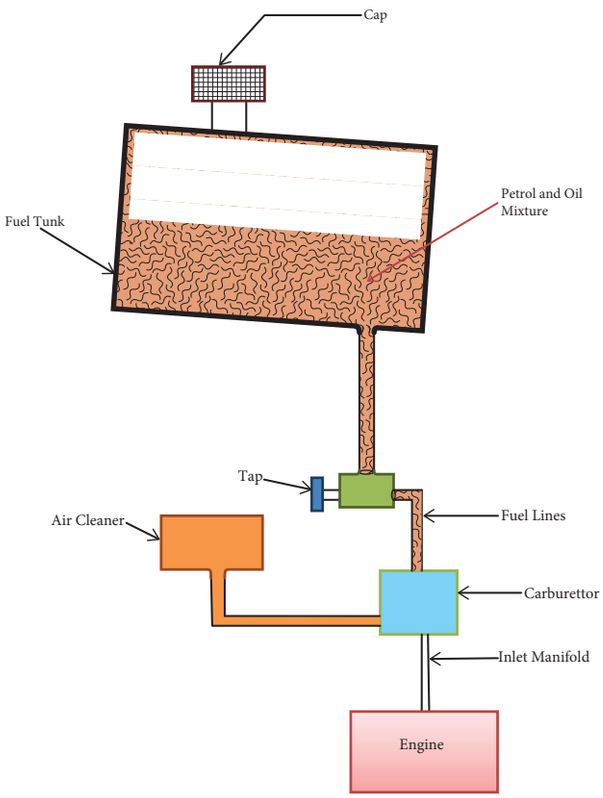

Figure 8.4.1 Petrol Oil Lubrication System

8.4.2 Splash Lubrication System

In this system, at the bottom of the crank case, oil sump will be present and filled with the lubricating oil. The engines with this type of system have dipper or scoop like arrangement fitted at the bottom of the connection road. When the piston moves towards bottom dead centre, the scoop placed at the connecting rod dips into the oil sump and scoops the oil. When the piston moves up the oil in the scoop will be splashed on all over the interior of the crankcase, into the piston and to the exposed portions of the cylinder wall and other components. See Figure shown in 8.4.2 Splash Lubrication System

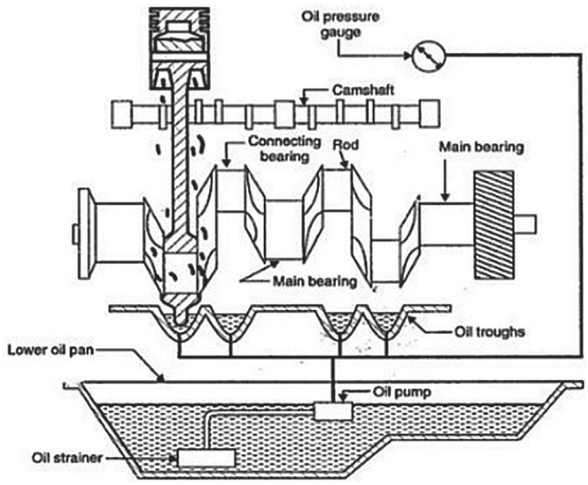

Figure 8.4.2 Splash Lubrication System

8.4.3 Pressure Lubrication

Sending the lubricating oil at high pressure using a pump to all the parts of engines is called pressure lubrication. In this system oil is kept at the base of crank case. During operation of the engine, oil pump sucks the oil from sump through the strainer. This oil is subjected to high pressure of about 200 kPa to 400 kPa and then sent to the oil filter. It is then filtered in the oil filter and sent to main gallery. From the main gallery the oil is sent to main journal bearings and sub journal bearings of the crank shaft for lubrication. The oil is then sent to the piston pin and piston rings via the oil hole of connecting

AM_Unit_08.indd 163 12/20/2019 5:32:49 PM

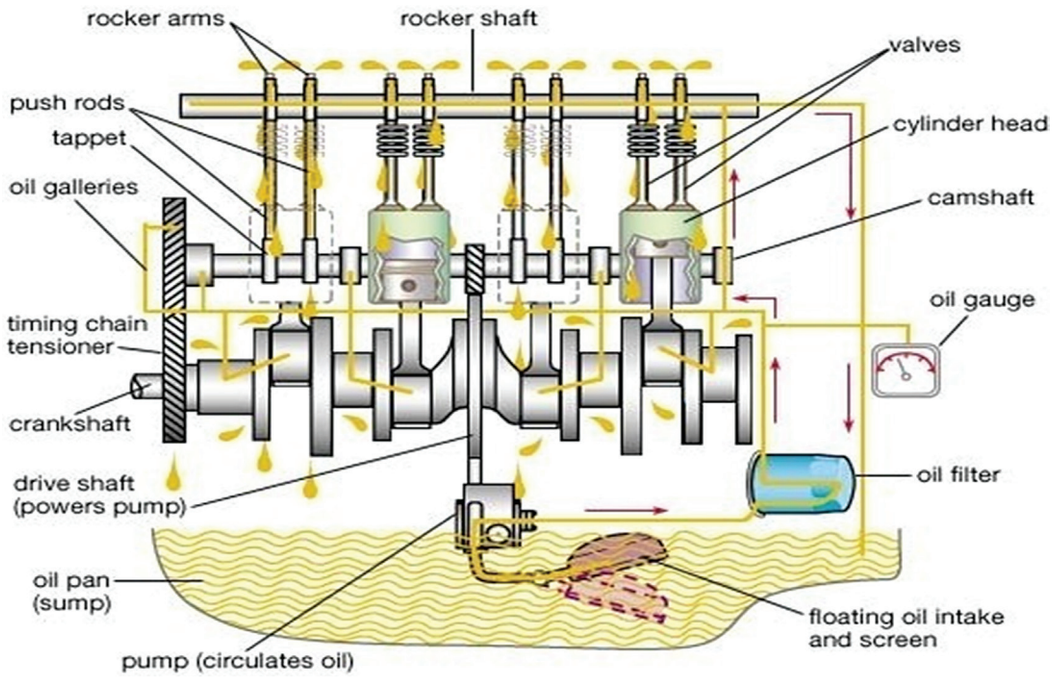

Figure 8.4.3 Pressure Lubrication System

rod. To lubricate the cam shaft and training gear from the gallery, the oil is sent to the rocker arm from oil holder and overhead valve by valve mechanism. In this system the oil pressure can be known and most of the engines use this type of system. See Figure shown 8.4.3 Pressure Lubrication System.

8.4.4 Semi-Pressure Lubrication System

It is the combination of splash and pressure lubrication system. This lubrication system is used in four stroke engines.

8.5 PARTS OF LUBRICATION SYSTEM

8.5.1 Oil Filters

This is used to filter the lubricating oil coming out from the oil pump which contains impurities and dust. The filters used in automobiles are, see fig shown in 8.5.1 Oil Filter.

1. Cartridge filters.
2. Edge filters.
3. Centrifugal filters.

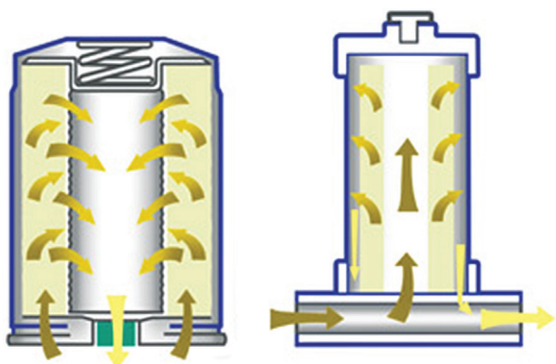

Figure 8.5.1 Oil Filter

8.5.1.1 Catridge Filters

It is used in almost all automobiles. This filter cleans very minute dust particles in the oil up to 5 microns. The oil is passed through the filter and taken out

AM_Unit_08.indd 164 12/20/2019 5:32:49 PM

at the outlet by which the dust particles of more than 5 microns are removed. This type of filter uses cloth or fibre material. There is a need for replacement of cloth or the filter material from time to time. See fig shows in 8.5.1(a) Catridge Filters.

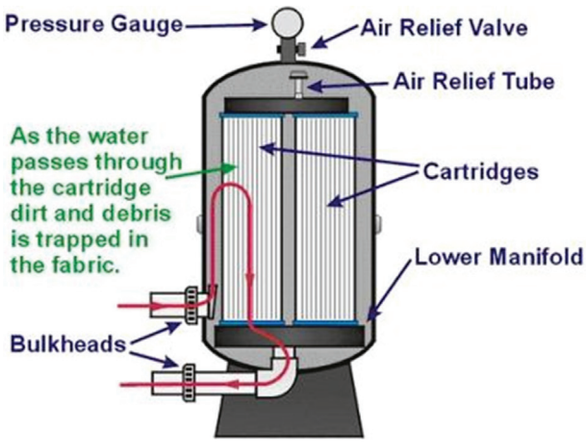

Figure 8.5.1(a) Cartridge Oil Filter

8.5.1.2 Edge Type Oil Filters

This filter contains a soft disc made up of brass material. This filter is divided into two parts. One part is attached to the spindle which is at the centre of the filter and the other part is supported by the square rod at the edge of the filter. The gap in between the disc is in few microns. When the oil flows through the each disc, the dirt gets deposited on the upper surface of the discs and then it passes out through the outlet. During this, the dirt in the spindle and square rod gets deposited at the bottom of filter body. See fig shows in 8.5.1(b) Edge Type Oil Filters.

8.5.1.3 Centrifugal Type Oil Filters

In this type of filter, the impure oil coming from the oil pump reaches the hollow spindle at the centre of a rotor. The hollow sphere is surrounded by the pillars. The oil coming from the pillars fills the rotor and then goes through the tube of the rotor and comes out via jet at the base of the tube. Because of this, the rotor casting rotates in the opposite direction. During the rotation of the rotor

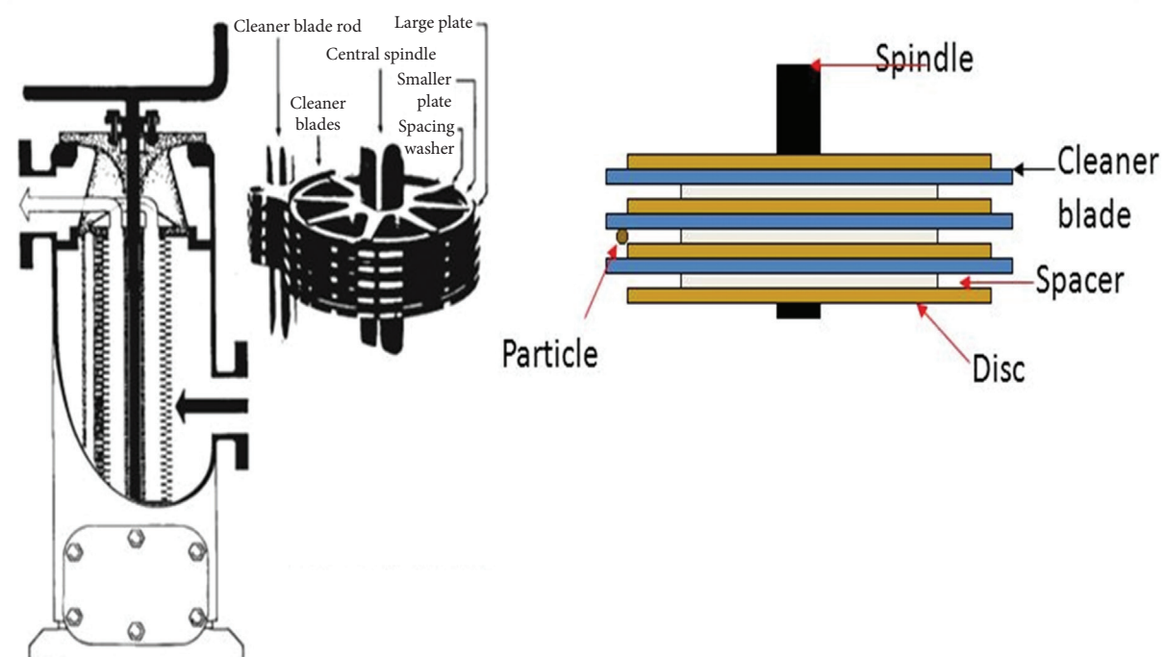

Figure 8.5.1(b) Edge Type Oil Filters

AM_Unit_08.indd 165 12/20/2019 5:32:50 PM

casing, the impurities in the oil from the jet get sprayed from the stationary casing due to centrifugal force. Finally the purified oil comes out through the outlet. See fig shows in 8.5.1(c) Centrifugal Type Oil Filter.

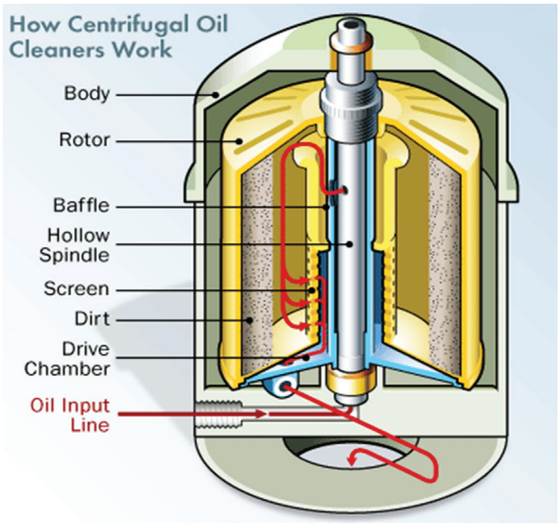

Figure 8.5.1(c) Centrifugal Type Oil Filter

8.5.2 Oil Pump

In lubrication system after the oil strainer, oil pump is placed which is the very important component of the system. Sending the oil with high pressure to the engine parts is the function of the oil pump. The oil pump is located at the crank case below the oil level. It is generally operated from the tip of distributer shaft. It gets the power from the skew gear of camshaft through distributer extension shaft. The speed of the oil pump increases with increase in the speed of the engine. This increases the pressure in the shaft. High pressure is controlled by using a pressure relief valve. The pump supplies sufficient oil to all the engine parts. Minimum pressure for the oil is maintained as 100 kPa. Normally to lubricate the engine, the lubricating oil of about 15 to 20 litres is circulated per minute. The oil is sent in large amount at high pressure through the oil pump. Hence selecting the suitable oil pump is very important. Due to bearing damage caused by friction and leakage of the oil from the engine parts there will be reduction in pressure of the oil. Hence to reduce damage of the components and to maintain sufficient pressure, suitable oil pump is needed. Figure shown in 8.5.2 Oil Pump.



Figure 8.5.2 Oil Pump

TYPES OF OIL PUMP:

The following are the types of oil pumps generally used in automobiles,

1. Gear pump.
2. Rotor pump.
3. Plunger pump.
4. Vane pump.

8.5.2.1 Gear Pump

In present automobiles, gear type oil pumps are generally used. This pump is a very simple one. It has two parts called as drive gear and driven gear. These two gears rotate together in a housing. Sufficient gap is maintained between the inner side of

AM_Unit_08.indd 166 12/20/2019 5:32:51 PM

housing and the tip of gear. In gear pumps two types of gears are generally used, they are 1) Spur gear and 2) Helical gear. To reduce noise in pump, helical gear is preferred.

During functioning of engine, the drive gear gains the power from the skew gear of the camshaft via distributor extension shaft. The driven gear attached to it also rotates due to the rotation of the drive gear as it is in mesh with the drive gear. However the rotation is opposite. Because of opposite rotation of the two gears, inner side of the pump creates vacuum. Due to this vacuum the oil in the sump tries to fill the empty space. The oil sucked into the housing of the pump through the inlet. In this way, the oil passes through the gears and housing gaps to fill the empty space via inlet. The oil pressure is increased here to about 2 kg/cm^2 to 4 kg/cm^2 and it comes out through the outlet. Since outlet is connected to the oil gallery, the oil is circled through all the moving parts of engine. Figure 8.5.2(a) shows the view of the gear type oil pump.

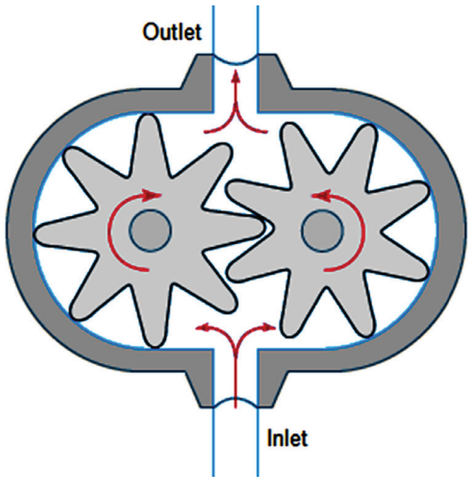

Figure 8.5.2(a) Gear pump

8.5.2.2 Rotor Pump

Rotor pump is similar to the gear type pump. But in this pump two rotors are present instead of gears. These two rotors are attached to the inner side. One of the rotors is called inner rotor and the other called as outer rotor. The inner rotor rotates inside the outer rotor. The outer rotor has one lobe more than that of the inner rotor. The rotating arrangement of the rotors in this pump varies. So the size of the gap in between the two rotors varies. Inner shaft is rotated by attaching to the skew shaft of the cam shaft through the distributor extension shaft. Hence both the rotors rotate. Because of opposite rotation of the two rotors, inner side of the pump creates vacuum. Due to the vacuum pressure, the oil in the sump is forced to enter into the empty space. The oil attains high pressure of about 2 kg/cm^2 to 5 kg/cm^2 at the pump and comes out via the outlet port. Figure 8.5.2(b) shows the view of a rotor pump

1. This pump has 25% more power than gear pump and the construction is very simple.
2. For every rotation as less number of lobs is meshing it is noise free operation.

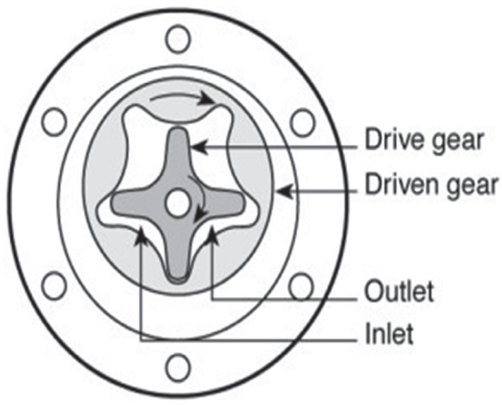

Figure 8.5.2(b) Rotor pump

AM_Unit_08.indd 167 12/20/2019 5:32:51 PM

8.5.2.3 *Plunger Pump*

This pump consists of the essential components such as barrel, plunger and two one way spring loaded ball valves etc., The plunger is designed to operate in reciprocating motion inside the barrel. Power required to drive the pump is drawn from the eccentric disc coupled with the cam shaft or by means of a small connecting rod coupled with the crank shaft of the engine. Among the two spring loaded ball valves in the pump, one is connected to the inlet of the barrel whereas the other one is connected to the outlet of the barrel. The figure 8.5.2(c) shows the view of a plunger type oil pump.

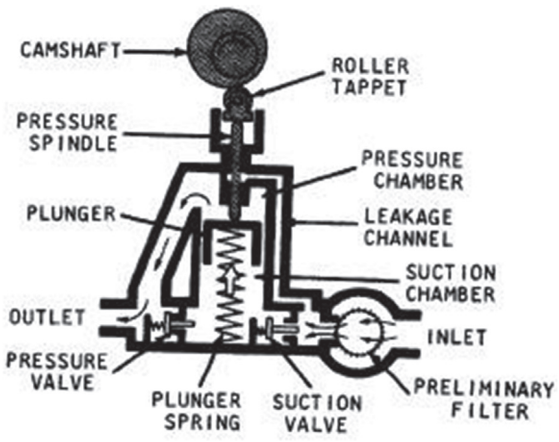

Figure 8.5.2(c) plunger pump

When plunger moves in the upward direction, a partial vacuum is created in the bottom portion of the plunger. So the inlet valve is opened and the oil is sucked and allowed to occupy the vacuum portion. When the plunger moves in downward direction the oil pressure gets increased in the barrel. Now the outlet valve is opened and inlet valve is closed. So the pressurized oil in the pressure chamber is expelled out through the outlet valve. This type of pump is generally not used in automobiles as it does not produce enough amount of pressure. This type of pump is used in stationary oil engines and in few automobile engines.

8.5.2.4 *Vane Pump*

This type of pump has a circular housing. Inside which an eccentric motor is present. The rotor shaft is connected to a skew gear. Surface of the rotor has equally spaced slots, which has many vanes connected. This vanes move to and fro in the slots. Two rings are placed at the center so that the vanes are kept close to the housing. Figure 8.5.2(d) shows the arrangement of the van pump.

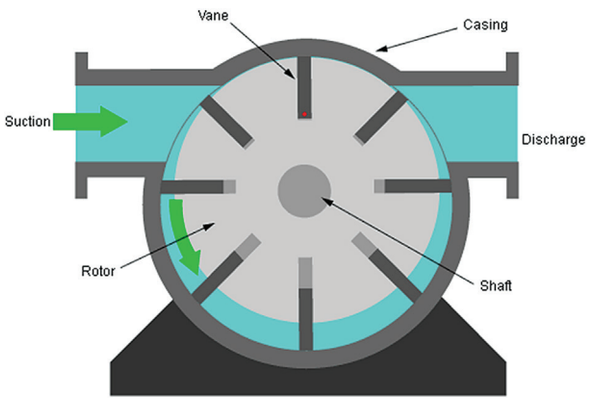

Figure 8.5.2(d) Vane Pump

When the pump is started the shaft rotates and due to the centripetal force vanes are forced outwards. Due to which oil enters into the casing through the inlet. Now the vanes move in the small space between the housing and eccentric rotors. When the vanes move again to the same place the oil in that place moves out through the outlet.

8.6 PRESSURE RELIEF VALVE

The oil pump is designed in such a way to send the fixed amount of oil when

AM_Unit_08.indd 168 12/20/2019 5:32:51 PM

the engine runs at the idling speed. So that when the engine speed gets raised, pump speed also get raised and sends oil with high pressure. This causes more oil to get wasted if the oil seals and joints are damaged. To avoid this, pressure relief valve is fixed in this pump. This valve releases the excess pressure developed inside the pump. The following are the different types of pressure relief valves used in automobiles.

Based on design it is classified into two types they are

1. Ball type pressure relief valve
2. Plunger type pressure relief valve

8.6.1 Ball Type Pressure Relief Valve

In this type a ball valve, spring and adjustment screw are present. The ball valve will be placed in its seat supported with a spring. All these above components are placed inside the pump housing. The figure 8.6.1 shows the view of the ball type pressure relief valve.

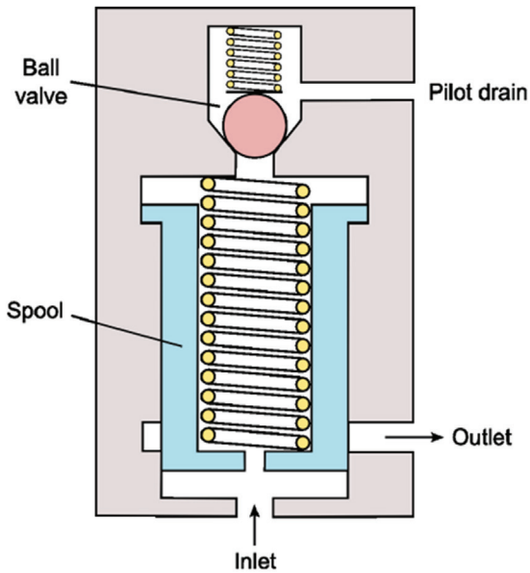

Figure 8.6.1 Ball Type Pressure Relief Valve

Working:

When the engine is off, the spring forces the ball to seat on its seat tightly. When the engine is started, based on the oil pressure and the spring tension the ball value will be in the opened or closed position. When the engine speed is increased, the pressure of oil is also increased. The increased pressure once if it reaches the fixed level, it presses the spring so that it moves the ball from the seat and releases the pressure and the excess oil reaches the inlet via bypass or to the oil sump.

Adjusting Screw And Lock Nut:

Adjusting screw is used to maintain the required level of pressure. If the screw is tuned inwards it increases the spring tension and allows more pressure to open the ball valve. If the screw is tuned outwards it reduces the spring tension and makes the pressure of oil to open the ball valve easily. Normally for the engines when runs at 1000 rpm at 43 degree Celsius the spring tension will be of 2.5 kg/cm^2.

8.6.2 Plunger Type Pressure Relief Valve

It is similar to the ball type valve but has a plunger, spring and adjustment shims. The plunger is placed on the seat with the help of the spring tension (Fig 8.6.2).

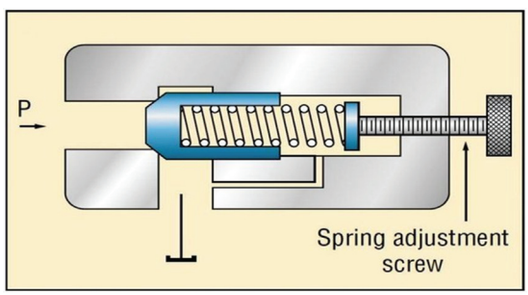

Figure 8.6.2 Plunger Type Pressure Relief Valve

AM_Unit_08.indd 169 12/20/2019 5:32:51 PM

When the engine is off, the spring makes the plunger to sit on the seat. Once the engine is started, depending on the pressure and spring tension, spring will open or close the path by moving the plunger. When the engine speeds up, the oil pressure also increases and if the increasing pressure level reaches beyond the fixer level the spring presses the plunger from its seat so that the extra oil will reach the inlet via bypass or reaches the oil sump.

With the help of the adjusting shim and lock nut the tension of the spring can be adjusted. By adding or removing the shim the spring tension is increased or decreased

Oil Dipstick or Oil Level Indicator:

Oil dipstick is used to measure the oil level in the oil sump. A cap is placed at the top and the Steel rod or a blade is placed at the bottom. This rod will have two Limits as maximum and minimum level lines. Apart from this many small graduations are drawn below the minimum level line; oil should be maintained above minimum level line.

The dip stick is inserted through the engine block into the oil sump. Before starting the engine the dipstick has to be taken out and checked for the oil level and should be seen that the oil level should not go below the minimum level. Lubricating failures and reason for failures have to be taken in care for proper maintenance of the engine

8.7 FAILURES IN LUBRICATING SYSTEM

Following are the some of the failures in lubricating system

1. Low engine oil level
2. Interior cracks
3. Poor lubrication efficiency
4. Blockage of filters
5. Impurities in the Engine oil

8.8 REASONS FOR FAILURE IN LUBRICATING SYSTEM

There are many reasons for failures of lubricating system

1. Internal and external leakage of oil leads to reduced oil level
2. Low pressure in oil, the oil pump may get damaged
3. Failure of oil pump belt or chain
4. Blockage in filter or bend in pipe
5. More blocks in oil filter
6. Damaged compounds
7. Broken or burnt gasket
8. Broken or worn out Piston rings

8.9 METHODS TO TROUBLESHOOT

1. By correcting the oil leakage
2. By changing the gaskets in oil sump
3. By changing the head gasket
4. By changing the paper gasket cover
5. By changing the drain block
6. By changing the piston rings
7. By maintaining the correct oil level

Student Activity

1. Students should visit the nearby workshops to study the process of engine lubrication system.
2. Students should dismantle any on of the lubrication system and sketch the complete system and then describe their function in detail.

AM_Unit_08.indd 170 12/20/2019 5:32:52 PM

Glossary

Solid Lubricant	-	திடநிலை உயவு பொருள்
Liquid Lubricant	-	திரவநிலை உயவு பொருள்
Fluidity	-	உயவு திரவம் படர் நிலை
Flash Point	-	வெடிப்பு நிலை
Fire Point	-	எரிதல் நிலை
Corrosion	-	துருப்பிடித்தல் / அரித்தல்
Foaming	-	நுரைத்தல்
Animal Oil	-	விலங்கு உயவு எண்ணெய்
Vegetable Oil	-	தாவர உயவு எண்ணெய்
Mineral Oil	-	தாது பொருள் உயவு எண்ணெய்

References

1. Rajput R.K. Internal Combustion Engines, Laxmi Publications (P) Ltd, 2006.
2. Ganesan V." Internal Combustion Engines, Third Edition, Tata McGraw - Hill,2007.
3. Duffy Smith, Auto Fuel Systems, Good Heart Wilcox Company Inc., Publishers, 1987.
4. Eric Chowanietz, Automobile Electronics, SAE International, 1995.
5. Internal Combustion Engine Handbook: Basics, Components, Systems and Perpectives, Richard Van Basshuysen and Fred Schafer (Editors) SAE International USA and Siemes VDO Automotive, Germany, 2002.

Webliography

1. https://en.wikipedia.org/wiki/Automatic_lubrication_system
2. http://www.lubrita.com/news/78/671/How-The-Lubrication-System-Works-In-An-Engine/
3. https://www.youtube.com/watch?v=mmmcj53TNic
4. https://www.grc.nasa.gov/www/k-12/airplane/lubesys.html
5. http://www.machinerylubrication.com/Read/28819/engine-lubrication
6. https://schoolworkhelper.net/car-oil-lubrication-system-overview/

AM_Unit_08.indd 171 12/20/2019 5:32:52 PM

SAMPLE QUESTIONS

Choose the correct answer

1. The oil pressure level of outlet oil in the oil pump?
   a) 2kg/cm^2 to 4 kg/cm^2
   b) 3kg/cm^2 to 4 kg/cm^2
   c) 5kg/cm^2 to 7kg/cm^2
2. Types of lubrication methods in engine.
   a) 2
   b) 3
   c) 4
3. Which lubrication system is mostly used in now a days?
   a) Petroil system
   b)Pressure lubrication system
   c) Splash system
4. The outlet oil from the oil pump is goes to.
   a) Main gallery
   b) Main bearing
   c) Oil filter
5. How many types of lubricants in the engine?
   a) 2
   b) 3
   c) 4

Answer the following questions

1. What is the necessity of the lubrication?
2. What are the properties of a Lubrication oil?
3. What is meant by S.A.E.?
4. What is meant by Fluidity?
5. What is meant by Volatility?
6. What is meant by Viscosity?
7. What is meant by Flash point?
8. What is meant by Foaming?
9. What are the types of the lubricant?
10. What are the solid lubricants?
11. What are the liquid lubricants?
12. What are the types of the lubrication system?
13. What are the different parts in the lubrication system?
14. What are the types of filters?
15. What are the types of oil pump?
16. Explain the working of any one type of the Oil pump with a sketch.
17. Mention any five types of troubles in the lubrication system and rectify them.
18. Explain the defects and remedies in the lubrication system.

AM_Unit_08.indd 172 12/20/2019 5:32:52 PM

Unit 9 Fuel Supply System

Contents

9.0 Introduction
9.1 Fuel Supply System in Petrol Engine
9.2 Types of Fuel Supply System
- 9.2.1 Gravity System
- 9.2.2 Vacuum Feed System
- 9.2.3 Pump System
- 9.2.4 Injection System

9.3 Fuel Supply System Components (Petrol Engine)
- 9.3.1 Petrol Pump
  - 9.3.1.1 AC Mechanical Petrol Pump
  - 9.3.1.2 SU Electrical Fuel Pump

9.4 Air Fuel Ratio
- 9.4.1 Rich Mixture
- 9.4.2 Chemically Correct (or) Stoichiometeric Mixture
- 9.4.3 Lean Mixture

9.5 Carburettor
- 9.5.1 Function of Carburettor
- 9.5.2 Requirements of Carburettor
- 9.5.3 Types of Carburettor
  - 9.5.3.1 Down Draught Carburettor
  - 9.5.3.2 Up Draught Carburettor
  - 9.5.3.3 Side Draught Carburettor
- 9.5.4 Simple Carburettor
- 9.5.5 Solex Carburettor

9.6 Petrol Injection
- 9.6.1 Advantages of Petrol Injection Technique
- 9.6.2 Types of Petrol Injection

9.7 Comparison Between MPFI and Carburettor
9.8 Method of Fuel Supply (Diesel Engine)
9.9 Fuel Injection Pump
- 9.9.1 Inline (Jerk Type) Pump
- 9.9.2 Distributor Pump

9.10 Governor
- 9.10.1 Governor Terminologies

9.11 Diesel Knock
- 9.11.1 Reasons for Diesel Knock

9.12 Common Rail Direct Injection
- 9.12.1 Advantage of CRDI System

19RZQ

AM_Unit_09.indd 173 31-01-2019 18:02:25

Learning Objectives

- To learn the process of fuel filling in self-propelled vehicles.
- To learn about important components like carburettor, pump, etc.

9.0 INTRODUCTION

In this chapter we study about the Fuel injection system (types, parts)-Air fuel ratio-Carburettor- types (simple, solex) and Types of Diesel engines pump, Types of Governors, Advance mechanisms, Reasons for knocking (measures to control knocking), Injector and Different types of fuel supply system i.e DTSI, CCTI, VT, PGMFI, MPFI. Fig 9.0 shows the general layout of Fuel Supply System.

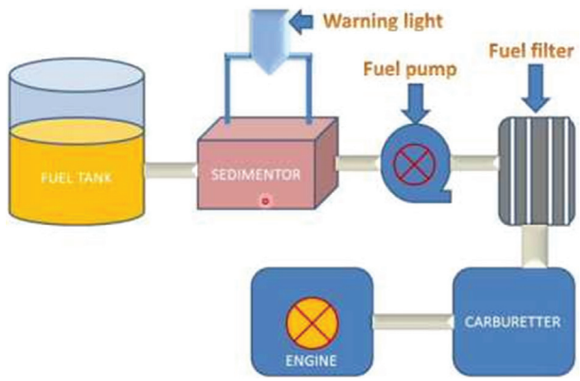

Figure 9.0 Fuel Supply System

9.1 FUEL SUPPLY SYSTEM IN PETROL ENGINE

The petrol from the petrol tank and the air from the air filter is mixed completely in correct ratio in order to make the fuel burn completely (stoichiometric air fuel ratio). The mixed fuel is sent in to the engine cylinder continuously according to the speed, load and torque of the engine in exact pressure.

Fig 9.0 shows the general layout of Fuel Supply System in Petrol Engine.

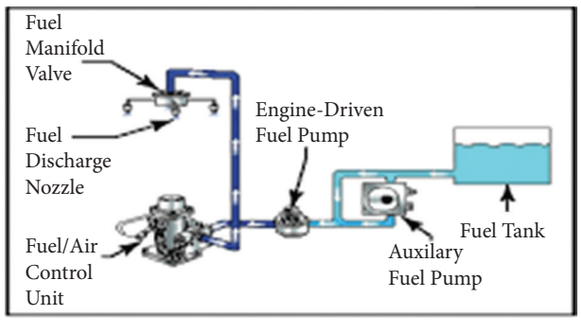

Figure 9.1 Fuel Supply System in Petrol Engine

9.2 TYPES OF FUEL SUPPLY SYSTEM

1. Gravity system
2. Vacuum feed system
3. Pump system
4. Injection system

9.2.1 Gravity System

In this method the petrol tank is kept just above the engine setup. So that the petrol in the tank reaches the Carburettor due to the gravity force. The air from the air filter and the petrol from the tank mixes and supplied in to the inlet manifold of the engine. This methods are commonly used in two wheelers like moped, scooter and motorcycles. This method can't be used in multi cylinder and heavy duty engines because as it has to be placed near the

AM_Unit_09.indd 174 31-01-2019 18:02:25

fuel tank there is the possibility of catching fire. Fig 9.2.1 shows the Gravity System.

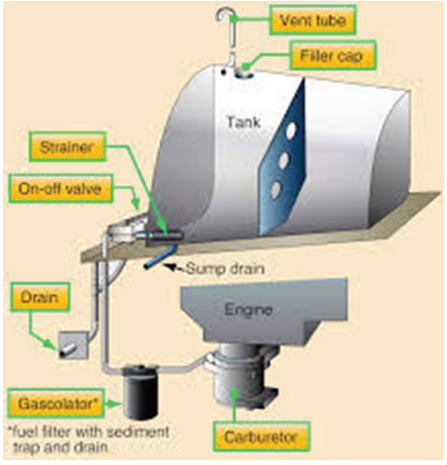

Figure 9.2.1 Gravity System

9.2.2 Vacuum Feed System

This method is actuated by the Vacuum in the engine. The vacuum created in the inlet manifold sucks the petrol from the tank and saved in the small substitute tank from there it is sent to the Carburettor by gravity method. But this method is not used in engine now a days.

9.2.3 Pump System

In this method the petrol from the tank is pumped by a pump. The pump may be mechanically or electrically actuated. In this method the tank can be fixed at any place in the engine and the pump can pump the fuel from the tank. So it is not necessary that the engine should be placed below the petrol tank as in the two former methods. The fuel can be supplied continuously even in any level. There is no chance of catching fire. So that all the vehicle now a days use this method only.

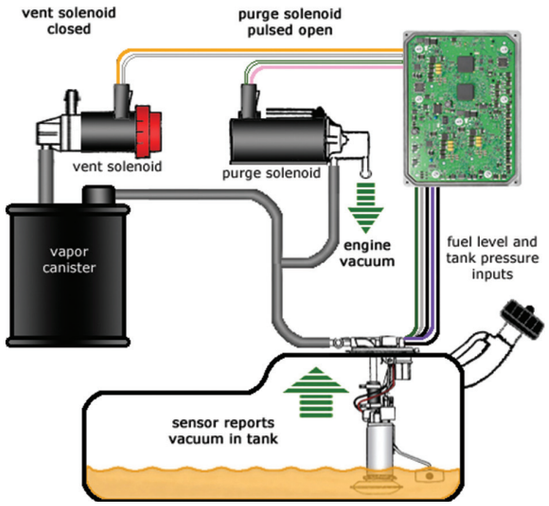

Figure 9.2.3 Pump system



What is Direct injection system?

- In a direct injection engine, the fuel skips the waiting period it would have to endure inside a standard engine and proceeds straight to the combustion chamber.
- It was used mainly during World War II in aero-engines such as the Junkers Jumo 210, the Daimler-Benz DB 601 and BMW 801.
- With gasoline engine it needs fuel, air (oxygen) and spark in order to operate.

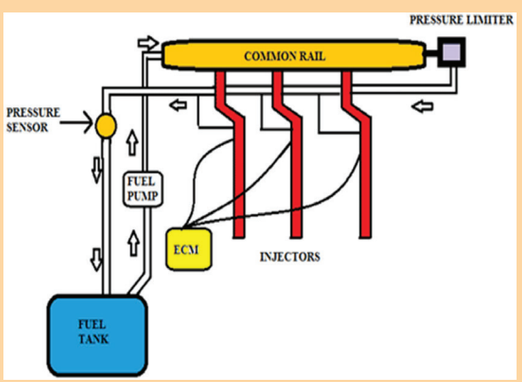

AM_Unit_09.indd 175 31-01-2019 18:02:26

9.2.4 Injection System

In this method the atomized fuel(petrol) is injected into the compressed air. So it is called as injection type. The diesel injectors are being done in this method only. Any how technology development in new vehicles as like diesel engine, the petrol is being injected in the petrol engine with the help of electronic circuits. Fig 9.2.4 shows the Injection System.

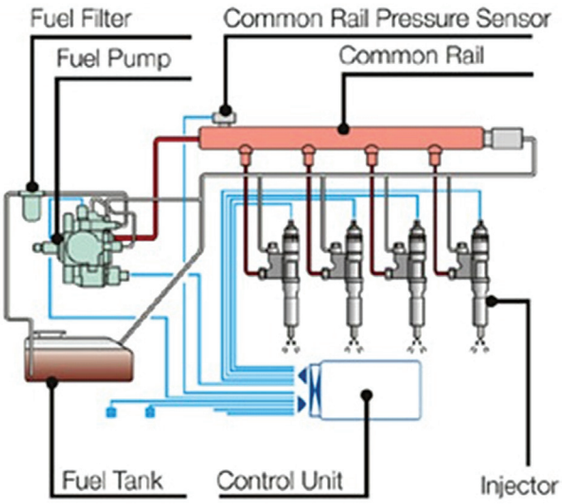

Figure 9.2.4 Injection system

9.3 FUEL SUPPLY SYSTEM COMPONENTS (PETROL ENGINE)

Now a days pump system only used in petrol engine. So the components used for that system can be clearly explained as follows,

1. Petrol Tank
2. Fuel Petrol Filter
3. Air Filter
4. Fuel Petrol Pump
5. Carburettor
6. Fuel Gauge
7. Inlet Manifold



Petrol Tank



Petrol Filter



Air Filter

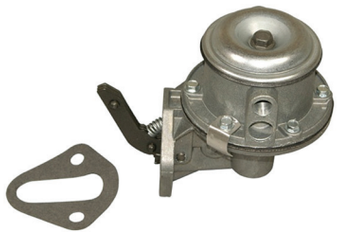

A.C. Mechanical Fuel Pump



Carburettor



Fuel Gauge



Inlet Manifold

Figure 9.3 Components of Fuel Supply System

In the above said components petrol tank, petrol filter, air filter and inlet manifold are clearly explained in earlier chapter. So that petrol pump, Carburettor, fuel gauge can be seen clearly.

AM_Unit_09.indd 176 31-01-2019 18:02:27

DO YOU KNOW? Carburettor?

- The first carburettor was invented by Samuel Morey in 1826.
- A carburettor meters out and mixes fuel with air for a proper combustible mixture.
- carburettors last longer than fuel injection systems and are favoured in motor sports.



9.3.1 Fuel Petrol Pump

The work of the petrol pump is to suck the petrol from the petrol tank with pressure and send it to Carburettor. Generally by the way of working it can be classified in to the types. They are,

1. AC mechanical petrol pump
2. SU Electrical petrol pump

9.3.1.1 AC mechanical petrol pump

The power required to drive the pump is taken from the eccentric in the cam shaft. So it is placed near cam shaft in cylinder block. When the engine starts the crank shaft starts to rotate. The cam shaft is actuated by the timing gear connected to it. The eccentric in the cam shaft operates the rocker arm in the pump. As the rocker arm moves upwards the diaphragm to it pushes the pull rod downwards. At that time the Vacuum is created in the pump chamber and the inlet value is being opened as a result. By which the petrol is being sucked in at this time the outlet valve is at clocked stage.

As the cam shaft further rotates the rocker arm is released from the eccentric pressure. So that with the help of the spring the pull rod moves the diaphragm to older stage. As a result the petrol in the pump chamber pressed out of the outlet valve and reaches floating chamber.

When the float chamber in the carburettor is filled with petrol, the needle valve closes the inlet path. So that the petrol can't come out of the outlet valve. So that the pressure is raised inside the pump chamber and the pressure makes the diaphragm and pull rod to stay down itself. At that time even the pull rod won't be actuated as a result the petrol won't come out of petrol chamber.

By this condition, the engine continuous to rotate the petrol is being supplied so that the petrol in the float chamber gets reduced and the needle valve is being opened, which makes the fuel to come out from the tank. So that the pressure in the pump gets reduced and starts to work as earlier. So that all operating conditions of engine the pump works smoothly

AM_Unit_09.indd 177 31-01-2019 18:02:27

and supplies needed fuel. The petrol pressure exerted from the mechanical type is directly proportional to the spring in the diaphragm.

Usually in the mechanical petrol pump the pressure in the petrol depends on the tension in the spring of the diaphragm. Generally the pressure of the petrol coming out from the petrol will be in the range of 1 kg/cm^2. Fig 9.3.1.1 shows the diagram of A.C. Mechanical Fuel Pump.

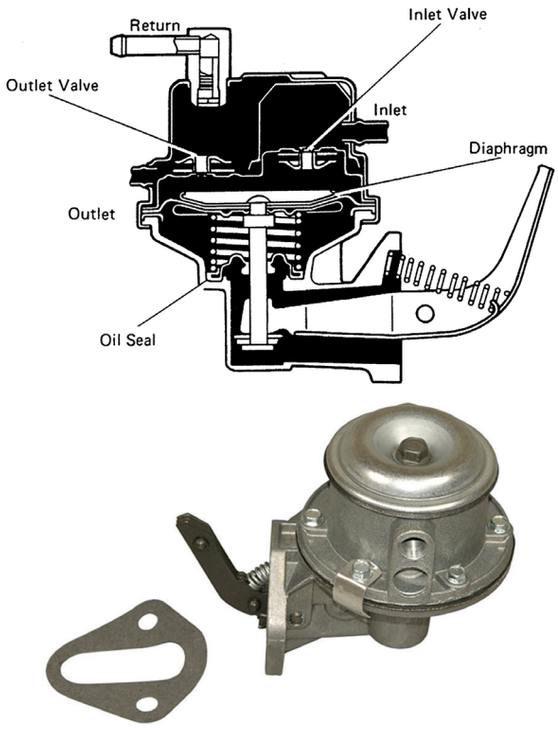

Figure 9.3.1.1 AC Mechanical Petrol Pump

9.3.1.2 SU Electrical fuel pump

As like the AC mechanical petrol pump SU electrical petrol pump also will be actuated by the diaphragm action. But in this pump, electricity is used to move the diaphragm up and down instead of eccentric. When the driver switch ON the ignition, the electricity is passed from the battery to the solenoid winding due to that the solenoid windings get demagnetised. Due to which the armature in the diaphragm moves upward. So that Vacuum is being created in pump chamber, by that time the suction valve gets opened and petrol sucked inside. At this stage, the armature moves upwards and the breaker point moves away and the electricity is disconnected. Then, by the spring action the diaphragm moves to the original position due to which the petrol in the pump chamber comes out by outlet valve and reaches float chamber in carburettor. If the fuel in the float chamber is full then the needle valve closes the inlet valve due to this the high pressure in pump chamber the spring restrict the action of diaphragm. When the level of fuel in the float chamber is reduced the needle valve gets opened and fuel (petrol) from the pump gets in as before. Fig 9.3.1.2 shows the diagram of S.U. Electrical Fuel Pump.



Figure 9.3.1.2 SU Electrical Fuel Pump

9.4 AIR FUEL RATIO (AFR)

For the various load and speed of the engine, the air and fuel should be mixed and supplied in the required manner with

AM_Unit_09.indd 178 31-01-2019 18:02:28

the help of the carburettor and sent into the engine. The air-fuel ratio won't be same for all the time. It should be varied in different ratio according to the needs. For example (i)starting, (ii)slow speed, (iii)idling, (iv) ordinary speed, (v)high speed, (vi)cold or hot climate starting engine are the conditions at which the air-fuel ratio is to be varied and can be varied by three stages. Namely,

- Rich mixture
- Chemically correct (or) stoichiometric mixture
- Lean mixture

9.4.1 Rich Mixture

To burn 1 kg of fuel petrol completely, nearly 15 kg of air is being supplied. If the fuel in the air-fuel mixture is 1kg and air is 15kg it is said to be rich mixture.

Example, 10:1 (10 % air and 1 % fuel). Form the example, the mixture has high burning capacity. At the below given conditions the engine needs rich mixture.

- During starting (A:F = 5:1)
- Idling (A:F=10:1)
- While overtaking (A:F =12:1)

9.4.2 Chemically Correct (or) Stoichiometric Mixture

In the air-fuel mixture if the air is more and petrol is less, then it is called Chemically correct (or) stoichiometric mixture.

Example, 16:1 (16 % of air and 1% of fuel)

In normal and ordinary speed the engine is being operated at normal mixture.

9.4.3 Lean Mixture

If the fuel exceeds beyond the stoichiometric limit, then it is called lean mixture. Example: (18:1). The vehicle will operates at lean mixture in case of low load and high speed.

9.5 CARBURETTOR



The carburettor is the important component in the petrol engine. It makes the liquid form of petrol in to vapour form and mixes it with required amount of air and sends into the cylinder. It also atomises the fuel for easy mixing with air. This process is called carburetion.

9.5.1 Function of Carburettor

1. It stores the required amount of petrol in the float chamber
2. It vaporizes the fuel and mixes with air
3. Carburetion is done as per engine load and speed
4. Rich mixture is supplied to engine during starting and high speed conditions
5. When the engine is at idling stage it mixes less amount of fuel to the air and sends to the engine
6. According to the load and speed of the engine the air-fuel mixture is sent to the engine.

9.5.2 Requirements of Carburettor

1. For the required engine and load the air-fuel mixture should be mixed correctly and sent it to the engine cylinder.
2. During cooling and heating conditions, carburettor should able to start the engine easily.

AM_Unit_09.indd 179 31-01-2019 18:02:28

3. It should not affect the fuel economy
4. Screw arrangement should be made properly for the various speed and load of the engine

9.5.3 Types of Carburettor

Carburettor can be classified as follows

9.5.3.1 Down draught carburettor

(I) In this type of carburettor the air would come from induction manifold to downward direction due to gravitational force. It will be placed above the induction manifold. Most of the vehicles use the down draught type carburettor. The fig 9.5.3 shows the down draught carburettor.

9.5.3.2 Up draught carburettor

In this type, air-fuel mixture goes from bottom to top of the induction manifold. The fig 9.5.3 shows the up draught carburettor.

9.5.3.3 Side draught carburettor

In this type, air-fuel mixture goes from one side to another side way. This is placed side of the induction manifold. Figure 9.5.3 shows various types of Carburettor.

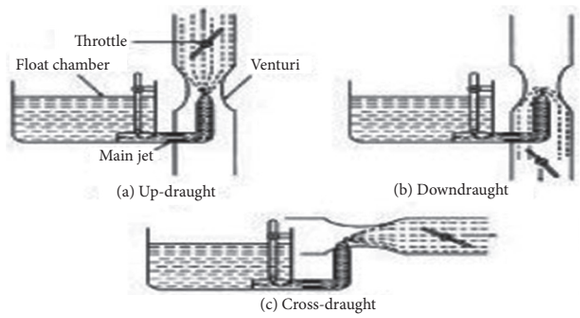

Figure 9.5.3 Various Types of Carburettor

Semi down draught carburettor:

This type of carburettor is the combination of down draught and side draught carburettor .in this type petrol-air mixture will be slightly slanting position.

(II) According to working of carburettor,

a) Constant choke carburettor:

In this type by keeping the area of the orifice constant and changing the pressure using venturi, carter, solex and zenith are the types coming under constant choke carburettor

b) Constant Vacuum carburettor:

By changing the area of orifice and keeping pressure as constant. This type of carburettor is called constant Vacuum carburettor comes under this type.

(III) According to number of barrel,

1. Single barrel carburettor:

Generally in four cylinder engines single barrel carburettor is being used. it contains only one barrel along with fuel jet, venturi, choke valve and the throttle valve.

2. Dual or multi barrel carburettor:

In this each barrel has the separate parts that are associated with the system. For each barrels there will be a separate connection to inlet manifold. This type of carburettor mixes the air fuel ratio uniformly.

9.5.4 Simple Carburettor

Without any of the advanced technologies in the system supplies the air

AM_Unit_09.indd 180 31-01-2019 18:02:28

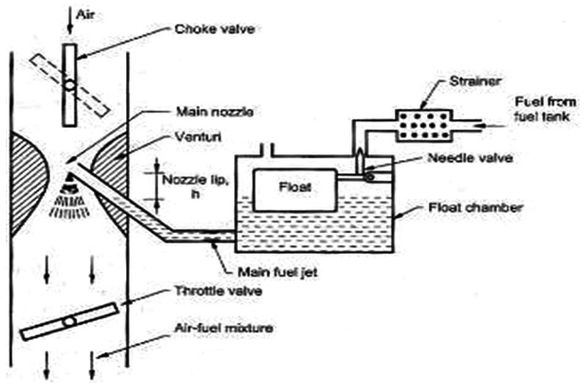

Figure 9.5.4 Simple Carburettor

fuel (petrol) ratio correctly according to the load and speed of the engine in a carburettor works it can be called as simple carburettor. Figure 9.5.4 shows the Simple Carburettor.

The parts of simple carburettor

1) Float chamber
2) venture (or) choke tube
3) main jet
4) choke valve
5) throttle valve

Working:

In float chamber there be a float and a needle valve, usually the float will be thin copper plate or plastic material of less weight and it will be made such that there will be Vacuum inside.

The inlet petrol from the fuel pump will be attached to the top position of the float chamber. So that when the petrol comes into the float chamber when it reaches the certain level the float moves upwards. When the float chamber is full the need valve in the float block the petrol line. Like the same way when the petrol level reaches down the float comes down and allows petrol to come in. so that the level is maintained inside the chamber always.

The level of the petrol in the float chamber will be 5mm less than needle height. So that when the engine at rest and while climbing hills it won't allow petrol to over flow in the mixing chamber.

To control the amount of air fuel mixture from the carburettor to the engine, there will be throttle valve in the carburettor. This valve will be connected to the accelerator cable with suitable arrangements. So that when the driver presses the accelerator pedal the amount of air fuel mixture goes inside the engine accordingly.

During the suction stroke of the engine more air will be sucked inside via air filter. In the air flow passage there will be venture with convergent type. When the air crosses the venture the pressure reduces and speed is increased around the main nozzle. So that when the petrol enters the nozzle with less pressure it can be vaporized easily and mixes with the air. It crosses the throttle valve inlet manifold and inlet valve and reaches the engine cylinder.

In cold climate when engine is started the choke valve is being closed using the choke cable. So that the air flow passage is closed for some time at that time the petrol and less amount of air in the mixing chamber and enters the nozzle as rich mixture. So that it will be easy to start engine as petrol high and less air (rich mixture).

AM_Unit_09.indd 181 31-01-2019 18:02:28

Drawbacks of simple carburettor:

1. Starting difficulty:

To start the engine rich mixture is needed to the engine, but simple carburettor will supply only the lean mixture.

To supply rich mixture we need to use any of the following setup adjustable area jet (or) separate air passage.

2. Idling difficulty:

After the engine starts without the movement of the vehicle the engine alone working is a stage called "idling stage". To maintain the engine at idling stage the suction in the venturi is very less so that it can't take required amount of fuel from the main nozzle. So that there is difficulty to run engine in slow speed.

3. Running difficulty:

When the engine speed is high (or) getting slow, the simple carburettor won't work properly. So to avoid the running difficulty we need to adopt any one of the following methods.

1) Extra air compensation valve
2) Restrict air fuel compensation valve
3) Jet compensation valve
4) Main jet compensation valve.

4. Acceleration difficulty:

When the throttle valve opens suddenly more amount of air is sucked inside, so that there is a delay in petrol supply. So that the lean mixture will be supplied to the engine so the engine struggles at load. To compensate this acceleration pump is being used.

5. Weather difficulty:

If a carburettor is set in hot climate it will give lean mixture during cold climate. In the same way if it is set at cold climate it will give rich mixture during hot climate. To overcome this problem a climatic control device is being installed in advanced carburettors.

6. Icing difficulty:

The venturi part in the carburettor is the place where the petrol gets vaporized. So at that place the cold region is formed by removing hot region. So that at the cold climates and in hill regions the petrol in the carburettor gets freezes. To avoid this idling port and throttle regions of carburettor is heated using exhaust gas, also the hot water from the radiator is poured on to the carburetor which avoids petrol freezing.

7. Altitude difficulty:

At higher altitude regions the pressure will be less which makes air concentration very less. So that will give rich mixture to the engine. Some additional arrangements are made to supply lean mixture to the engine.

9.5.5 Solex Carburettor

To meet the fuel requirments of the different operating conditions of the engine in most of the transportation vehicles like petrol cars the solexcarburator is used. This is one of the down draft type carburetors. With respect to the engines speed and torque the fuel air mixture is prepared by this carburettor and sent through the intake manifold to the

AM_Unit_09.indd 182 31-01-2019 18:02:28

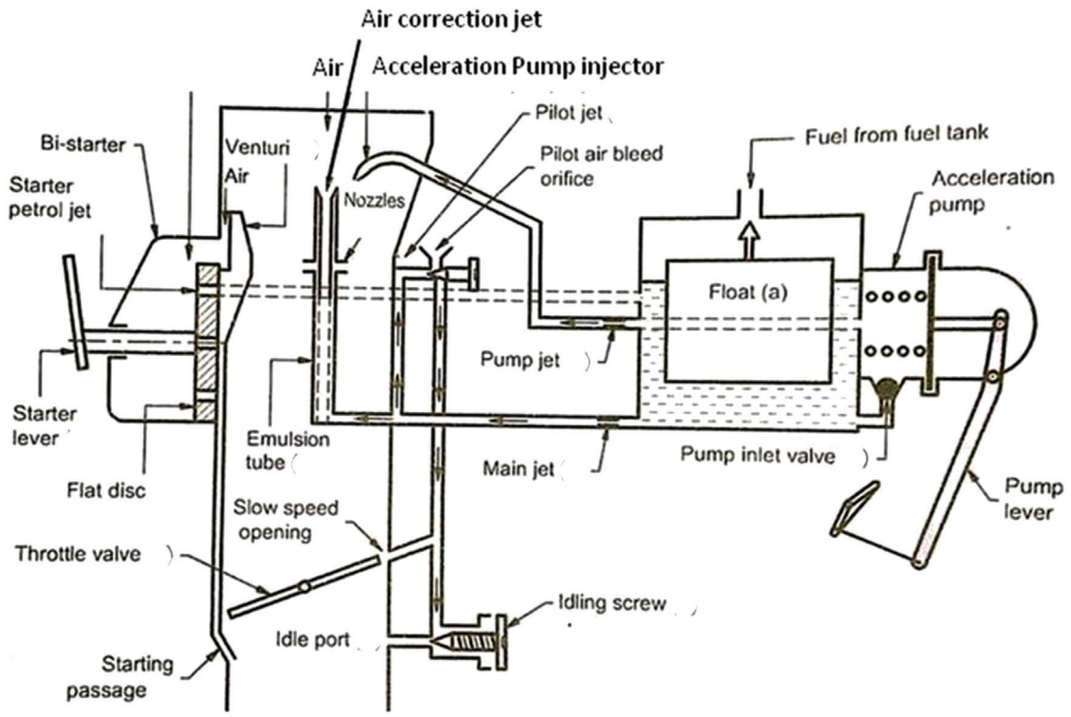

Figure 9.5.5 Schematic view of the Solex Carburettor

engine combustion chamber. The schematic view of the Solex carburettor can be seen in Fig. 9.5.5.

This carburetor has different additional circuits to be present for the complete operation of the engine. The important circuits are

1. Float circuit
2. Starting circuit
3. Idling and low speed circuit
4. Normal running circuit
5. Accelerating pump circuit

1) **Float circuit:** Float circuit is used for balancing or maintaining the fuel level uniformly in the carburetor with the help of needle valve placed above on the float. When the float moves down, the fuel (petrol) from the fuel tank automatically enters into the float chamber. If the petrol fuel level is increased inside the chamber then the float moves upward and the needle valve closes the fuel flow inlet path. By this way the float circuit maintains the petrol fuel level uniformly. Fig 9.5.5(a) shows the float circuit.

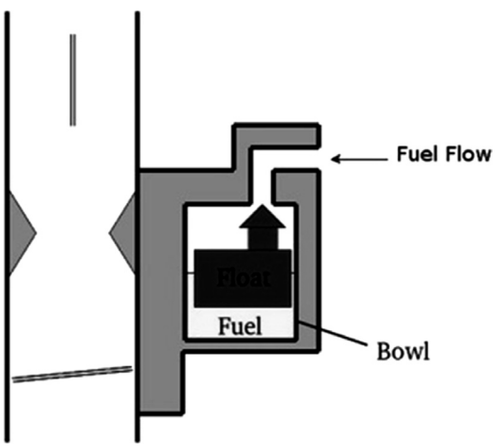

Fig.9.5.5(a) Float Circuit

2) **Starting circuit:** The bi-starter valve adapted in this circuit is actuated by using starter lever. It consists of two different sized holes.

AM_Unit_09.indd 183 31-01-2019 18:02:29

The required amount of rich mixture for starting the engine is given by the starting petrol jet. In the two holes presented in the starter valve one is connected with starter petrol jet and another hole is connected with the starting passage. While starting the engine, for sending rich mixture the bigger size hole in the starter valve is connected to the starting passage. Hence the amount of petrol fuel mixed with the air gets increased and results in formation of rich mixture and enters into the mixing chamber. After the engine is started the starter lever must come to the balanced state. Hence a small hole in the starter valve coupled with the petrol jet is closed and hence the level of petrol fuel is reduced. When the engine comes to its normal operation the startor lever is brought to its off position.

3) **Idling and low speed circuit:** During idling stage the engine will not be accelerated. So the venturi is completely closed by the throttle valve. Hence the vacuum created inside the intake manifold is passed to the idle port located below the throttle valve. Hence the petrol fuel from the idlejet is mixed with air which coming from air jet and finally the mixture is sent to the engine through idle port. Idling and low speed circuit can be seen in Fig 9.5.5(c) Idling and Low Speed Circuit.

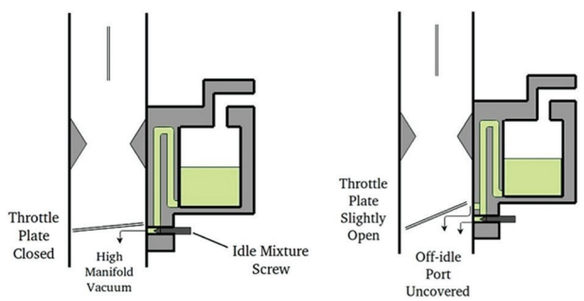

Fig.9.5.5(c) Idling and Low Speed Circuit

When driver accelerates the engine for moving the vehicle, the throttle valve gets opened slightly. Because of the above phenomenon vacuum inside the intake manifold is spreaded in to the idle port and slow speed opening. Hence the fuel coming from the petrol jet and air coming from the air jet are inducted to the engine through slow speed opening and idle port.

4) **Normal running circuit:** For increasing the engine speed driver presses the accelerator, at the time throttle valve gets opened further. Hence the required amount of petrol fuel needed for the engine is comes through the main jet and at the same time maximum amount of air is supplied to the venturi. The air is mixed with the petrol fuel and sent to the engine through the throttle valve.

5) **Acceleration circuit:** If the vehicle is to be accelerated the more fuel must be supplied with rich mixture condition for the engine operation. Acceleration pump in the acceleration circuit is used to perform the above process. Acceleration pump is connected to the accelerator pedal with linkages. The acceleration pump which consists of diaphragm coupled with a spring at one side and linkages on other side which is connected to the accelerator pedal. Petrol fuel is supplied from the float chamber to pump chamber with the help of ordinary pump connected in between the both chambers with pump valve.

By giving sudden acceleration to the accelerator pedal the diaphragm inside the pump will acts against its spring tension.

AM_Unit_09.indd 184 31-01-2019 18:02:29

When the diaphragm is stressed,the more amount of petrol fuel from the tank is injected to the engine through the venturi. When the driver released the accelerator pedal, diaphragm get relived from the stress and comes to its original position. Because of this a vacuum created inside the pump chamber will sucks petrol fuel and sent to the float chamber with help of pump valve. By this way pump get actuated automatically for the next process. Fig 9.5.5(e) shows the Acceleration Circuit

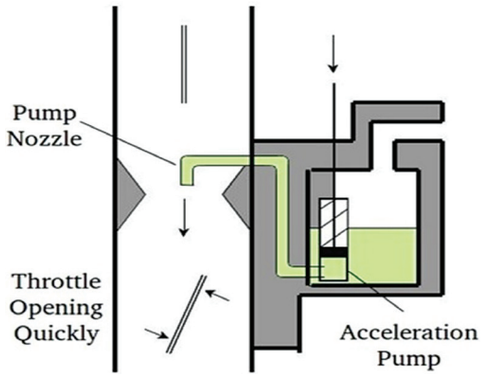

Fig.9.5.5(e) Acceleration Circuit

9.6 PETROL INJECTION

There are some disadvantages faced by sending air fuel mixture with carburation technique in petrol engines. For example, in multi cylinder engines the amount of air fuel mixture was varied from cylinder to cylinder. So at the slow speed engine could not attain steady state condition. Furthermore the energy produced from the each and every cylinder is getting varied. Hence engine vibrates more. So now days in petrol engines also direct injection of petrol is practiced.

Robert Bosch is a German engineer who introduced first time the concept of direct injection of petrol in the Mercedes racing cars. Comparably Petrol injection technique is completely varied from diesel injection. Petrol injection was made near to the intake manifold with minimum pressure in the injector whereas diesel injector operates with high pressure for injection.

9.6.1 Advantages of Petrol Injection technique

1. We can inject uniformly the air-fuel mixture with required amount to the each cylinder in the multi cylinder engine.
2. Increases in volumetric efficiency.
3. It reduces air-fuel mixture escapes from the exhaust during scavenging process.
4. Reduces knocking.
5. For all the speed and torque conditions, uniform amount of air fuel mixture can be supplied.

The following four parts are mainly used in petrol injection technique:

1) Pumping element – used for pumping petrol from tank
2) Metering element – it measures the petrol fuel quantity
3) Mixing element – it atomize the petrol fuel and tend to fine mix with air.
4) Distributing element – supplies petrol fuel to all the cylinders uniformly.

Electronic fuel injection system was established for the proper functioning of the engine. In this technique mechanical injector was replaced with electronic fuel injector with control valve.

The layout of electronic fuel injection system was shown in the fig. 9.6.

AM_Unit_09.indd 185 31-01-2019 18:02:29

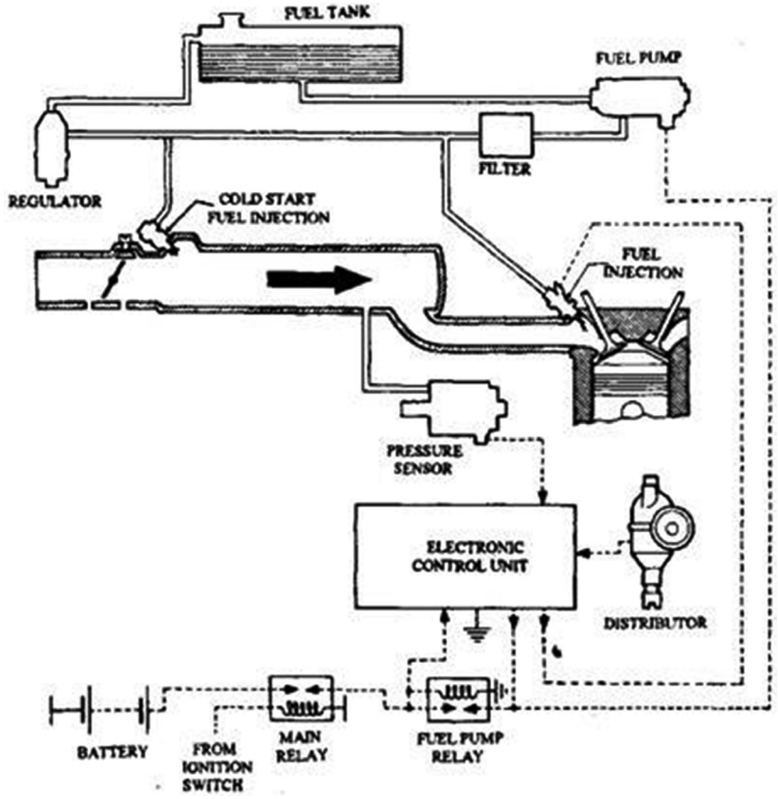

Figure 9.6 Layout of Electronic Fuel Injection System

In this fuel injection system electrically operated control valve with injection pump is introduced. This injection system receives petrol fuel from the fuel tank and injects at high pressure to the engine through metering distributor.

Inside the injector there is a solenoid which is operated under electrical supply with the help of electron control unit. ECU is a preprogrammed control unit with computer.

The injection of petrol fuel timing was given to the injector through the ECU with help of signals from the sensors. Meter valve receives the signal from the sensor and controls the solenoid for injecting petrol fuel in proper ratio in the each cylinder.

The signal quality received from the ECU shows need of some other purpose of the engines behaviour. To determine such behaviours so many sensors are introduced in to the engine. The behaviours are finally converted and send to the ECU. The required sources are air intake temperature, engine load, engine pressure, engine performance, air flow rate, engine coolant temperature, oxygen sensor, etc.,

9.6.2 Types of Petrol Injection

1) Direct injection
2) Single point or throttle body injection
3) Multi point or port injection
4) Timed and continuous fuel injection.

a) Combustion chamber injection (or) direct injection:

It will looks like diesel engine. In this type of injection, it was designed to inject petrol fuel directly to the engine cylinder.

AM_Unit_09.indd 186 31-01-2019 18:02:29

Here petrol fuel air mixture is not sent in to the cylinder through intake manifold and inlet valve. In case of that only air is inducted to cylinder through the intake manifold, whereas petrol fuel was directly injected in to the cylinder. Because of this engine consumes less fuel and produces higher performance. But presently this type of injection system was not in practice, because of some uncontrollable parameters such as exhaust smoke and petrol fuel consumption.

b) Single point or throttle body injection:

In this system injectors are placed at each and every throat in the throttle body. This injector injects and sprays the petrol fuel before the throttle valve in the air. This developed spray of fuel was sent to the intake manifold and mixed with the air. By this way air fuel mixture is sent to the intake port through the inlet manifold. Non-uniform rate of air fuel mixture, vaporization of petrol fuel in the intake manifold, pressure difference inside the manifold are some of the problems involved in this system.

c) Multi –point or port injection:

In this system a separate injector was mounted in to the each and every cylinders intake manifold line. This injector injects and sprays petrol fuel in to the air passage in the intake manifold. This process denotes multi point fuel injection system.

d) Timed and continuous fuel injection:

Injection was depends on timed control it denotes this timed fuel injection. Fuel injection occurs from the injector by fixed timing mode in this system. In continuous injection system fuel injection occurs continuously in to the manifold. The cost and handling in continuous injection system is low and easy compared to timed injection system. In this system more amount of fuel injects in to the intake manifold with low pressure. The injected fuel mixed with the air in the manifold and mixed to form flammable mixture before entering in to the intake port. Now this mixture is ready to inject in to each cylinder. These mixtures get in to the engine by the opening of each and every inlet valve respectively. Inside the cylinder these mixture get mixed more fine for attaining its ignition point. In timed injection system fuel get injected in to the manifold at particular duration given from the timed control unit. In this system by controlling the fuel supply, the consumption of petrol fuel gets controlled. This system looks like diesel injection system used in the diesel engine.

9.7 COMPARISON BETWEEN MPFI AND CARBURETTOR

The working principle of MPFI and Carburettor are mostly same. However, there are several methods are used to identify the amount of air required when sending fuel in to the engine

Carburettor:

When engine is running under idle or slow speed the throttle valve is in closed position, hence the amount of air inducted in to the engine was measured using the pressure difference occurred in the manifold surroundings. During normal running condition the Vacuum created inside the venturi is used to measure the amount of air supplied in to the engine

AM_Unit_09.indd 187 31-01-2019 18:02:29

MPFI:

In this system for injecting fuel we need to measure the amount of air inside the system. Electronic injection system consists of various devices. Air flow meter (sensor) is placed in the system for measuring the amount of air inducted and the signal is sent to the ECU. Then this ECU sends one signal to the injectors. By the method injectors injects fuel in uniform manner with the help of pump in to the each cylinder separately respective to the signal from the ECU.

Types of MPFI System:

Based on the amount of air inducted in to system MPFI classified in to two types

1. D-MPFI (manifold pressure control type)
2. L-MPFI (air flow control type)

D-MPFI

D-MPFI also called as a D-Jetronic. D-Jetronic is a german word comes from a word 'Druck' (pressure). In the type of system air flow rate is measure based on the Vacuum created inside the manifold. D-MPFI is mainly used in the engine which was controlled by the computer control system.

L-MPFI

L-MPPFI also called as L-Jetronics. The word L in the L-Jetronics is comes from the german word called 'Luft'. The meaning for 'Luft' is air. This L-MPFI system is mainly used in the electronic fuel injection (EFI) and Computer controlled system (CCS) adopted engines. In this type of system the air flow rate inside the manifold is measured using sensor called Air flow meter.

Basic parts of MPFI:

The MPFI are consists of three different parts:

1) Electronic Control System
2) Fuel System
3) Air Induction System

(i) MPFI – Electronic Control System

It consists various sensors like Air flow meters, Water temperature sensor, throttle position sensor, Intake Air Temperature sensors etc. The ECU system controls the injection duration of the injectors based on the signals received from the above sensors.

(ii) MPFI – Fuel System

It consists of Fuel Pump, fuel cold start injector, Timing and Injection signal control (ECU). The ECU system controls and defines the amount of fuel to be injected in to the manifold with the help of injector by receiving signals from the sensors.

(iii) MPFI – Air Induction System

It consists of Air cleaner, Air flow meter, Throttle body, Air valve, Air intake chamber, Intake manifold and cylinder. All this devices are used in the system is for supplying exact amount of air required for the complete combustion.

9.8 METHOD OF FUEL SUPPLY (DIESEL ENGINE)

In the present economic condition spending more money for buying fuel for the vehicles becomes a difficult one for the

AM_Unit_09.indd 188 31-01-2019 18:02:29

common people. Hence people prefer low cost fuel for the vehicles. Diesel is a low cost fuel than petrol and it has high thermal energy and pulling power. In this way when diesel is used as fuel the method of supplying the fuel and combusting it becomes different from using petrol in Otto cycle. In the diesel cycle based engines a separate fuel supply system is used for introducing fuel inside the combustion chamber of the engine. The fuel supply system of the diesel engine has the following components.

1. Fuel Tank
2. Primary (course) Fuel Filter
3. Fuel feed pump
4. Secondary (fine) fuel filter
5. Fuel Injection Pump
6. Fuel Injector or Nozzle

In the above components of the fuel supply system the fuel tank, fuel filter, fuel feed pump were already discussed in detail. Hence here the details of types of fuel injection pumps and their arrangements can be seen in detail.

9.9 FUEL INJECTION PUMPS

In any diesel engine for producing required power, specified amount of fuel at the specified pressure and at the specified time must be introduced inside the combustion chamber. The device used for achieving such operation is called as the fuel injection pump. If the fuel is injected in such high pressure inside combustion chamber which has the compressed air at very high temperature then the fuel will get auto ignited and the engine power will increase. The pumps used for such operation are classified into the following types.

1. In line or jerk type Pumps
2. Distributor pumps

9.9.1 Inline (Jerk type) Pump

When the fuel is supplied through the intake manifold by induction like carburetion due to wall wetting effect appropriate fuel will not be supplied to the individual cylinders. Due to this improper distribution of the fuel supply, individual cylinders produce varying power outputs in multi cylinder engines. This distribution of the fuel could be avoided by injecting the fuel by using separate injectors fitted at the individual cylinders of the engine. In multi cylinder engines when the appropriate amount of fuel is injected at the appropriate timings as per the firing order then the power variations can be eliminated. In multi cylinder engines the injectors are mounted at each cylinder of the engine and arranged in line and operated by individual injection pumps which are operated by a common cam shaft. These types of pumps are called as in line pumps. The injection pressure in such pumps can be increased from 7 Mpa (mega pascal) to 30 Mpa. In a diesel engine operating at 6000 rpm with 150 mm^3 quantity of the fuel will be injected 20 times. The In line pumps can be also called as jerk pumps.

Construction:

In an in line diesel pump plunger, barrel and delivery unit are the important components present. The plunger is kept inside the barrel in correct fit and allowed to move inside the plunger barrel up and down. Tooth quadrant provided on the barrel

AM_Unit_09.indd 189 31-01-2019 18:02:29

unit helps to operate the accelerator rod front and back. This arrangement is made in the fuel injection pump by using a spring arrangement. The cam shaft is present at the bottom of the fuel injection pump. When the cam shaft rotates the cam present in the shaft lifts the plunger unit of the pump. There are provisions made in the barrel to admit fuel and deliver the fuel. The helix present in the plunger in connection with the spil port is designed to suck the fuel and pressurise it. The delivery unit present in the pump at the top has the spring loaded delivery valve and the spring as a single unit. The schematic view of the in line pump can be seen in Fig 9.9.1 and the plunger control rack arrangement can be seen in Fig 9.9.1(a).

Operation:

The in line injection pump of the engine is operated by the timing gear. When the engine is started, the crank shaft is rotated and the power is transferred to the engine cam shaft. From the cam shaft the power goes to the fuel injection pump cam shaft through the timing chain. The plunger present in the fuel injection pump moves up and down due to the cam's rotation. When the plunger is moved down the fuel is sucked inside the barrel of the pump through the inlet port. This happens when the vertical slot is in connection with the spill port and the fuel enters into the pump barrel. To control the amount of fuel delivered to the injector the

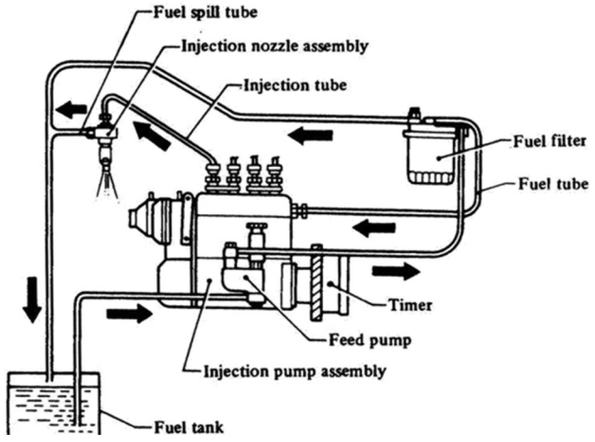

Figure 9.9.1 Schematic View of the In line Pump

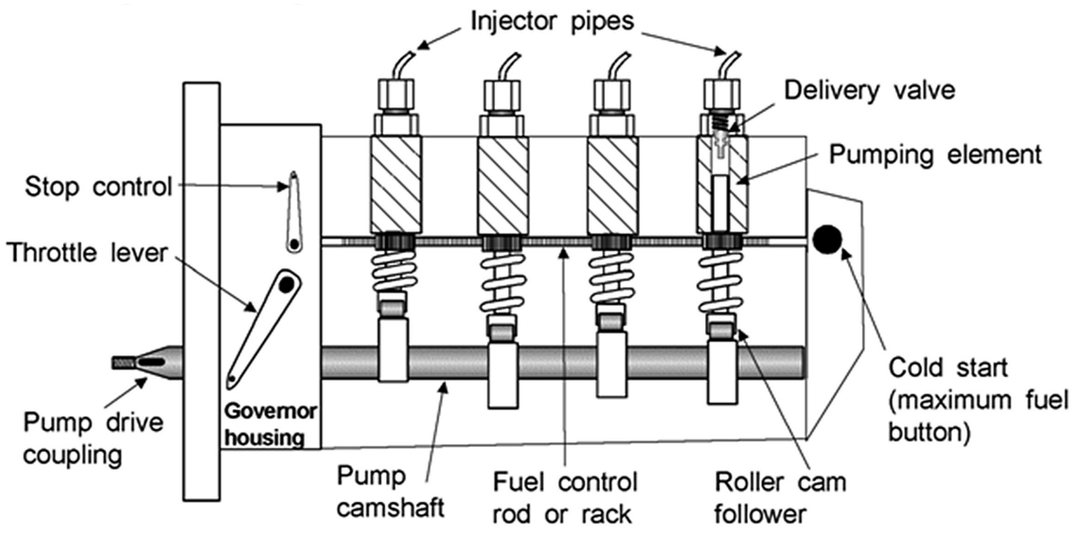

Figure 9.9.1(a) Control Rack and Plunger Arrangement

AM_Unit_09.indd 190 31-01-2019 18:02:29

Control rack in connection with the tooth quadrant present in barrel unit is used. By moving the control rack front or back the helix position in the plunger meeting the spill port is varied. When the plunger is moved up, the inlet and spill port are cut and hence the fuel is compressed inside the barrel and high pressure is developed in the pump. When sufficient pressure is attained the delivery valve opens and the pressurised fuel present in the pump is supplied to the respective injector as per the firing order and injected inside the combustion chamber.

9.9.2 Distributor Pumps

Use of individual pump and injector in individual cylinders of a multi cylinder engines leads to energy loss (due to the operation of the individual plungers in the pump) and more maintenance in diesel engines. Hence instead of the in line pump, a single unit arrangement can be used which could pressurise the fuel and supply it to the appropriate cylinders at the appropriate time. Such pump is called as the distributor pump. The power for the distributor pump is obtained from the gear present in the cam shaft.

Construction: The distributor pump has a sleeve, rotor, plunger and a delivery unit. Rotor is placed inside the sleeve to rotate and move up and down. For the diesel fuel to enter and leave ports are made in the sleeve. The port is called as the metering ports. The plunger unit is placed inside the rotor unit to operate. There is a gear placed at the bottom of the rotor. The delivery unit of the pump is kept at the top of the rotor. The view of the distributor pump can be seen in Fig 9.9.2.

Operation: Unlike the in line pump, the distributor pump is designed as a single unit in such a way to distribute the diesel fuel to all cylinders. In the rotor a long path is present to pass the fuel. This path is provided to supply the fuel to the individual cylinders depending on the rotation of the suction port. When the engine is started due to the rotors rotation and up and down movement the fuel entering inside the pump is compressed and hence the pressure of the fuel is raised. The pressurised fuel then reaches the delivery valve. From the delivery valve through the high pressure line fuel is supplied to the injectors as per the firing order and sprayed at high pressure. The fuel delivered from the pump is controlled by using a metering rod and the governor unit for controlling the engine's speed. To control and meter the fuel the metering rod and the governor unit are used. The governor unit is connected with the accelerator pedal of the vehicle.

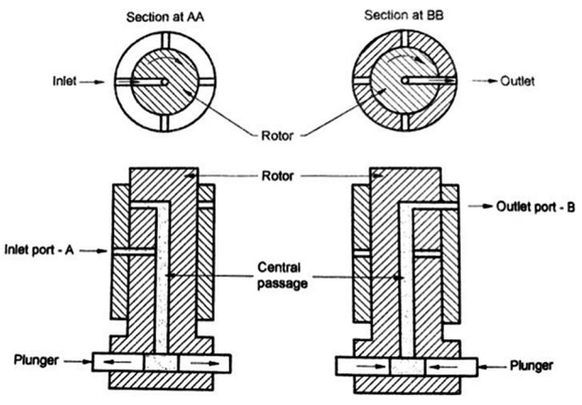

Fig.9.9.2 A view of the Distributor pump

9.10 GOVERNOR

Normally in petrol engines the carburettor unit mixes the air and fuel at correct proportions and supplies to the engine depending upon the engine's requirement. However, in diesel engine air and fuel are

AM_Unit_09.indd 191 31-01-2019 18:02:30

separately introduced inside the engine combustion chamber and then ignited. Hence for supplying the required amount of fuel (in diesel engine) or fuel air mixture (in petrol engines) depending upon the engine's speed and load governor unit is used. At all speeds and loads to operate the engine safely the governor has the following operation stages of operation,

1. Governor cut in speed
2. Governor cut out speed
3. Governor over run

Note:

Governor Cut in Speed: Governor cut in speed represents controlling the speed of the engine by using the control rack by moving the rack out and supplying the required amount of fuel to the engine.

Governor cut out speed: When the control rod is operated beyond the control speed the fuel supply is cut by the governor this is called as cut out speed.

Governor Over run: The difference between the governor cut in and cut out speeds is called as governor over run.

9.10.1 Governor Terminologies

Based on the working principle governors can be classified into three types. They are

1. Mechanical Governors
2. Pneumatic Governors
3. Hydraulic Governors

1. **Mechanical Governor:** To control the engine's speed and load and reduce wastage of fuel governor is used in engines. The mechanical governor is operated mechanically. This governor is generally used in diesel engines. The construction and working principle of the mechanical governor are as follows,

   Construction: In this governor spring loaded weights, control rack, sleeve and bell crank lever are present and linked together properly. The sleeve is placed on the governor shaft and allowed to move freely. The two centrifugal masses are connected with the plunger sleeve through the bell crank lever. The governor shaft gets the power from the engine. The layout of the mechanical governor can be seen in Fig 9.10.

1. ***Height of a governor.*** *It is the vertical* distance from the centre of the ball to a point where the axes of the arms (or arms produced) intersect on the spindle axis. It is usually denoted by *h*.
2. ***Equilibrium speed.*** *It is the speed at* which the governor balls, arms etc., are in complete equilibrium and the sleeve does not tend to move upwards or downwards.
3. ***Mean equilibrium speed.*** *It is the speed* at the mean position of the balls or the sleeve.
4. ***Maximum and minimum equilibrium speeds.*** *The speeds at the maximum and minimum* radius of rotation of the balls, without tending to move either way are known as maximum and minimum equilibrium speeds respectively.
5. ***Sleeve lift.*** *It is the vertical distance which* the sleeve travels due to change in equilibrium speed.

AM_Unit_09.indd 192 31-01-2019 18:02:30

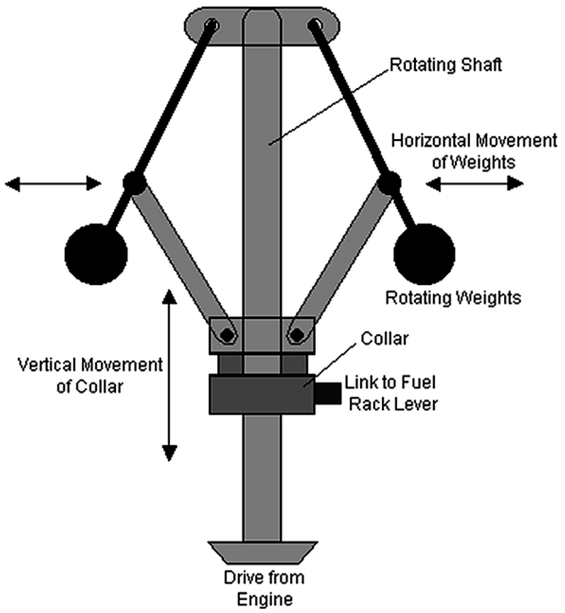

Fig 9.10.1.1 Layout of a Mechanical Gover**nor**

Working Principle: When the engine is started the governor shaft gets the power and rotates. As the governor shaft rotates the masses connected with the spring also rotate and hence the masses are forced to rotate outside due to the centrifugal force. Hence the sleeve placed in the governor shaft is moved upwards. The one end of the lever connected with the control rack is moved up along with the sleeve. This causes the other end of the lever to move down and operates the control rack. Due to this the diesel supplied to the engine is reduced and hence the engine speed is reduced. Similarly when the accelerator pedal of the driver is pressed the control rack is operated and the speed of the engine is varied. In the same way the engine speed can also be increased by moving the centrifugal mass. The governors of this type are of two types. 1. All speed governor and 2. Maximum speed governor. The governor operated by the driver's engine speed control is called as the maximum speed governor and the governor operated by the spring force without the accelerator is called as all speed governor.

2. **Pneumatic Governor :** The governor operated by using only the engine Vacuum without any bolts is called as the pneumatic governor.

Construction: This type of governor has two main parts such as 1. Venturi unit and 2. Diaphragm unit. The venturi unit is connected with the intake manifold and the diaphragm unit is connected with the fuel pump. The venturi unit and diaphragm unit are connected by the Vacuum pipe. The diaphragm is connected to the control rack. The construction of the pneumatic governor is shown in Fig 9.10.1.2.

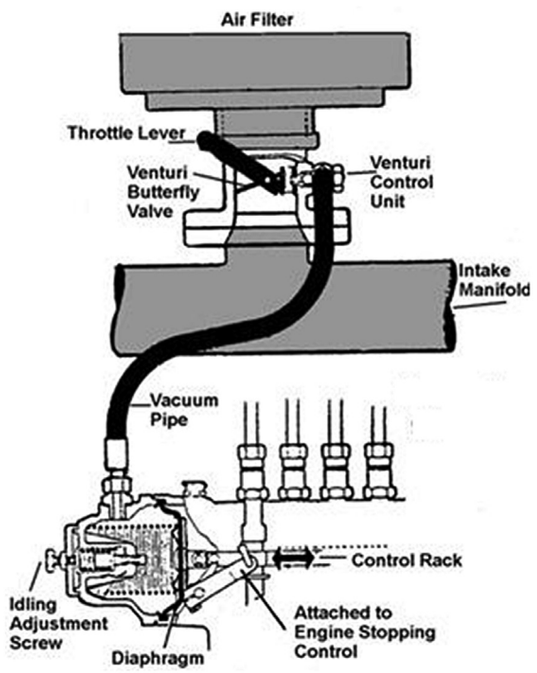

Fig 9.10.1.2 Pneumatic Governor

Working Principle: When the accelerator pedal is pressed the butterfly valve in the venturi opens. Hence the Vacuum in the inlet manifold reaches the diaphragm unit

AM_Unit_09.indd 193 31-01-2019 18:02:30

through the Vacuum pipe. The control rack connected with the diaphragm is operated and the diesel supply is controlled. By this way the engine speed is controlled in the pneumatic governor.

3. **Hydraulic Governor :** This type of governor is operated by the cam shaft of the engine. The control plunger in this governor is connected with the control rack of the fuel injection pump by a spring. This type of governors are operated by the liquid present in the control plunger. When engine is started due to the rotation of the cam shaft the control plunger is operated and the control plunger operates the control rack of the fuel injection pump. The control rack of the fuel injection pump is operated by the hydraulic liquid in the control plunger. The schematic view of the hydraulic governor shown in Fig 9.10.1.3.

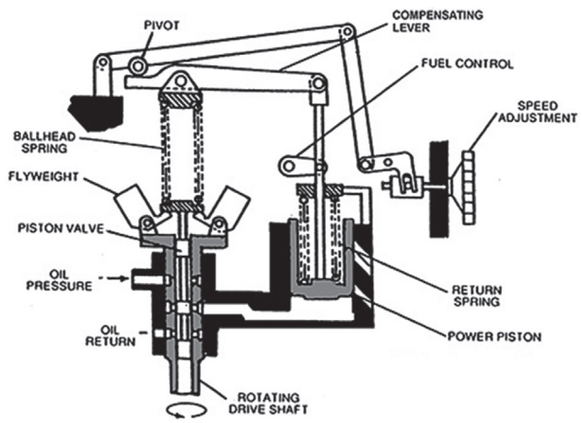

Fig 9.10.1.3 Schematic View of the Hydraulic Governor

9.11 DIESEL KNOCK

Knock in diesel engine is an unwanted effect caused due to the increased ignition delay of the engine. During the ignition delay period fuel is injected continuously. When the accumulation of the fuel is more due to the increased ignition delay, when ignited the accumulated fuel suddenly gets combusted and results in severe fluctuation in cylinder pressure and rate of pressure rise. This cause violent sound called as diesel knock.

9.11.1 *Reasons for Diesel Knock*

1. Lower compression ratio of the engine
2. Lower fuel injection pressure
3. Faulty injector
4. Blockage in the nozzle
5. Earlier injection of the diesel fuel

9.12 COMMON RAIL DIRECT INJECTION

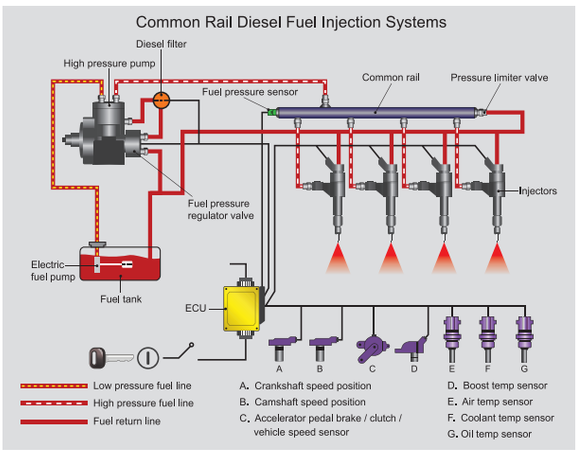

Fig.9.12 Common Rail Direct Injection

Common Rail direct injection of diesel fuel is the recent technology followed in modern diesel engines in introducing diesel fuel inside the engine combustion chamber. To improve the vaporization behaviour of the diesel fuel, the fuel is supplied to a common rail at very high pressure from the fuel pump. This method is called as the common rail direct injection. In this method with a small amount of diesel fuel more power is obtained. In addition the emission levels are reduced

AM_Unit_09.indd 194 31-01-2019 18:02:30

significantly. Hence in modern diesel engines this system is used for good fuel economy and lower emission levels. In this common rail direct injection system the fuel pressure is maintained at 1350 – 2000 bar in the common rail by using a fuel pump. The fuel is supplied to all the injectors from the common rail and injected into the combustion chamber according to the firing order. The pressure maintained in the common rail is not depending on the engine's operation. Hence the CRDI system shows as better method as compared to the conventional engine systems. In the CRDI system the common rail and the high pressure lines connected with the injectors are designed to withstand very high fuel pressures. The electronic control unit (called as ECU) present in the system determines the amount of diesel fuel injected, the fuel pressure, injection timing and the injection duration. The ECU receives the input signals from different sensors, calculates the amount of fuel required, time for injection duration and other details for injection of the fuel and delivers required output signals to the solenoid operated injectors. By this way the fuel injection pressure, time and duration of injection and the amount of fuel injected are controlled.

Construction of CRDI system: The CRDI system consists of a fuel lift pump, a high pressure diesel pump, a common rail for storing diesel at high pressure and solenoid operated diesel injectors. In addition the system has different sensors, actuators and an electronic control unit (ECU). The lift pump is used to pump the diesel fuel through the filter to the high pressure diesel pump. The diesel from the high pressure pump transfers the fuel to the common rail. The injectors mounted on the cylinder head of the engine receive the high pressure fuel from the common rail through the high pressure lines. The solenoid operated injectors open the injector holes according to the signals received from the ECU. 16 bit or 32 bit microprocessor acts as the brain of the ECU used in the CRDI system. The temperature of the engine, temperature of the air and fuel, the rail pressure, engine booster pressure, accelerator pedal position, vehicle speed and intake air amount etc. are monitored continuously by the ECU using different sensors located at different parts of the engine by input signals. Figure 9.12(a) presents the construction of the CRDI system

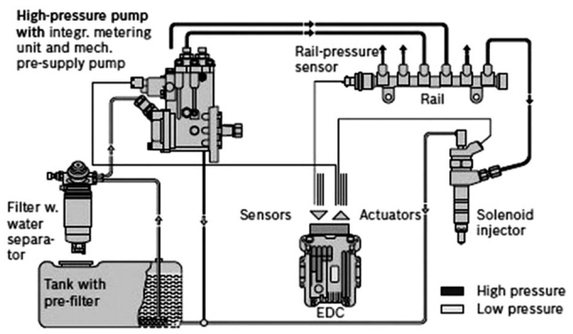

Fig 9.12(a) Construction of the CRDI system

Operation: Diesel fuel from the fuel tank is lifted by the fuel lift pump and supplied to the fuel filter. The fuel lift pump is operated electrically without the support of the engine power. The high pressure pump operated by the engine develops very high pressure and forces the high pressure fuel to the common rail. The fuel from the common rail is supplied to the individual injectors through the high pressure lines and the fuel is sprayed in the cylinder at very high pressure. The electronic control unit receives the

AM_Unit_09.indd 195 31-01-2019 18:02:31

signals from the sensors and calculates the diesel injection pressure, injection timing, amount of fuel injected and the duration of injection etc. and gives output signals to the injectors. The electrical signals from the ECU operates the solenoid switch. Depending on the electrical signals received from the ECU the solenoid will open and close the injector hole and sprays the fuel. The limit switch and the non return valve in the common rail control the diesel pressure and the excess diesel is returned to the fuel tank.

9.12.1 Advantage of CRDI System

1. Improves the engine's performance
2. Reduces the diesel supplied
3. Reduces the emissions
4. Improve the power output
5. Starts the engine quickly
6. Smooth engine operation

Student Activity

1. Students should prepare a report on the rich mixture, lean mixture and normal mixture used in two-wheeler engines.
2. Students should visit the nearby workshops to study the process fuel combustion in an IC engine and should submit a report with the sketch of float chamber, carburettor and AC mechanical pump.

Glossary

Convergent	-	தரமாற்றிக் கொள்ளுதல்
Ventury	-	குறுகிய
Vaporized	-	ஆவியாதல்
Intel Mani Fold	-	உட்செல்லும் வழி
Vacuum	-	வெற்றிடம்
Multi Point Fuel Injection	-	பல துளைகள் கொண்ட எரி பொருள் உமிழ்ப்பான்
Electronic Control Unit	-	மின்னணு கட்டுப்பாட்டுக் கருவி
OTTO Cycle	-	ஆட்டோ சுழற்சி
Centrifugal	-	மைய விலக்கு
Governor	-	செயல் கட்டுப்பாட்டுக் கருவி

AM_Unit_09.indd 196 31-01-2019 18:02:31

References

1. Ganesan V." Internal Combustion Engines, Third Edition, Tata McGraw - Hill ,2007.
2. Mathur, M.L., and Sharma, R.P., A Course in Internal Combustion Engines, Dhanpat Rai Publications Pvt.New Delhi - 2, 1993.
3. Heinz Heisler, Advanced Engine Techology, Butterworth Heinmann Publishers, Second Edition, 2002.

Webliography

1. https://www.youtube.com/watch?v=m6-KZS19HDU
2. http://mechteacher.com/fuel-supply-system-in-diesel-engine/
3. http://enginemechanics.tpub.com/14081/css/Diesel-Fuel-Systems-33.htm
4. https://www.engihub.com/fuel-supply-in-petrol-engine/
5. http://what-when-how.com/automobile/ci-engine-fuel-system-automobile/
6. https://www.howacarworks.com/fuel-systems/servicing-the-fuel-supply-system

AM_Unit_09.indd 197 31-01-2019 18:02:31

SAMPLE QUESTIONS

1. How many types of Fuel Supply System are used in IC Engines?
   a) Two
   b) Three
   c) Four
2. How many Kilogram of air is needed for complete compression of 1 kg of Petrol?
   a) 4 kg
   b) 10 kg
   c) 15 kg
3. Based on air inlet how many types of Carburettor are there?
   a) Two
   b) Three
   c) Four
4. How the Throttle Value in Carburettor is operated?
   a) By Vacuum
   b) By accelerator pedal
   c) By petrol pump
5. Who initially introduced petrol injection system?
   a) Robert Bosch
   b) Nicholas Otto
   c) Rudolph Diesel

Answer the following questions

1. What are the types of Fuel Supply system?
2. What are the important parts in the fuel supply system?
3. How many types Petrol Pump? Mention the names.
4. What is meant by Air fuel ratio?
5. What is meant by Rich mixture?
6. What is meant by Normal mixture?
7. What is meant by lean mixture?
8. What are the functions of the carburettor?
9. What are the requirements of the carburettor?
10. What are the types of the carburettor?
11. Explain with a neat sketch of a simple carburettor.
12. What are the troubles in the simple carburettor?
13. Draw and explain the starting circuit.
14. What are the advantages in the Petrol Injection system?
15. What is meant by ECU?
16. What is meant by MPFI? And name the types.
17. What are the types MPFI? Explain any one type.
18. What are the important parts of the Fuel supply system in Diesel Engine?
19. What is meant by Governor?
20. What are the types Governor?
21. Name the types of a Governor? Explain any one type with sketch.
22. What is meant by Diesel Knocking?
23. What are the reasons for Diesel Knocking?
24. What is common rail diesel injection system? And explain.
25. What are the advantages of CRDI?

AM_Unit_09.indd 198 31-01-2019 18:02:31

Unit 10

Engine Trouble Shooting and Remedies

Contents

10.0 Introduction
10.1 Types of Inspection
  10.1.1 Pre Trip Inspection
  10.1.2 Post Trip Inspection
  10.1.3 Annual Inspection
10.2 Maintenance of Record
  10.2.1 Inspection Form/Road Test Report
10.3 Log Book
  10.3.1 Trip Sheet
10.4 Trouble Shooting
  10.4.1 Cooling System
  10.4.2 Lubrication System
  10.4.3 Petrol Engine
  10.4.4 Diesel Engine
  10.4.5 Fuel System
10.5 Engine Tune Up
  10.5.1 Engine Tuning Procedure

AM_Unit_10.indd 199 11/6/2020 3:12:13 PM

Learning Objectives

- To learn the maintenance procedures to extend the life of vehicles.
- To learn about various maintenance techniques.
- To learn how a vehicle driver maintains the vehicle.
- To learn about the usage vehicle log book, road test form preparation and vehicle servicing.

10.0 INTRODUCTION

All the parts of vehicles are to be maintained periodically by regular inspection. The aim of preventive maintenance is to ensure the safety and to reduce the vehicle down time.

10.1 TYPES OF INSPECTION (MAINTENANCE)

The following three types of sheets are used during inspection

1. Pre Trip Inspection
2. Post Trip Inspection
3. Annual Inspection

10.1.1 Pre Trip Inspection

Daily maintenance are carried out on daily basis. The pre trip inspection has to be carried out by driver and conductor. The main responsibility of driver is to do the pre-trip inspection.

Sometimes if the vehicle is driven by more than one driver, it is important that each driver has to do the inspection during their trip.

The inspection has to be carried out to ensure the safe inspection of the vehicle. If the vehicle is not in a good condition the vehicle has to be removed from use.

10.1.2 Post Trip Inspection

The post inspection is carried out to find the fault in the end of each shift or day. The driver and conductor can do the post trip inspection. So that the fault in the vehicle is verified before it came to the use for the next day and down time also reduced.

The vehicle maintenance form to be attached to the vehicle maintenance file and the copy of the same has to be given to the vehicle inspection person. The provision has to be given to the mechanic for his signature in this form.

All the drivers have to prepare and submit a report about their vehicle at the end of each day.

The vehicle inspection report should have the following content

- It has to identify the vehicle
- All the defects to be listed
- Driver signature is necessary

The following parts of the vehicle have to inspect during pre trip inspection and post trip inspection.

AM_Unit_10.indd 200 31-01-2019 18:04:26

- Light and reflectors
- Brakes and parking brakes
- Mirrors
- Wind shield, wipers, washers
- Tyre, wheel, Rims
- Speedometer
- Doors
- Backup alarm
- Wheel chair lifts
- Visual reviews
- Coupling devices
- Shearing mechanism



The owner of the vehicle has to keep the drive vehicle condition report / daily defect cards in their vehicle. The driver has to give the details about the fault at the end of the day.

10.1.3 Annual Inspection

At the time of fitness Certificate get from the Road Transport Office. We take maintenance of full Vehicle that means under chase and Engine etc, are called Annual Inspection.

10.2 MAINTENANCE OF RECORD

10.2.1 Inspection Form/Road Test Report

1. Road test report shows the condition of vehicle before and after maintenance
2. The road test report will be written by the road test inspector after the vehicle maintenance.
3. This report contains Vehicle registration number, chassis number, TOB number and date of test.
4. The following parameter has to be checked
   - ➢ Front and rear brake caliber
   - ➢ Brake position
   - ➢ Wheel and bearing position
   - ➢ Pickup of the vehicle
   - ➢ Mileage of the vehicle

The sample road test report is given below.

10.3 LOG BOOK

The vehicle log books gives required details about the vehicle to the mechanic for the maintenance and it gives all the detail to the vehicle owner. The log book contains the following details.

- ➢ Distance travel by the vehicle
- ➢ Average fuel cost
- ➢ Best and worst mileage details
- ➢ Overall maintenance expense
- ➢ Cost of vehicle operation
- ➢ The problem of vehicle
- ➢ Previous maintenance dates

The sample log book is shown below.

10.3.1 Trip Sheet

The trip sheet gives all the details from the start to end of the trip. It contains the following information's.

- Trip starting Km and ending Km
- Trips starting time to Ending time

AM_Unit_10.indd 201 31-01-2019 18:04:26

Inspection Forms/Road Test Report

Sl. No.	Parameter to Check	Before Work	After Work
1.	Front Abnormal Sound		
2.	Rear Abnormal Sound		
3.	Front/Rear Suspension Sound		
4.	Steering Sound		
5.	Brake Caliber Sound		
6.	Misfiring/Starting		
7.	Stopping Problems		
8.	Under Body Sound		
9.	Door/Glasses Sound		
10.	Brakes/Door/Wheel Sound		
11.	Wheel Bearing Sound		
12.	Drive shaft Sound		

Vehicle Log Book

Vehicle Reg No : Diesel ☐ Petrol ☐ Kms ☐

Week Beginning : Vehicle Name _____ Driver Name _____

Day	Start Mileage	Finish Mileage	Daily Total	Signature
Monday Tuesday Wednesday Thursday Friday Saturday Sunday				
		Weekly Total :		

AM_Unit_10.indd 202 31-01-2019 18:04:26

Gas/Diesel and Engine Oil

Day	Odo Meter Reading	Fuel in Litres	Product (Gas Diesel or Oil)	Cost of Fund
Monday Tuesday Wednesday Thursday Friday Saturday Sunday				
	Total		Total	

Comments

The sample trip sheet is given below.

Name & Address of the Travels		
Engaged by Mr/Mrs: _____ Vehicle No. _____	Trip No: _____ Driver Name _____	Date: _____
Closing Time : _____ Starting Time : _____ Total Time : _____ Signature of the Customer	 Hire charges per km Driver Batta Excess hours	Rupees _____ _____ _____
	Total	
Advance Rs _____	Driver Signature	For Agency

AM_Unit_10.indd 203 31-01-2019 18:04:26

Vehicle Service Form

Vehicle Name : _____ Vehicle Reg : _____

Date of Service : _____ Mileage : _____

Unit	Yes	No	Comments
Air Filter			
Oil/Oil Filter Change			
Check & adjust the belt			
Check belt			
Check and adjust power steering belt			
Check spark plug gap			
Distributor cap & rotor arm			
Ignition leads			
Check rear brake			
Check front brake			
Check and replace broken light bulb			
Adjust hard brake			
Check and clean battery connection			
Check battery water level			
Renew brake fluid 1 & necessary			
Check type pressure			
Check wiper blades			
Check front and rear suspension			
Charge differential oil			
Grease wheel bearings			
Grease steering			

AM_Unit_10.indd 204 31-01-2019 18:04:26

Vehicle Repair Form

Vehicle Reg : _____ Vehicl Mileage : _____

Driver Name : _____ Date : _____

Discription of Repairs carried out

Reason for repair

_____

_____

_____

Cost of Repairs :

_____

Details of / Company who each carried out Repairs

Name: _____ Phone : _____

Address :

_____

_____

were repairs checked before payments _____

Quality of Repairs

Poor ☐ Satisfactory ☐ Good ☐ Excellent ☐

Signature: _____

Date: _____

AM_Unit_10.indd 205 31-01-2019 18:04:26

Vehicle Accident Report Form

Employer : _____ Age : _____ Sex : _____

Department Supervisor : _____

Date of Accident : _____

Nature of Injuries:

Cause of Accident:

Name & Address of Physician

If Hospitalized, Name & Address at Hospital

Action Taken

Remarks

Supervisor Date :

AM_Unit_10.indd 206 31-01-2019 18:04:26

Driver's Inspection Report

Location/Department : _____

Date : _____

Vehicle Description, year : _____ Male : _____ Model : _____

Serial No. : _____ Mileage : _____

ENGINE CONDITION	INTERIOR	EXTERIOR
☐ Oil Level	☐ Guages/Warmings	☐ Lights
☐ Colour Level	☐ Wind Sheeld	☐ Reflectors
☐ Belts		☐ Suspensions
	☐ Meter/Defrostes	☐ Tyres
	☐ Mirrors	☐ Wheels/Rimers
	☐ Steering	☐ Battery

GENERAL CONDITIONS

☐ Cab/Doors/Windows	☐ Clutch	☐ Exhaust
☐ Body/Doors	☐ Service Brakes	☐ Brake
☐ Oil Leak	☐ Parking Brake	☐ Air Filter
☐ Grease Leak	☐ Caution Triangle	☐ Spare Tyre
☐ Coolant Leak	☐ Emergency Brake	☐ Dents
☐ Sheet Belt	☐ Fire Extinguisher	☐ Other Coupling
	☐ Seat Belt	

Reporting Driver : _____ Date : _____

Receiving Driver : _____ Date : _____

Maintenance Action: ☐ Repair Mode: ☐ No Repair: ☐

Weeked work order / Purchase order No. : _____

Repaired by : _____

Location : _____

Workshop Remarks : _____

AM_Unit_10.indd 207 31-01-2019 18:04:26

Lean manufacturing

Lean manufacturing or lean production, often simply "lean", is a systematic method for waste minimization within a manufacturing system without sacrificing productivity.

Lean also takes into account waste created through overburden and waste created through unevenness in workloads. Working from the perspective of the client who consumes a product or service, "value" is any action or process that a customer would be willing to pay for.

Lean manufacturing makes obvious what adds value, by reducing everything else (which is not adding value).

This management philosophy is derived mostly from the Toyota Production System (TPS) and identified as "lean" only in the 1990s.

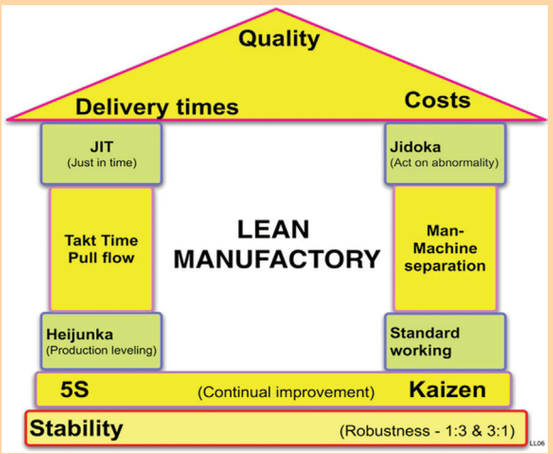

10.4. TROUBLE SHOOTING

10.4.1 Cooling System

Oil Heating	
Causes	**Remedy**
1. Cooling water may be Insufficient	Water to be filled in the radiator
2. Thermostat may not working	To be replaced
3. Water pump may not working	To be repaired or replaced
4. Valve timing may not proper	Set proper timing
5. Blocks may be there in Radiator	To be cleaned
6. Fan belt may cut	To be replaced
7. Excess carbon may deposited	To be removed
8. Blocks in the muffler	To be removed
9. Exhaust pipe may be bend	To be replaced

AM_Unit_10.indd 208 31-01-2019 18:04:27

Over cooling	
a) Thermostat may be damaged	To be replaced
b) Not working of temperature gauge	To be replaced

10.4.2 Lubrication System

Sl. No.	Complaint	Causes	Remedy
1.	Oil Leakage	a) Gasket damaged b) Spraying excess	To be replaced Excess oil to be removed through drainage plug
2.	Low Oil	a) Oil level may be low b) Blocks in the oil filter c) Relief valve springs tension may be low d) Oil diluted oil may be thinned e) Oil gauge may be damaged	Fill correct level Replace the filter element Change the defective spring Change correct grade oil To be replaced
3.	Excessive oil con-sumption	a) Damaging of Piston, piston rings, cylinder liner b) Valve seat defective c) Damaging of Valve stem d) Oil leakage e) Excess Oil level f) Using low viscosity oil	To be replaced To be replaced To be replaced To be change the gasket Maintain the oil level Use correct viscosity oil
4.	High oil pressure	a) Blocks in oil pipe b) Damaged the pressure parts c) High viscosity oil	To be removed the blocks pipe to be reload or clear To be change / rectify Use correct viscosity oil

AM_Unit_10.indd 209 31-01-2019 18:04:27

10.4.3 PETROL ENGINE

Indicating and warning of rectification of engine parts

1. Speedo meter needle always shows zero

Causes	Remedies
1. Speedo meter spindle shafts does not connected	To be repaired
2. Driving key may be wear or broken	To be changed
3. Driver gear may be wear	To be changed
4. Speedo meter may be repaired	To be changed
5. Speedo meter cable may be broken	To be changed

2. Fuel gauge pointer always shows E

Causes	Remedies
1. The wire of ignition switch to gauge or gauge to tank unit may be disconnected	To be checked and rectified
2. Does not earthing of tank unit	To be earthed
3. The float may be punchered	To be changed
4. Gauge may be damaged	To be changed

3. Fuel gauge pointer always shows F

Causes	Remedies
1. Does not earthing of gauge casing	To be proper earthed
2. The tank unit terminal may be earthed	To be insulated
3. Float arm may be checked	To be checked and rectified
4. Gauge may be damaged	To be changed

AM_Unit_10.indd 210 31-01-2019 18:04:27

4. Starter motor rotates but engine not functioning

Causes	Remedies
1. Ignition system may be a problem	System to be checked and repaired
2. Un availability of petrol	Petrol to be filled
3. Pipe line may be blocked	The blocks to be rectified
4. Pump may be a problem	To be repaired
5. Carburettor system may be a problem	To be repaired
6. Engine may be a problem	To be checked and rectified
7. Exhaust system may be blocked	To be checked and rectified

5. Engine does not start

Causes	Remedies
1. Battery may be discharged	Battery to be charged
2. Ignition timing may be changed	To be changed
3. Ignition coil may be problem	To be changed new one
4. Ignition switch may be problem	To be changed new one
5. Disconnection of L .T / H.T wires	Connection to be proper
6. Broken of spark plug	Fixing of new spark plug
7. Excess deposit of carbon	To be cleaned
8. Fuel pump problem	To be checked and rectified
9. Blocking of carburetor parts	Removing the blocks
10. Wearing of piston rings and cylinders	To be changed new one
11. Blocking of exhaust system	Removing the blocks

6. Engine does not run properly

Causes	Remedies
1. Fuel pump may be problem	To be repaired
2. Excess heat of engine	To analysis the reason and rectified
3. The floating level of carburetor may be high	To be rectify the mechanism

AM_Unit_10.indd 211 31-01-2019 18:04:27

7. The Engine Acceleration increases the engine may be stopped

Causes	Remedies
1. Ignition system may be problem	To be check all the system parts and rectified
2. Compression may be improper	To be check and rectified
3. Carburettor throat may be wear	To be check and rectified
4. Clutch and transmission problems	To identify and rectify the problem

8. The good condition of the engine speed is how affect the loss of vehicle

Causes	Remedies
1. The slippage of clutch	To be check the reason and rectified
2. Gear box gears and shafts may be wear or damaged	Damaged parts to be changed
3. Propeller shaft may be wear	To be check and rectified
4. Difference's system may be problem	To be check and rectified

9. Accruing of misfire

Causes	Remedies
1. Spark plug not working in any cylinder	Cleaning / replacing of spark plug
2. Valve clearance not properly set	Set proper clearance
3. Damaging of valves	To be changed new one
4. Wearing of cam in cam shaft	To be changed new one
5. Damaging of cylinder head gasket	To be changed new one

10. Excess noise of engine

Causes	Remedies
1. Valve and parts of valve mechanism may be damaged / wear	Damaged parts to be replaced
2 Connecting rod damaged	To be changed new one
3. Crank shaft damaged	To be rectified
4. Piston pin may be loose	To be check and tight
5. Loosening of engine parts	To be check and tight
6. Valve clearance not properly set	Set proper clearance
7. Engine transfer machine system may be not aligned	Set proper alignment

AM_Unit_10.indd 212 31-01-2019 18:04:27

11. Back firing of engine

Causes	Remedies
1. Ignition timing problem	Ignition timing adjusted
2. Air fuel ratio not proper	Air fuel ratio adjusted
3. Excess heat of engine	To analyses the reason and rectify
4. Valves may not sit in valve seat	Properly set the valve
5. Broken of distributor cup	To be changed new one

12. Excess white smoke of engine

Causes	Remedies
1. Cylinder head gasket damaged	To be changed new one
2. Cylinder head may be loose	To be check and tight

13. Excess blue smoke of engine

Causes	Remedies
1. Mixing of lubricant oil with petrol is high	To be mix proper ratio
2. Damaging of piston rings	To be changed To be re-bored
3. Wearing of cylinder bore	

14. Excess black smoke of engine

Causes	Remedies
1. Excess petrol in fuel mixer	To control the petrol level
2. Ignition system problem	To be checked and rectified
3. Ignition timing problem	Ignition timing adjusted
4. Wearing of jets in the carburettor	To be rectified
5. Wearing of piston rings	To be changed
6. Excess weight on the vehicle	To remove the excess weight

AM_Unit_10.indd 213 31-01-2019 18:04:27

10.4.4 DIESEL ENGINE

1. Engine starting problem

Causes	Remedies
1. Problem in the starting system	To be check and rectified
2. Starter motor may be damaged	To be check and replaced
3. Level of diesel may be low	Maintaining the level of diesel
4. Blocking in air cleaner	To be cleaned
5. Blocking in diesel filter	To be cleaned
6. Diesel pump may be repaired	To be check and rectified
7. F.I.P may be damaged	To be check and rectified
8. Mixing of lubricating oil water in diesel	Lubricating oil water to be separated

2. High consumption of fuel

Causes	Remedies
1. Leakage may be in the fuel system	Leakage to be arrested
2. Blocking in the air cleaner	To be cleaned
3. Valve clearance is not proper	Set proper alignment
4. Compression may be low in the engine	Engine to be over hauled

10.4.5 FUEL SYSTEMS

1. High consumption of fuel

Causes	Remedies
1. Blocks in the air cleaner	To be cleaned
2. Leakage in the fuel system	Leakage to be arrested
3. Driver unnecessarily pressing of accelerator pedal	To avoid pressing of accelerator pedal
4. Excess fuel supply of carburettor	To cut the excess fuel supply
5. Excess size of jets	To be changed
6. Wearing of needle works	To be changed

AM_Unit_10.indd 214 31-01-2019 18:04:27

2. Engine starting of difficulties

Causes	Remedies
1. Blocks in the carburettor jets	To be cleaned by pressurized air
2. Chock valve not closed properly	To be properly closed
3. Blocks in the fuel filter	To be cleaned
4. Fuel pump pressure may be low	To check the pressure and rectify

3. Idling is very low

Causes	Remedies
1. Idling adjustment is very low	Properly adjusted
2. Float adjustment is not proper	Properly adjusted
3. Carburettor is not fixing proper	Properly fixed
4. Loosing of carburettor jets	To be tight
5. Blocks in the air cleaner	To be cleaned

4. Low engine break power

Causes	Remedies
1. Developing lean mixture in carburettor	To be tune up
2. Blocks in the jets	To be cleaned by pressurized air
3. Gasket damaged	To be changed
4. Blocks in the fuel filter	To be cleaned
5. Pumps problem	To be check and rectify

5. Problems during engine operation

Causes	Remedies
1. Blocks in the fuel filter	To be cleaned
2. Pumps problem	To be check and rectify
3. Accelerator's pump is not properly adjusted	Adjusted properly
4. Puncher of pump diaphragm	To be change the diaphragm

AM_Unit_10.indd 215 31-01-2019 18:04:27

10.5 ENGINE TUNE UP

It is a process of inspecting, servicing and replacing the important components of engines like carburettor, spark plug, timing gears, fan belt etc. based on their condition. This will help to improve the performance and reduce the maintenance cost.

10.5.1 ENGINE TUNING PROCEDURE

1. Start the engine with loose condition of spark plug and remove the carbon powder and moisture. Then switch of the engine and remove the spark plug.
2. Checking of engine compression ratio
3. If engine's compression ratio is low then engine is over hauled and rectify the problems. After rectification of compression ratio, spark plug to be fixed.
4. To remove and cleaning of distributor cap. Then check the wearing of cap and wire. If wearing is more then change the new one.
5. To check the distributor's rotor condition. If damaged, change the new one.
6. To check the H.T. wires of distributor. If any damage in that wire, should be replaced.
7. To check the main mechanism of distributor.
8. To check the vacuum mechanism.
9. To check and cleaned the C.B. points, then set the proper gap. If C.B. point damaged then it should be replaced.
10. Again fix the distributor gap and connect the wires properly.
11. To check the battery and maintain the distilled water level.
12. To check the battery wires and rectify the problems.
13. To check the dynamo / alternator when battery is low power.
14. To check the engine belt conditions. If damaged change the fan belt.
15. To check the engine valve clearance and set properly.
16. To tight the inlet manifold's bolts when leakages occurs.
17. To check the leakages, tightness and straightness of fuel pipe lines.
18. To check the leakages in the cooling system and hose pipes. If coolant level is low then maintain the level
19. To check the accelerator connection of and adjust the connection.
20. To check the crankcase ventilation system.
21. To check the quality of engine lubrication oil and if required, change the lubrication oil.
22. To remove and cleaned the carburetor and air cleaner. If required change the air cleaner and to check the chock valves.
23. To check the ignition timings and if required set properly.
24. To check the carburettor's idle speed adjusting screw and if required adjust the same.
25. To check the light and horn. Head light to be adjusted properly.
26. To check the steering system's smoothness and freeness. If required rectify the system.
27. To check the wear, excess movement and tightness of suspension system and shock absorber system.

AM_Unit_10.indd 216 31-01-2019 18:04:27

28. To check the wear and tightness of front wheel, ball joints and bearings.
29. To check the lubricated parts and lubricate the same.
30. The same way the starting motor, ignition coil, condenser, tyre pressure and condition of break and etc., to be check.

Student Activity

1. Students should visit the transport office to learn the procedure involved in getting a vehicle license and getting a Fitness Certificate (FC) for a vehicle.
2. Students should learn the vehicle maintenance and inspection procedure.

Glossary

Parameter	-	வரையறைக்குட்பட்ட வினியோகம்
Distribution	-	வினியோகம்
Ignition	-	எரிதல்
Physician	-	மருத்துவர்
Fire Extinguisher	-	தீ அணைப்பான்
Emergency	-	அவசரம்
Philosophy	-	தத்துவம்
Production	-	உற்பத்தி
Viscosity	-	பிசுபிசுப்பு
Gasket	-	கசிவு நீக்கி

References

1. Rajput R.K. Internal Combustion Engines, Laxmi Publications (P) Ltd, 2006.
2. Ganesan V. Internal Combustion Engines, Third Edition, Tata McGraw - Hill , 2007.

Webliography

1. http://www.austin7.org/Technical%20Advice/Minor%20Engine%20Faults/
2. https://www.johnhughes.com.au/2012/03/12/common-car-troubles-their-causes-and-solutions/
3. http://www.karacare.co.uk/starting.html
4. http://www.old-engine.com/enginetroubles.htm
5. https://auto.howstuffworks.com/engine3.htm
6. https://www.micksgarage.com/blog/common-fuel-systemfuel-related-problems-fix/

AM_Unit_10.indd 217 31-01-2019 18:04:27

SAMPLE QUESTIONS

Choose the correct answer:

1) What is the name of the book? Which consists of all vehicle types of vehicle management?

   a) Vehicle
   b) R.C. Book
   c) Trip sheet Book

2) Which sheet is give all details of the vehicle from the start to end of the trip?

   a) Maintenance sheet
   b) Trip sheet
   c) Record sheet

3) How many types of vehicle maintenance system followed?
   a) 2
   b) 3
   c) 4

4) What is the reason for engine over heating?

   a) low level water in the radiator
   b) low level of fuel
   c) carburetor not functioning in well

5) What is the procedure for engine running in good condition? While change the worn parts of the engine?

   a) engine tune-up
   b) engine checkup
   c) vehicle inspection



Answer the following questions:

1) What are the types of inspection methods followed in vehicle maintenance?

2) What are the types of inspection maintenance? Explain any one type.

3) Explain how the vehicle maintenance record are maintained?

4) Show with neat tabular column how the vehicle road test report prepared.

5) What is meant by trip sheet?

6) Explain vehicle log book.

7) Give short notes above vehicle service form.

8) Write short note above vehicle report form.

9) Write short notes about vehicle accident.

10) Give short notes ab.

AM_Unit_10.indd 218 31-01-2019 18:04:27

Case Studies - Sankar

Name	:	**Sankar S/o Anbazhagan 2-15-7 Osechou, Hitachi, Japan-3170076**
Father Name	:	**A. Anbazhagan**
Mother Name	:	**A. Alamelu**
Education Qualification	:	**Bachelor of Mechanical Engineer**
Occupation	:	**CAD/CAM Engineer**
Name of Company	:	**Mitsubishi Hitachi Power System, Deputation by R-Tchno Japan.**
Address	:	**1-1 Saiwai-cho, 3-Chome, Hitachi, Ibaraki, Japan - 3178585**
E-mail	:	**anbazhagansankar@mhps.com**
Monthly salary	:	**Rs 2,00,000**

Dear Friends,

I would like to share my life's changeover by selecting auto mechanic group in my higher secondary school. I was an average student in my primary and secondary school, as I could not decide my higher secondary education course. At that time I met my Teacher, Mr. Sathiamoorthi, sir He advised me to select auto mechanic group. Auto mechanic lessons which have taught by Mr. Sathiamoorthi sir impressed me to learn more and depth and got excellent marks in public examinations.

Again I was guided by Mr. Sathiamoorthy sir, to select the mechanical engineering in my bachelor degree and graduated with first class as a mechanical engineer. After completed my B.E., I worked and developed as an Engineer at a private Auto mobile manufacturing company for three years

AM_Unit_BM.indd 219 31-01-2019 18:33:53

Japanese people respect Indians for their individuality especially they recognize Tamil people's intelligence. It is great opportunity to work with Japanese people, where we can learn their dedication on work and advanced technology. At the same time they accept our individual talents and opinions.

The Auto mechanic course guided me to select Mechanical engineering, which changed economic level in my life. That helped me to review my social vision and knowledge even to contribute for social welfare activities. I will seed that Education can make all the changes and improvements in life.

I am eternally grateful from the bottom of my heart to Mr. Sathiamoorthi Sir, for his guidance and support to select Auto mechanic group.

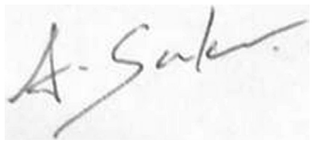

A.Sankar

AM_Unit_BM.indd 220 31-01-2019 18:33:53

Case Studies - Barathan

Name	:	**T. Barathan** B.E., M.Tech,
Father's Name	:	**Mr. S. Thirunavukkarasu**
DOB	:	**03 May 1989**
Address	:	**No: 7/3, Durairaj Street, Devaraj Nagar, Saligramam, Chennai-93.**
Working Place	:	**Agni college of Technology (3.36 L/Annum)**
Annual Salary	:	**Rs 3,36,000**

Dear Friends,

I feel greatly elated to write about my fortune **"The General Cariappa Higher Secondary School"**, Saligramam Chennai.

Cariappa School is not just one among the best schools in Chennai, but this School is much more. Trust me! This school will turn your life completely around. I did my vocational course in Automobile Engg. during the year 2004-2006. I was totally surprised to see the professionalism and the enthusiasm of the teachers in molding the students and shaping their future in the better possible way.

Every day during the school anthem I was strongly driven to succeed in life. I still remember the anthem and would love to quote it again.

"This is my school
I am proud of my school
My school is proud of me
I will bring laurels to my school"

One day the drive to make my school proud burst out as tears, when I was declared state rank in my 12th standard public examination. Thanks is always a thanks even if it is belatedly-said.

AM_Unit_BM.indd 221 31-01-2019 18:33:53

I take this opportunity to thank my teachers, headmaster, School management, Friends and Family for helping me to reach the heights

After completing my schooling I joined Thanthai Periyar Govt. institute of technology, Vellore for my bachelor's degree in Mechanical Engineering in the year 2006. A special thanks to **MPL FORD CARS PRIVATE LTD**, Chennai for sponsoring my higher studies.

After completion I worked with top MNC'S in different Fields of engineering. The blazing spirit of learning which I acquired from my school made me to pursue my post graduation in Central institute of Plastics Engineering and Technology, Chennai. I was lucky to get a placement on campus drive at CIPET at a manufacturing company.

Even though I worked with Different companies at various positions I felt something was empty in my life. To truly salute my teachers I took the teaching profession leaving all my other opportunities.



(**Barathan.T**)

AM_Unit_BM.indd 222 31-01-2019 18:33:53

Case Studies - Sivasubramanian

Dr. M.Sivasubramanian, M.E., Ph.D,
Associate Professor and Head
Department of Automobile Engineering
Kalasalingam Academy of Research and Education

I, Dr. M. Sivasubramanian, pursued my higher secondary vocational course "Auto Mechanic" during the year 1993 to 1995 at T.V.S. Higher Secondary School in Madurai.

I have been fortunate to have Mr. R.S.Muralidharan as my Auto Mechanic teacher at TVS Hr. Sec. School, Madurai. He encouraged the hidden talent and delivered the quality education in the Automobile domain with the mission of spreading knowledge to the students with the learning disabilities was commendable .

This domain knowledge gained in the automobile field through this course enabled me to get an opportunity to pursue my Bachelor's degree in Mechanical Engineering in 1999. Further I have completed Master's degree in Production Engineering in 2005. My interest in automobile fields induced me to carryover my research work in Experimental heat transfer enhancement and Computational Fluid Dynamics and I was awarded with Ph.D degree in Faculty of Mechanical Engineering in the year 2015.

During my research career, published 11 international journals and attended many International Conferences. With the interest and knowledge in automobile field helped me for inventing many things related to automobile and mechanical engineering and as an outcome of this I have registered 19 patents in India. One of the inventions is '**Eco friendly hybrid electric car with self electrical charging'** received a fund of 1lakh rupees from Innovation and Entrepreneurship Development Centre, National Science & Technology Entrepreneurship Development Board (NSTEDB) Department of Science & Technology, Govt. of India.

This Vocational education program "Auto Mechanic" made a real difference in my life. This course created a spark for research, build self-confidence and leadership skills by allowing me to expose my intra personal unique qualities and talents. I believe this course revealed a proper tactic in my life and I hope this will help me in my future endowers also. I take this as a

AM_Unit_BM.indd 223 31-01-2019 18:33:53

golden opportunity to motivate the young budding innovators, technocrats and many more who elects this vocational education course I can say as their career tool to shape their future. I wish that, youth prerequisites to be endowed and it can be done through virtuous vocational education and training.

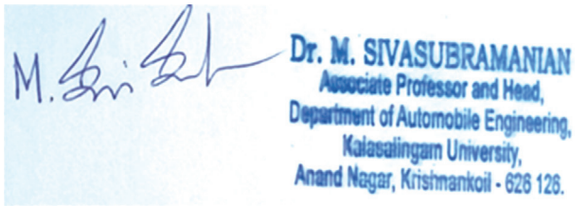

AM_Unit_BM.indd 224 31-01-2019 18:33:53

Case Studies - Jayappriyan

Mr. R.M. Jayappriyan, M.E.,
Junior Research Fellow
Department of Printing Technology,
College of Engineering Guindy, Anna University.

I, R.M. Jayappriyan, aspired to become an Engineer following the footsteps of my father. I enrolled myself in Vocational stream after my secondary education to fulfil my Engineering dream. To narrow down my Engineering dream I made myself in "Auto Mechanic" course during the year 2007 to 2009 at Neelambal Subramaniam Higher Secondary School, Salem. I had great exposure to theoretically and practical in this course. I was able to perform well in my studies with guidance of my teachers and I made a good score in the Public Examination which helped me in getting into a reputed Engineering college. I got State First in Auto Mechanic Subject during the year 2009. I completed my Bachelor's Degree in the discipline Production Engineering from Government College of Technology, Coimbatore during the year 2009 - 2013. After my Graduation, I did my Post-Graduation in Packaging Technology at Anna University, Chennai. I excelled as a Topper of the batch and awarded 1st rank holder and Gold Medallist for the period 2013 - 2015.

I started my Career as Production and Maintenance Engineer in a Label Manufacturing Company, where I used all my knowledge that I got from my Plus Two to Post Graduation. I loved playing the role of Maintenance Engineer in which I had more challenging and great learning environment. Then I found myself to be more interested in learning new things day by day which made to join as Junior Research Fellow at Anna University. I became a Researcher in the department where I studied my Post-Graduation.

I was appointed as Junior Research Fellow for a Project that is supported by the Ministry of Science, Government of India. As a part of the research work,I have presented three national conference and published a paper in a National Journal.

I still remember that I stood Unique in my under Graduate because of my skills in Automobile. At request of my classmates, I took them a class on "Transmission System" of an Automobile Vehicle for an hour. The knowledge with I acquired from the vocational course makes me Technically Sound. The course really impacting knowledge to the Students to the level of Diploma Education. I take the privilege to say that vocational Education system provides a right guidance and a right route to become Engineers, Entrepreneurs, Scientist and many other Professionals. I wish all the Vocational Students to attain great height of Success in their lives.



Jayappriyan R M

AM_Unit_BM.indd 225 31-01-2019 18:33:53

Model Question Paper

Marks -Allocation
Auto Mechanic 1st Year – Vocational Theory

Total Marks - 90

Internal Assessment Mark - 10

Total Mark - 100

Part – A	Choose the Best Answer	1 × 15 = 15 marks
Part – B	Answers the Following Ten Question	3 × 10 = 30 marks
Part – C	Answer the Following 5 Question	5 × 5 = 25 marks
Part – D	Answer the following 2 Questions	2 × 10 = 20 marks

Total	90 marks
Internal Assessment	10 marks
Total	100 marks

AM_Unit_BM.indd 226 31-01-2019 18:33:53

Auto Mechanic 1st Year – Vocational Theory
Model Question Paper
Total Marks: 90

Part – A

Choose the correct Answer

Answer all the Questions ***15 × 1 = 15***

1. What is the abbreviation of ABS ?
   a) Anti Log braking system
   b) Anti Brake System
   c) Air Brake System
2. Which principle is used in the hydraulic Jack?
   a) Pascal Law
   b) Newton Law
   c) Lever Principle
3. Honing Machine is used to
   a) To drill the cylinder
   b) To enlarge the hole in cylinder
   c) To finish the cylinder bore accurately
4. What type of liquid fuel used in Automobile Engine
   a) Mineral Oil
   b) Vegetable Oil
   c) Animal Oil
5. Crank throw is
   a) The distance between TDC & BDC
   b) Half of the stroke length
   c) Double time of the Stroke Length
6. Which material is used for manufacturing cylinder block?
   a) Gray cast iron or aluminum alloy
   b) Cast iron or steel
   c) Brass or steel
7. Connecting Rod is used to
   a) To connect Crank shaft and cylinder head
   b) To connect crank shaft and piston
   c) To connect crank shaft and cylinder block
8. Which is used to prevent leakage between cylindet and cylinder head
   a) Gasket
   b) Oil seal
   c) Dust cover

AM_Unit_BM.indd 227 31-01-2019 18:33:53

9. Which liner is directly contact with cooling water
   a) Dry linner
   b) Wet liner
   c) None
10. Which is used to open the value in Engine?
   a) Crank shaft
   b) Cam shaft
   c) Fly Wheel
11. Which Chemical is used to prevent freezing of cooling water?
   a) Ethyl glyed
   b) Acetone
   c) Methane
12. Which Value is located in Radiator Pressure cap?
   a) Pressure valve
   b) Thermostat valve
   c) Pressure and vacuum valve
13. In Internal combustion Engines how many types of fuel supply system.
   a) Two
   b) Three
   c) Four
14. How many types of Air entering system in a carburetor
   a) Two
   b) Three
   c) Four
15. what is the Reason for engine overheating
   a) Low level water in the radiator
   b) Low level of fuel
   c) Carburetor not function well

Part – B

Answer any ten questions ***3 × 10 = 30***
Note : Question No 25 is Compelsury

16. Define Safety Precaution
17. Define First–Aid?
18. What are the Simple hand tools?
19. What are the types of hammers?
20. What is meant by volt meter?
21. Define fuels.

AM_Unit_BM.indd 228 31-01-2019 18:33:53

22. Who is invented petrol Engine?
23. What is meant by muffler?
24. What is meant by Thermostat valve?
25. What is meant by S.A.E?
26. What is meant by volatility?
27. What is meant by Trip – Sheet?

Part – C

Answer the Any Five questions ***5 × 5 = 25***

Note : Question No 30 is Compulsory

28. Explain any five safety precautions on the tools.
29. Mention any Five Sizes of Box spanner.
30. Write any five properties of petrol.
31. Mention any five types of Ring Spanners.
32. State any five method to control the expansion of piston due to overheat.
33. Name the types of Radiator.
34. What is meant by M.P.F.I and name the types?

Part – D

Answer all Questions ***2 × 2 = 20***

35. Explain about R.P.M Gauge?

    (or)

    Describe History of Automobile.

36. Draw a neat sketch of overhead puppet valve mechanism and Explain the same.

    (or)

    What is common Rail Diesel injection System and Explain.

AM_Unit_BM.indd 229 31-01-2019 18:33:53

References

Unit – 1 Industrial Safety

1. Accident Prevention Manual for Industrial Operations", N.S.C.Chicago, 1982.
2. Blake R.B., "Industrial Safety" Prentice Hall, Inc., New Jersey, 1973.
3. Dan Petersen, "Techniques of Safety Management", McGraw - Hill Company, Tokyo, 1981.
4. Heinrich H.W. "Industrial Accident Prevention" McGraw-Hill Company, New York, 1980.
5. John Ridley, "Safety at Work", Butterworth and Co., London, 1983.
6. Lees, F.P., "Loss Prevention in Process Industries" Butterworth publications, London, 2nd edition, 1990.
7. Relevant Indian Standards and Specifications, BIS, New Delhi.
8. "Safety and Good House Keeping", N.P.C., New Delhi, 1985.

Unit – 2 Tools and Measuring Instruments

1. Jain R.K., "Engineering Metrology", Khanna Publishers, 2005.
2. Alan S. Morris, "The Essence of Measurement", Prentice Hall of India, 1997.
3. Gupta S.C, "Engineering Metrology", Dhanpat rai Publications, 2005.
4. Jayal A.K, "Instrumentation and Mechanical Measurements", Galgotia Publications 2000.
5. Beckwith, Marangoni, Lienhard, "Mechanical Measurements", Pearson Education, 2006.
6. Donald Deckman,"Industrial Instrumentation", Wiley Eastern, 1985.

Unit – 3 Fuels and its Types

1. Rajput R.K. Internal Combustion Engines, Laxmi Publications (P) Ltd, 2002.
2. Rai G.D., "Non-conventional energy sources", Khanna publishes, 1993.
3. Khandelwal K.C., Mahdi S.S., "Biogas Technology - A Practical Handbook", Tata McGraw Hill, 1986.
4. David Boyles, "Bio Energy Technology Thermodynamics and costs", Ellis Hoknood Chichester, 1984.
5. Mahaeswari R.C., "Bio Energy for Rural Energisation", Concepts Publication,1997.

Unit – 4 Automobile History

1. Kirpal Singh, "Automobile Engineering Vol 1 & 2", Standard Publishers, Seventh Edition, 1997, New Delhi.
2. Jain, K.K., and Asthana. R.B, "Automobile Engineering" Tata McGraw Hill Publishers, New Delhi, 2002.
3. Joseph Heitner, "Automotive Mechanics", Second Edition, East-West Press, 1999.
4. Newton,Steedand Garet, "Motor Vehicles", Butterworth Publishers,1989.

Unit – 5 Engine

AM_Unit_BM.indd 230 31-01-2019 18:33:53

1. Kirpal Singh, "Automobile Engineering Vol 1 & 2", Standard Publishers, Seventh Edition, 1997, New Delhi.
2. Jain, K.K., and Asthana. R.B, "Automobile Engineering" Tata McGraw Hill Publishers, New Delhi, 2002.
3. Ganesan V. Internal Combustion Engines, Third Edition, Tata McGraw - Hill, 2007.
4. B.P. Pundir, I.C. engine combustion and emissions. Narosa Publishing House, July 2010.
5. Rajput R.K. Internal Combustion Engines, Laxmi Publications (P) Ltd, 2006.
6. Ramalingam, K.K., Internal Combustion Engines, SciTech Publications (India) Pvt. Ltd., 2004.

Unit – 6 Intake, Exhaust System and Combustion Chambers)

1. Rajput R.K. Internal Combustion Engines, Laxmi Publications (P) Ltd, 2006.
2. Ganesan V. Internal Combustion Engines, Third Edition, Tata McGraw - Hill, 2007.
3. B. P. Pundir, "IC Engines Combustion and Emission" Narosa publishing house, 2010.
4. Crouse William, Automotive Emission Control, Gregg Division /McGraw - Hill, 1980.
5. Mathur, M.L., and Sharma, R.P., A Course in Internal Combustion Engines, Dhanpat Rai Publications Pvt. New Delhi-2, 1993.

Unit – 7 Cooling System

1. Rajput R.K. Internal Combustion Engines, Laxmi Publications (P) Ltd, 2006.
2. Ganesan V. Internal Combustion Engines, Third Edition, Tata McGraw - Hill, 2007.
3. Duffy Smith, Auto Fuel Systems, Good Heart Wilcox Company Inc., Publishers, 1987.
4. Eric Chowanietz, Automobile Electronics, SAE International, 1995.
5. Internal Combustion Engine Handbook: Basics, Components, Systems and Perpectives, Richard Van Basshuysen and Fred Schafer (Editors) SAE International USA and Siemes VDO Automotive, Germany, 2002.

Unit – 8 Lubrication System

1. Rajput R.K. Internal Combustion Engines, Laxmi Publications (P) Ltd, 2006.
2. Ganesan V. Internal Combustion Engines, Third Edition, Tata McGraw - Hill, 2007.
3. Duffy Smith, Auto Fuel Systems, Good Heart Wilcox Company Inc., Publishers, 1987.
4. Eric Chowanietz, Automobile Electronics, SAE International, 1995.
5. Internal Combustion Engine Handbook: Basics, Components, Systems and Perpectives, Richard Van Basshuysen and Fred Schafer (Editors) SAE International USA and Siemes VDO Automotive, Germany, 2002.

Unit – 9 Fuel Supply System

1. Ganesan V. Internal Combustion Engines, Third Edition, Tata McGraw - Hill, 2007.
2. Mathur, M.L., and Sharma, R.P., A Course in Internal Combustion Engines, Dhanpat Rai Publications Pvt. New Delhi - 2, 1993.
3. Heinz Heisler, Advanced Engine Techology, Butterworth Heinmann Publishers, Second Edition, 2002.

Unit – 10 Engine Faults and Remedies

1. Rajput R.K. Internal Combustion Engines, Laxmi Publications (P) Ltd, 2006.
2. Ganesan V. Internal Combustion Engines, Third Edition, Tata McGraw - Hill, 2007.

AM_Unit_BM.indd 231 31-01-2019 18:33:53

Common Glossary

கலைச் சொற்கள்

வ. எண்	ஆங்கிலம்	தமிழ்
1	Engine	விசைப்பொறி
2	Cylinder	உருளை
3	Cylinder Block	கலன் கூறு
4	Cylinder Head	கலன் தலை
5	Crank Shaft	மாற்று அச்சுத் தண்டு/வளைவச்சுத் தண்டு
6	Cam Shaft	நெம்புருள் தண்டு
7	Fly Wheel	விசையாள் சில்லு
8	Vibration Damper	அதிர்வு தாங்கி
9	Dash Board	முகப்புப் பெட்டி
10	Delivery Pipe	விடு குழாய்
11	Exhaust Manifold	வெளியேற்று பன் மடிமம்
12	Inlet Manifold	உள்ளிழு பன் மடிமம்
13	Governor	செயல் கட்டுப்பாட்டுக் கருவி
14	Indicator	சுட்டிக்காட்டி
15	Idle Speed	நிலையியக்க வேகம்
16	Ignition Circuit	தீ மூட்டுச் சுற்று
17	Ignition Switch	தீ மூட்டு திறப்பான்
18	In Line Engine	கலன்கள் நேர்வரிசையாக உள்ள விசைப் பொறி
19	Catalytic Converter	வினையூக்கி மாற்றி
20	Ignition	பற்றி எரிதல்
21	Nozzle	தெளி மூக்கு/நுனிக்குழாய்
22	Piston	ஆடுதண்டு
23	Pressure Valve	அழுத்த திறப்பான்
24	Radiator	வெப்ப குறைப்பான்
25	Spark Plug	தீப்பொறிச் செருகி (or) தீப்பொறி கட்டை
26	ABS	விட்டு பிடிக்கும் நிறுத்தி
27	EFI	மின்னணு எரிபொருள் உட்செலுத்தமைப்பு
28	MPFI	பன்முனை எரிபொருள் உட்செலுத்தமைப்பு
29	Throttle Body	நெரிப்பகம்
30	Throttle Body Fuel Injector	நெரிப்பக எரி பொருள் தெளிப்பான்
31	Throttle Position Sensor	நெரிநிலை உணரி
32	Throttle Plate	நெரி தகடு
33	Turbo Charger	சுழல் ஊட்டி
34	Belt Drive	வார் இயக்கி
35	Carburetor	கலவை கருவி
36	Connecting Rod	இணைப்புத்தண்டு

AM_Unit_BM.indd 232 31-01-2019 18:33:53

BASIC AUTOMOBILE ENGINEERING

Practical

AM_English_Practicals.indd 233 12/20/2019 5:49:58 PM

CONTENTS

Sl. No	NAME OF THE EXERCISE	Page No	Month
1	VERNIER CALIPER	235	June
2	MICROMETER	240	June
3	DECARBONISING	244	July
4	CARBURETTOR	248	July
5	OIL PUMP	252	August
6	AC MECHANICAL FUEL PUMP	256	August
7	SILENCER	259	September
8	PISTON ASSEMBLY	262	October
9	WATER PUMP	266	October
10	DIESEL INJECTOR	269	November

AM_English_Practicals.indd 234 12/20/2019 5:49:58 PM

EXERCISE

1

VERNIER CALIPER

EXERCISE 1

Aim

To find the outside diameter, inside diameter and depth of a given object accurately by using vernier caliper.

Equipments Required

Vernier caliper

Parts

- Beam
- Fixed jaw for External Measurement
- Fixed jaw for Internal Measurement
- Movable jaw for External Measurement
- Movable jaw for Internal Measurement
- Main Scale
- Blade for depth measurement
- Adjusting finger grip
- Locking screw

AM_English_Practicals.indd 235 12/20/2019 5:49:58 PM

AM_English_Practicals.indd 236

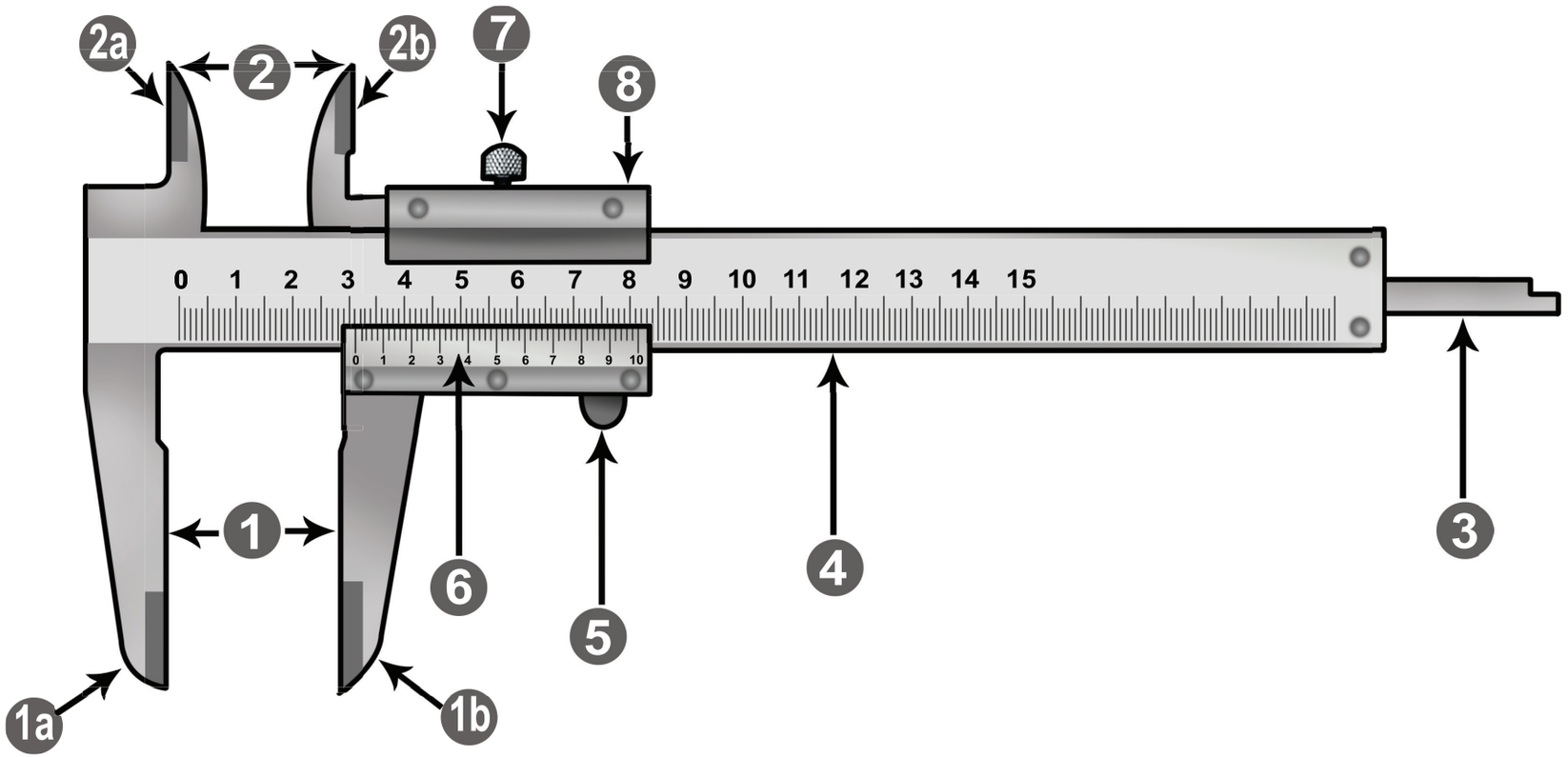

1.Lower Jaws
2.Upper Jaws
3.Depth Probe
6.Vernier
1a.Lower Fixed Jaw
2a.Upper Fixed Jaw
4.Main Scale
7.Friction Nut
1b.Lower Movable Jaw
2b.Upper Movable Jaw
5.Retainer
8.Slider

Fig 1.Vernier caliper

12/20/2019 5:49:59 PM

Beam

Beam is the basic part of the verniercaliper. Main scale is graduated on beam. Each graduation in main scale equals to 1mm. Every tenth graduation line is marked as bold and big.

Fixed jaw for External or Internal measurement

Fixed jaw is located left side top and bottom of the beam. These two jaws are attached with beam. Vernier unit is moving on the backside of the beam.

Movable jaw for External or Internal measurement

Both movable jaws are moving together during measurement. Main scale is graduated in between the movable and fixed jaw.

Vernier scale moves along with movable jaw in right side. By this movement we can able to measure as required. Vernier unit is locked by locking screw after measuring. To give more accurate measurement a fine adjusting screw is also provided.

Least Count

The least measurement that can be measured with an instrument is called least count. The least count is the difference between main scale division and vernier scale division.

Least count = Main scale division – Vernier scale division

Note

Let	Main scale division	= 1mm
	Vernier scale division	= 9 / 10 = 0.9mm
	Then Least count	= 1-0.9
		= 0.1 mm

Material

Verniercaliper is manufactured with nickel chromium steel.

Depth bar

It is located on the backside bottom of the main scale. It is used to measure the depth of an object.

Procedure for Measurement

- Take the measurement in the main scale
- In vernier scale, note down the line which coincides with main scale.
- Now multiply least count with vernier scale measurement. This gives the vernier scale reading.
- Add main scale reading and vernier scale reading. This is the required measurement.

AM_English_Practicals.indd 237 12/20/2019 5:49:59 PM

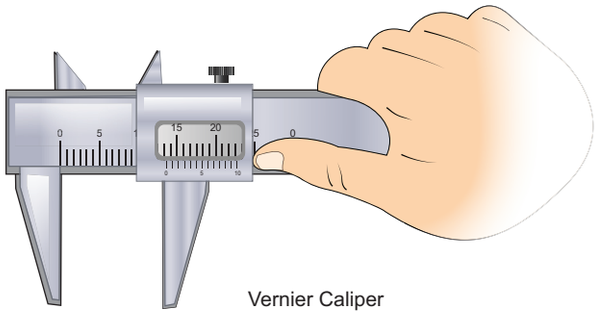

Vernier Caliper

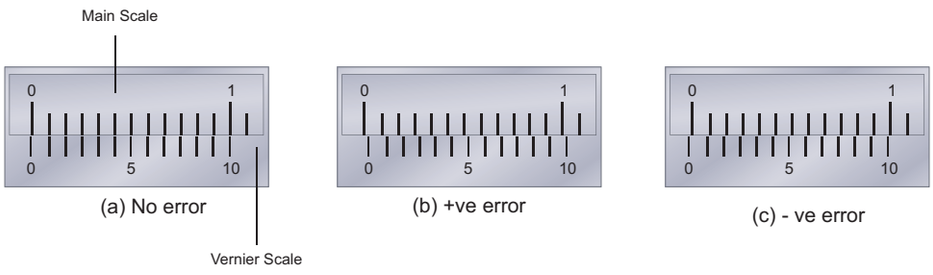

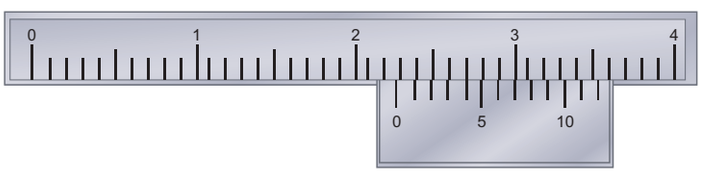

(d) Vernier reading

A model reading
MSR = 2.3 cm ; VSC = 4 divisions;
Reading = [2.3 cm+(4x0.01cm)] = 2.34 cm

Zero error

When both jaws closed together, Zero error occurs when zero on the main scale coincides with the zero on the veriner scale.

Positive error

When both jaws closed together, the vernier scale zero is more than the zero on the main scale.

Negative error

When both jaws closed together, the vernier scale zero is less than the zero on the main scale.

If the error occurs, add or subtract from the measurement appropriately.

a) Outside Diameter

- Fix the given object in between the fixed jaw and movable jaw for external measurements.
- Using the adjusting screw, adjust and lock the locking screw.
- Now take the external measurement of the object.

AM_English_Practicals.indd 238 12/20/2019 5:49:59 PM

S.No	Description	Measurement
1	Main Scale Reading (MSR)	––––– mm
2	Vernier scale Reading (VSR)	––––– mm
3	Error (Positive/Negative)	––––– mm
	Final measurement	––––– mm

b) Inside Diameter

- Fix the given object in between the fixed jaw and movable jaw for internal measurement.
- Using fine adjusting screw, adjust and lock the locking screw.
- Now take the internal measurement of the object.

S.No	Description	Measurement
1	Main Scale Reading (MSR)	––––– mm
2	Vernier scale Reading (VSR)	––––– mm
3	Error (Positive/Negative)	––––– mm
	Final measurement	––––– mm

c) Depth

- Take the depth measurement using bar given backside of the main scale in the verniercaliper.
- Adjust the length of bar by moving the movable jaw of a verniercaliper. Adjust and lock the locking screw.
- Now take the depth measurement of the object.

S.No	Description	Measurement
1	Main Scale Reading (MSR)	––––– mm
2	Vernier scale Reading (VSR)	––––– mm
3	Error (Positive/Negative)	––––– mm
	Final measurement	––––– mm

Conclusion

Measurements are taken accurately and tabulated.

AM_English_Practicals.indd 239 12/20/2019 5:49:59 PM

EXERCISE 2

MICROMETER

EXERCISE 2

Aim

To find the external diameter of the object accurately by using outside micrometer.

Required Instrument

Micrometer

Parts

- 'U' frame
- Anvil
- Spindle
- Lock nut
- Barrel (or) sleeve
- Major scale
- Minor scale
- Thimble
- Ratchet (or) Ratchet screw
- Knurled grip

Various Sizes of Micrometer

Outside micrometers are available in the following sizes.

1. 0 to 25 mm
2. 25 to50 mm
3. 50 to 75 mm
4. 75 to 100 mm & above

AM_English_Practicals.indd 240 12/20/2019 5:49:59 PM

AM_English_Practicals.indd 241

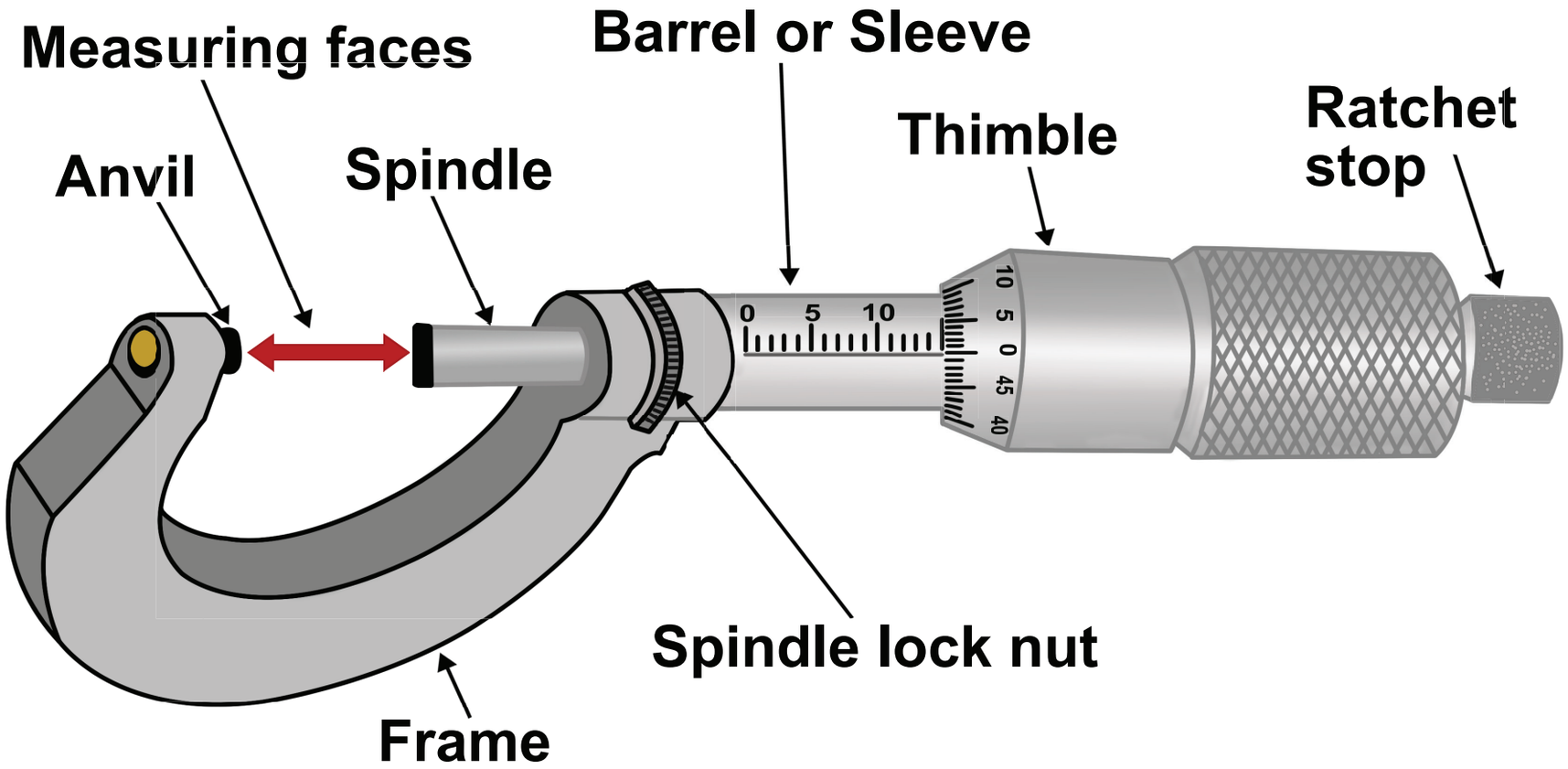

Fig 1. MICROMETER

12/20/2019 5:50:00 PM

Description

Bolt and Nut principle is used in micrometer. Both the major scale reading and minor scale reading are on the barrel. One division in major scale equals to 1mm and 0.5 mm in minor scale. Major scale is marked above the datum line and minor scale is marked below the datum line. Thimble is divided into 50 equal parts and graduated on circumference. One division of thimble is 0.01 mm.

One division on major scale = 1 mm
One division on minor scale = 0.5 mm
One division on Thimble $= \frac{0.5}{50} = 0.01$ mm

Anvil and Spindle ends are fitted with Carbidge tips.

If anvil and spindle are closed together, then thimble and the indexed line should coincide with '0'. When there is no error, this is called as zero error. Before taking the measurements, ensure that there is any error in the micrometer. Positive and Negative errors are adjusted by adding and subtracting with the measurements taken.

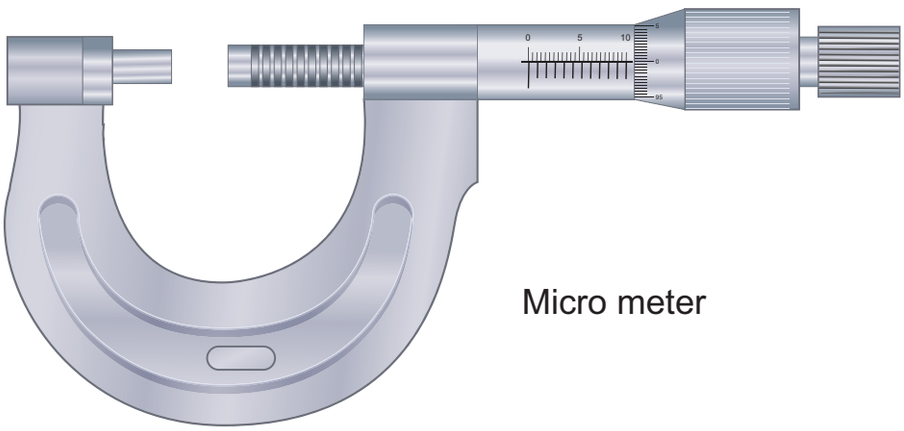

Micro meter

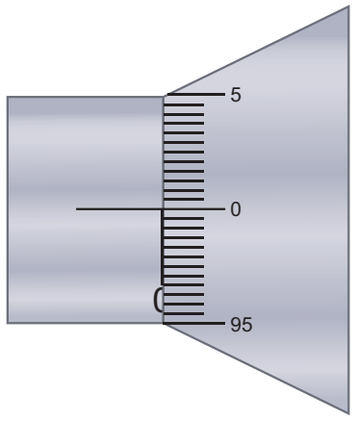

(a) No error

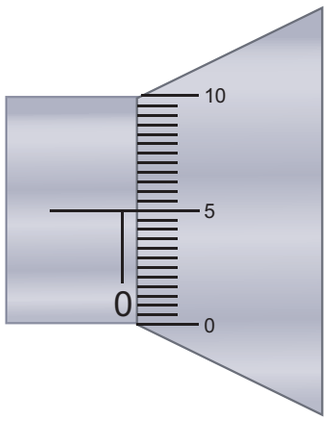

(b) +ve error

AM_English_Practicals.indd 242 12/20/2019 5:50:00 PM

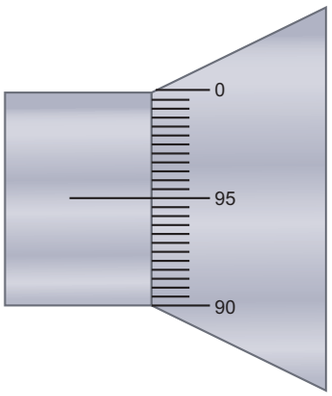

(c) - ve error

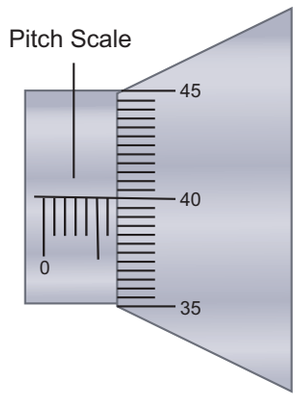

(d) Micro meter reading ★

★A model reading
PSR = 6 mm ; HSC=40 divsions;
Reading = [6mm+(40x0.01mm)]=6.40mm

Large Micrometer

- We can measure up to 25mm using 0-25 mm micrometer. Suitable size of extended anvil can be attached for measuring larger size.

Measuring Methods

1. Select correct size micrometer
2. Place the measuring object in between anvil and spindle.
3. Tight the thimble using ratchet stop.
4. Note down the main scale division reading.
5. Note down the sub scale division reading.
6. Note down the thimble reading. It is multiplied by least count.
7. Finally add all the measurement.

S.No	Explanation	Reading
1.	Major scale division	----- mm
2.	Minor scale division	----- mm
3.	Thimble reading	----- mm
4.	Error	----- mm
	Measurement	----- mm

Conclusion

Outside diameter is measured accurately using micrometer and the measurements are tabulated.

AM_English_Practicals.indd 243 12/20/2019 5:50:01 PM

DECARBONISING

EXERCISE

3

EXERCISE 3

Aim

To remove the carbon settled on cylinder block, cylinder head and piston head in the engine block.

Equipment Required

An engine.

Tools Required

1. Double End Spanner set,
2. Wooden Mallet,
3. Screw driver,
4. Scrapper,
5. Drilling machine,
6. Wire brush.

Materials Required

1. Cotton waste,
2. Kerosene,
3. Emery sheet,
4. Fine cloth,
5. Compressed air.

AM_English_Practicals.indd 244 12/20/2019 5:50:01 PM

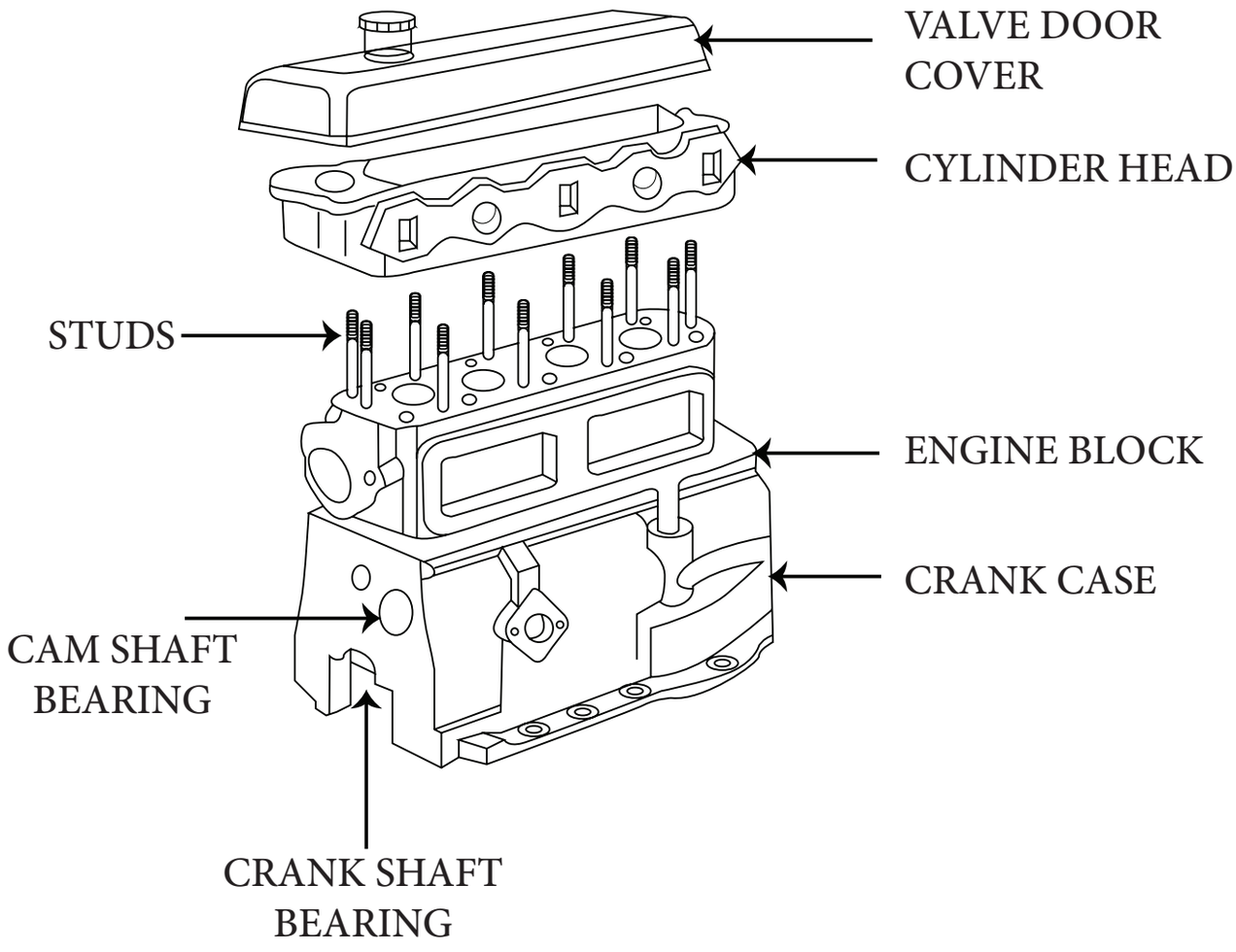

Fig 1. Cylinder block - Line Diagram

Reasons for Decarbonising

1. Black smoke exits through silencer.
2. Pre Ignition
3. More exhaust noise
4. Back firing
5. Due to depreciated piston ring the lubrication oil get burned and settled on the combustion chamber

AM_English_Practicals.indd 245 12/20/2019 5:50:01 PM

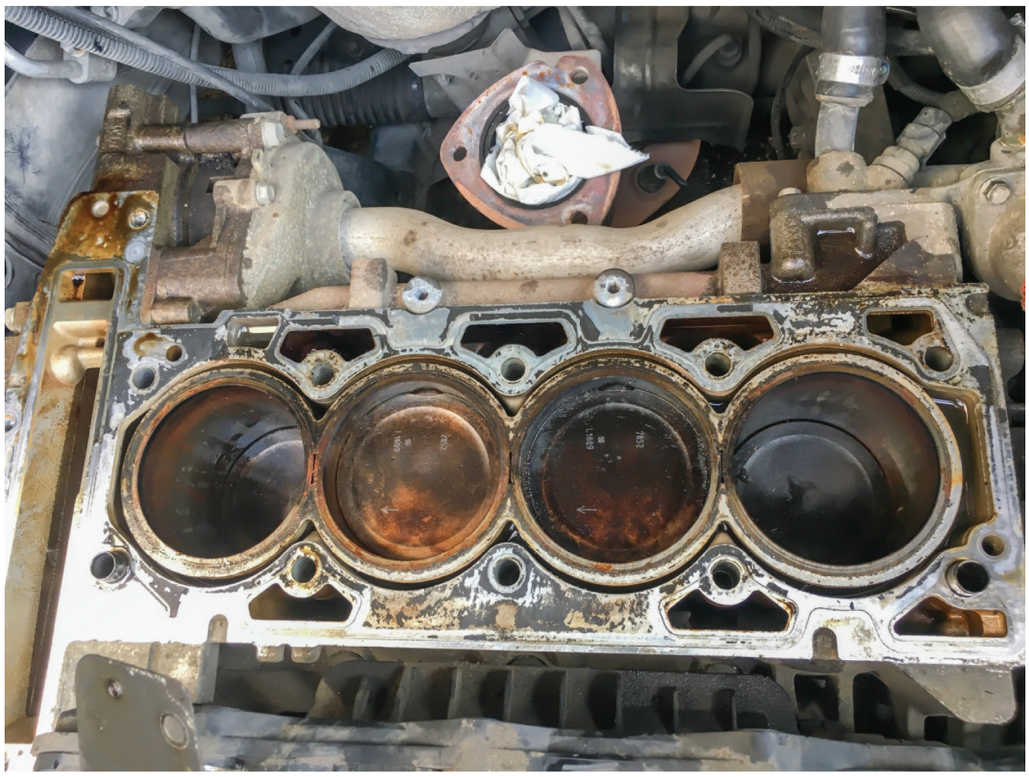

Fig 2. Cylinder block - Before Decorbonising

Procedure for Dismantling

1. The following parts to be removed in order:
   - ❑ Fan belt
   - ❑ Dynamo
   - ❑ Fan
   - ❑ Water pump
   - ❑ Exhaust manifold
   - ❑ Air cleaner
   - ❑ Carburettor
   - ❑ Inlet manifold
2. Lubrication oil needs to be drained completely, the oil pump and oil gallery tube to be removed.
3. Ignition coil, distributor, petrol pump and oil pump to be removed.
4. After removing the valve door, Tappet Push rod, Rocker arm, Valve spring, Spark plug or diesel injector will also be removed.
5. After all the parts are separated, cylinder head to be removed by wooden mallet and to be kept in a clean place.
6. The Crank Shaft need to be moved to TDC and the carbon particles on the piston head and to be removed by scrapper using clean cloth.

AM_English_Practicals.indd 246 12/20/2019 5:50:01 PM

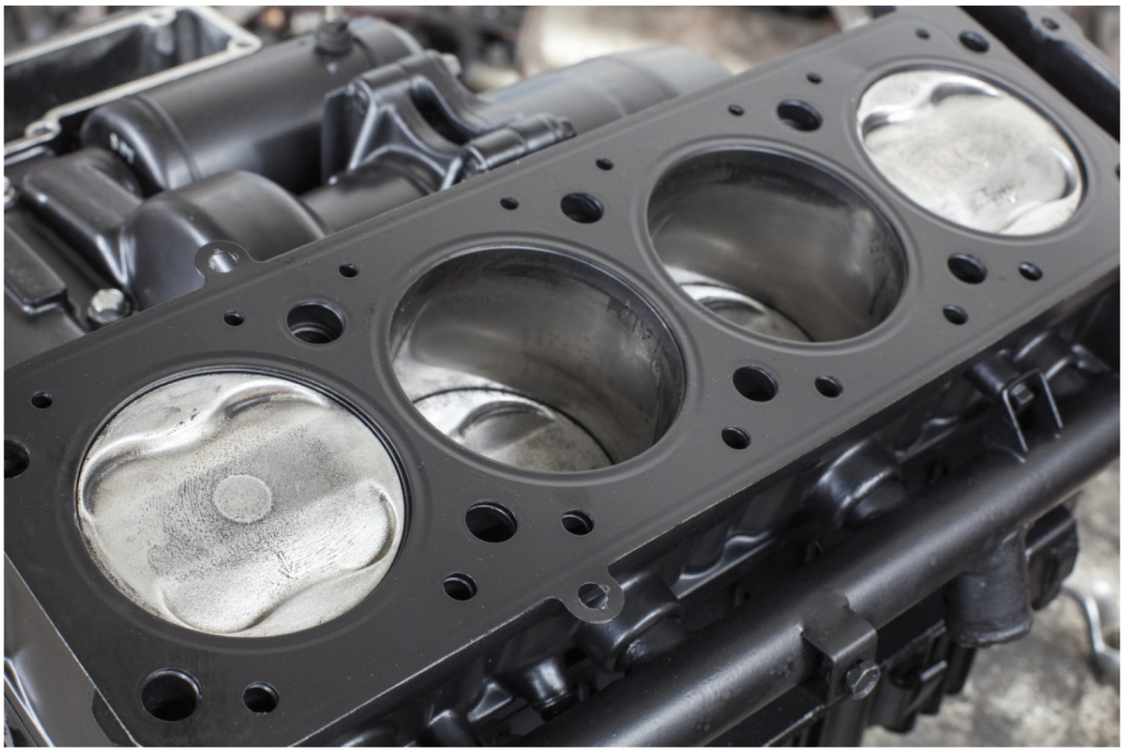

Fig 3. Cylinder block - After Decorbonising

Precaution

When Cleaning one Cylinder piston close all other Cylinder by Cloth, otherwise the carbon particles damage the other cylinder and Piston by the Carbon Particles.

Re – Assembling

After decarbonising process is finished, all the parts are assembled in the reverse manner of the dismantling inorder

Note

During Assembly process use new Gasket for all Joints.

Conclusion

After Completing the decorbornising process all the parts are re – assembled

AM_English_Practicals.indd 247 12/20/2019 5:50:01 PM

EXERCISE

4

CARBURETTOR

EXERCISE 3

Aim

To remove the carburettor from a given engine repair service and refix.

Equipment Required

Engine

Tools Required

1. Double ended spanner
2. Screw driver
3. GO- NOGO Gauge
4. Magnifying glass-10x

Materials Requred

1. Soft cloth
2. Sufficient petrol
3. Low pressure air
4. Sprit senor paper
5. Fine brush

AM_English_Practicals.indd 248 12/20/2019 5:50:01 PM

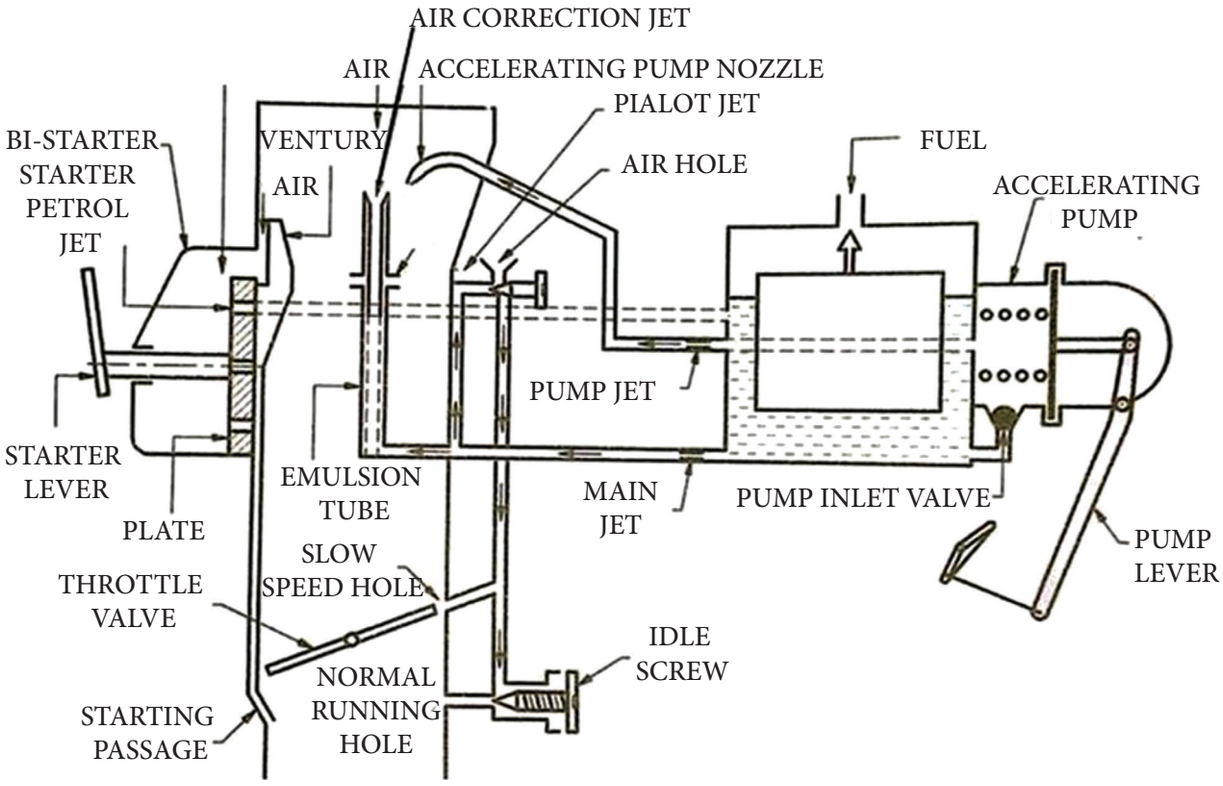

Fig 1. Carburettor - Line Diagram



Fig 2. Carburettor

AM_English_Practicals.indd 249 12/20/2019 5:50:02 PM

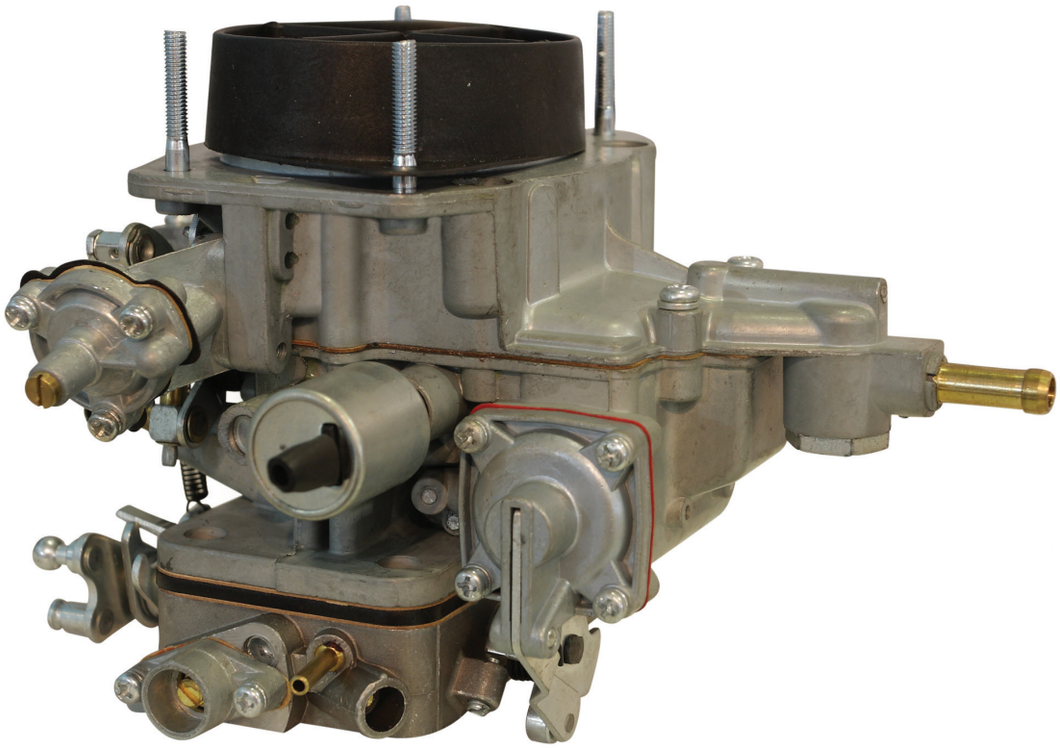

Fig 3. Carburettor

Reasons For Dismantling

1. Air fuel mixture does not come to the engine from the carburettor.
2. Efficiency of the engine is less.
3. KMPL of the engine decreases.
4. Starting trouble due to repair in the Accelerator Pump Circuit.
5. Starting trouble of the engine
6. Sudden halt of the engine while running
7. Time lapse as recommended periodical inspection by the company.

Removal

1. After completing all precautionary steps the carburetor to be removed from the engine.
2. First drain plug need to be removed from the carburetor and the fuel need to becollected in a vessel and to be kept in a safe place
3. Inlet connection need to be removed. Inlet joints to be kept closed using a clip if it is flexible.
4. Air cleaner connection need to be disconnected.
5. Carburettor need to be removed from the Engine Inlet Manifold and to be kept in a highly ventilated room.

AM_English_Practicals.indd 250 12/20/2019 5:50:02 PM

Dismantling

1. Remove the Carburettor top lid with a proper tool.
2. Remove the hinge plate pin in the float chamber and place in a tray.
3. Float need to be taken out and cleaned and to be kept in a jar with weight over it and immersed with spirit to see if there is any damage in the float.
4. Float need to be kept in the same position for some time. Place the sprit sensor paper on the circumference of the float for checking the crack.
5. Check and replace the float with new one if there is any damage.
6. Starting circuit need to be removed with proper tools and lever, starting valve, washer to be kept in a tray after removing separately.
7. Distributor passage to be removed with proper tools and its gasket to be removed and to be kept in a tray separately.
8. Take the Main jet out.
9. Remove the valve in the outlet separately.
10. Idling speed adjusting Screw spring to be kept in a tray without damage to its tip.
11. Remove the Pilot jet adjusting screw using proper tools and keep in the tray. Check for any damages without opening the throttle valve.

Servicing

1. Clean all the dismantled parts with petrol.
2. Wipe all the parts with fine cloth.
3. Clean the Small passages with fine brush.
4. Clean all the parts using low pressure air.

Inspection

1. Check the Carburettor for damages with magnifying glass
2. Replace with the new one if there is any crack or damage found
3. Check the Throttle valve for any damage.
4. Check the Main Jet with Go No Go gauge.
5. Check the Idling adjusting Screw with needle. Reject and replace with a new spare if not in good condition.

Re-Assembling

1. Assemble in the reverse process of dismantling in order.
2. While assembling gasket, replace the washer with new spares.

Conclusion

The given carburetor is examined, serviced and fixed in the engine.

AM_English_Practicals.indd 251 12/20/2019 5:50:02 PM

EXERCISE

5

OIL PUMP

EXERCISE 5

Aim

To remove the oil pump from the given engine and reassemble the same after checking and servicing.

Equipments Required

An Engine (any type)

Tools Required

1. Double End spanner set
2. Feeler gauge
3. Screw driver
4. Ring spanner set

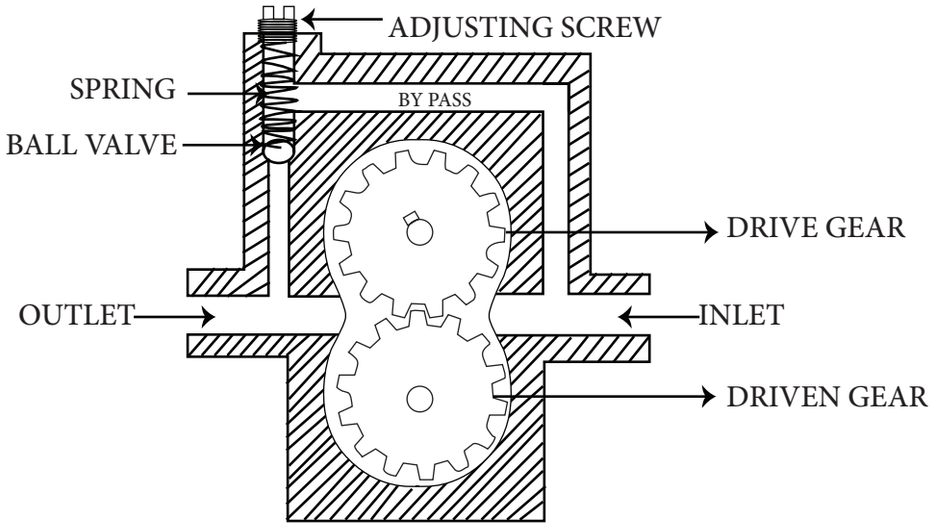

Fig 1. Gear type Oil Pump

AM_English_Practicals.indd 252 12/20/2019 5:50:02 PM

Materials Required

1. Waste Cotton
2. Kerosence
3. Degreaser
4. Lubricating Oil SAE 30
5. Emery sheet

Reasons for Dismantling

1. Low oil pressure
2. Block in oil filter
3. Loose connection in suction of oil filter
4. Hole in Oil filter
5. Company recommended period of inspection and servicing lapses

Dismantling

1. Start and run the engine up to the working temperature reaches 70^0 C.
2. Stop the engine and drain the oil from the sump after some time.
3. Remove the connections of inlet and outlet of the oil pump.
4. After removing the distributor remove the oil pump from the crankcase.
5. Dismantle Driving gear, Driven gear and all other parts and clean them by degreaser and kerosene.

Inspection

a) Gear Type Oil Pump

1. To check the damages of the gears and clean the surface by using emery sheet.
2. Check the gap between pump shafts and pump body. (Pump shaft to body clearance).
3. Check the gap between drive Gear and Pump Shaft. (Drive gear to spindle clearance).
4. Check the gap between Gear and Pump body (gear to body clearance).
5. Measure the gap between pump shaft guide to guide push clearances.

AM_English_Practicals.indd 253 12/20/2019 5:50:02 PM

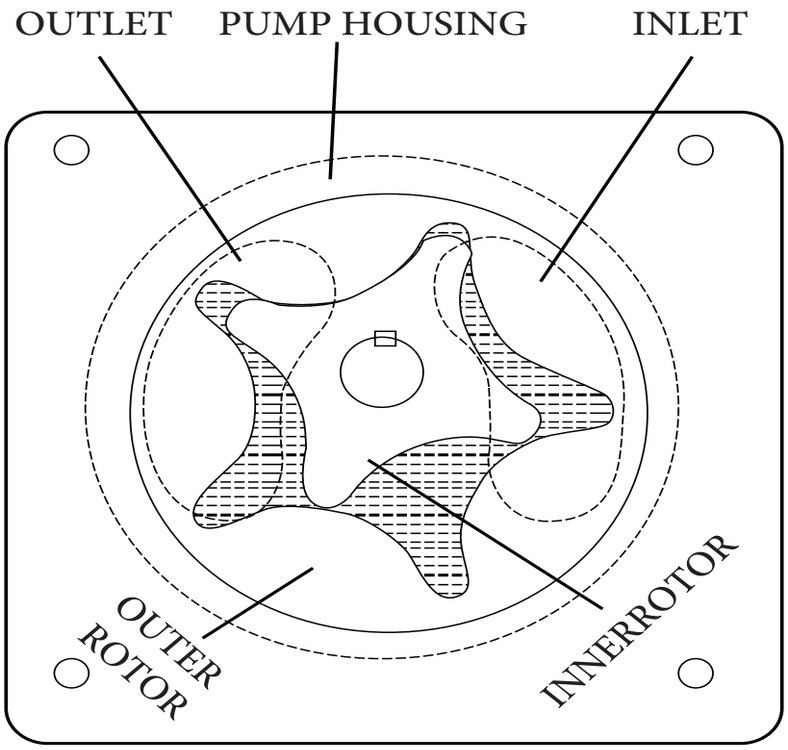

Fig 2. ROTOR type Oil Pump

b) Rotor Type Oil Pump

1. Check the gap between outer rotor body clearances.
2. Check the gap between pump shaft and rotor clearance.

Reassembling

- Reassemble the oil pump in the crankcase at the same time slowly rotate the camshaft and tight the fixing bolt.
- If pressure relief value is located in the oil pump then clean and refit the cover, spring and adjusting screw.
- After filling the oil sump with sufficient oil and start the engine. Check the oil pressure by increasing the speed of engine slowly and compare the pressure with the recommendation of the manufacturer.
- While fixing the oil pump in the crank case the camshaft is slowly rotated and fixing bolt is screwed.

AM_English_Practicals.indd 254 12/20/2019 5:50:03 PM

- If pressure relief valve is joined with the pump cover, then spring, adjusting screws need to be removed and cleaned and refitted in the correct manner.
- Start the engine after the oil sump is filled with lubricating oil. The pressure of the lubricating oil is measured by pressure gauge by increasing the engine speed and compared with recommended quantity by the company.

Precaution

- Compare the actual clearances with the recommended clearances by the manufacturer. If it exceeds the limit, pumps will not be allowed to use.
- If the gear or rotor has any breakage or crack, the pump will be rejected and new one should be replaced.

Conclusion

Fuel pump from the given engine is dismantled,examined and reassembledafter servicing.

AM_English_Practicals.indd 255 12/20/2019 5:50:03 PM

EXERCISE

6

Ac Mechanical Fuel Pump

EXERCISE 6

Aim

To dismantle the AC Mechanical fuel pump, examine and assemble it after servicing

Equipment Required

Petrol Engine.

Tools Required

1. Screw driver
2. Double end spanner set
3. Copper wire
4. Scrapper



Fig 1. Mechanical Petrol Pump

AM_English_Practicals.indd 256 12/20/2019 5:50:03 PM

Materials Required

1. Fine brush
2. Petrol
3. Cloth
4. Compressed air

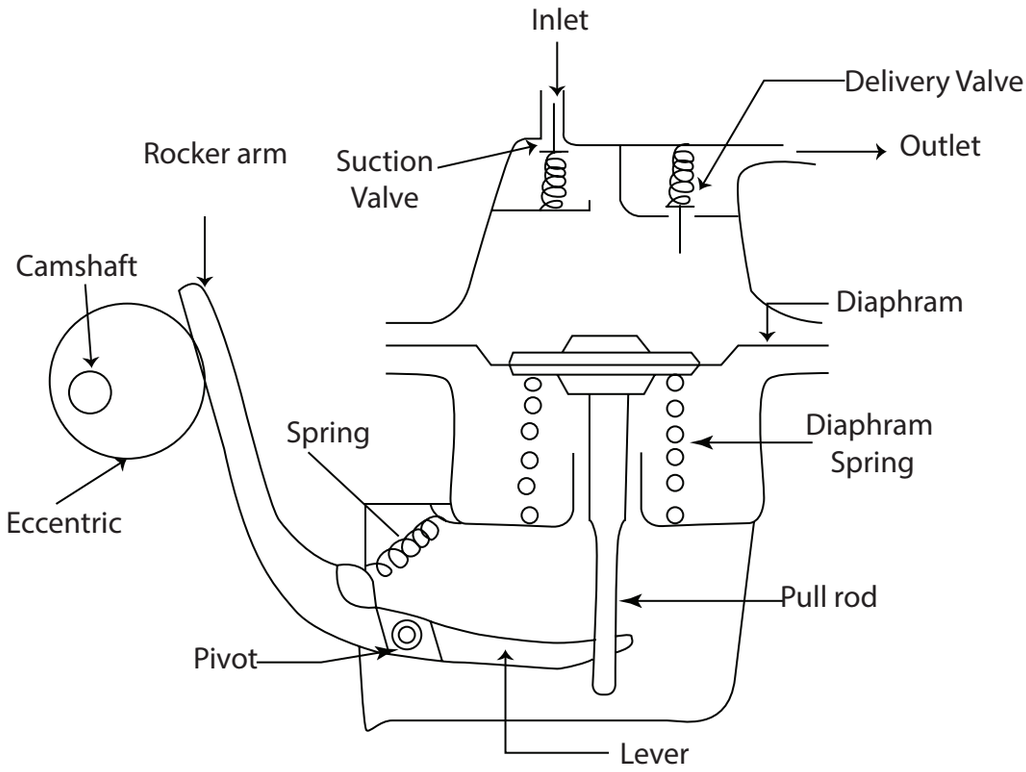

Fig 2. Mechanical Petrol Pump - Line Diagram

Reasons for Dismantling

1. No fuel supply during starting
2. Petrol leakage in the lower chamber
3. Petrol leakage in the passage hole
4. Starting trouble in the engine
5. Company recommended period of inspection and servicing lapses

Dismantling

1. All the precautions must be followed before dismantling the pump filter, valveretainer, rubber gasket, filter element which are located on the top of the pump will bekept in a tray.
2. Mark the top chamber and bottom chamber to avoid wrong fitment before dismantling the screws.

AM_English_Practicals.indd 257 12/20/2019 5:50:03 PM

3. While removing, the diaphragm may stick to the upper chamber. So required caution to be taken.
4. Remove the Grub screw joining the Rocker arm and keep separately.

Inspection and Servicing

1. Check if the filter element is damaged
2. Check if the diaphragm is damaged and if so replace it with new one.
3. Check if the inlet valve and outlet valve in the valve retainer are working well.
4. All the removed particles are cleaned with petrol using brush.
5. Check if the spring and Valve seats are damaged and if so they are replaced by new ones.

Reassembling

1. Fix the valve retainer in the right place and screw with bolt and nut.
2. By pressing the Diaphragm assemble rocker arm in the lower chamber
3. Tightly screw Rocker arm with bolt to avoid disconnection
4. Bring the holes on the Lower chamber, diaphragm and upper chamber in a straight manner. Then, join them with screws.

Conclusion

The serviced petrol pump is tested for correct measurement and pressure of pumping petrol and fixed in the engine.

AM_English_Practicals.indd 258 12/20/2019 5:50:03 PM

EXERCISE 7

SILENCER

EXERCISE 7

Aim
To dismantle, examine and refix the silencer after servicing.

Equipments Required
Any Vehicle

Tools Required
1. Double end spanner set
2. Screw driver
3. Hammer
4. Wooden Mallet
5. Hack saw frame with blade

Materials required
1. Cotton waste
2. Kerosene long rod
3. Wire brush.

Reasons for Dismantling
1. Pulling power of the engine is reduced.
2. Starting trouble in the engine.
3. Exit of black smoke from the silencer
4. Back firing & Oil leakage
5. Noisy Engine

AM_English_Practicals.indd 259 12/20/2019 5:50:03 PM

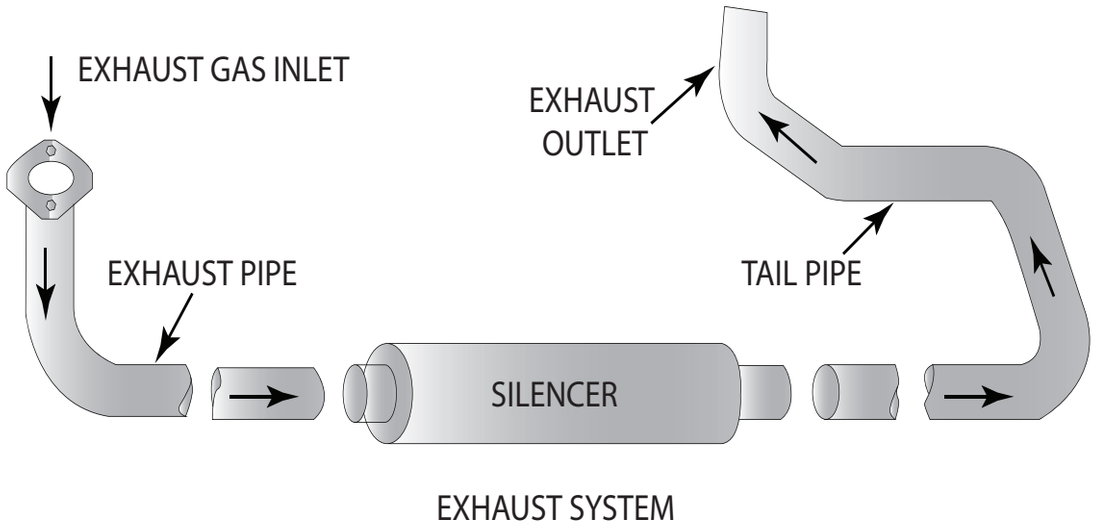

Fig 1. Silencer

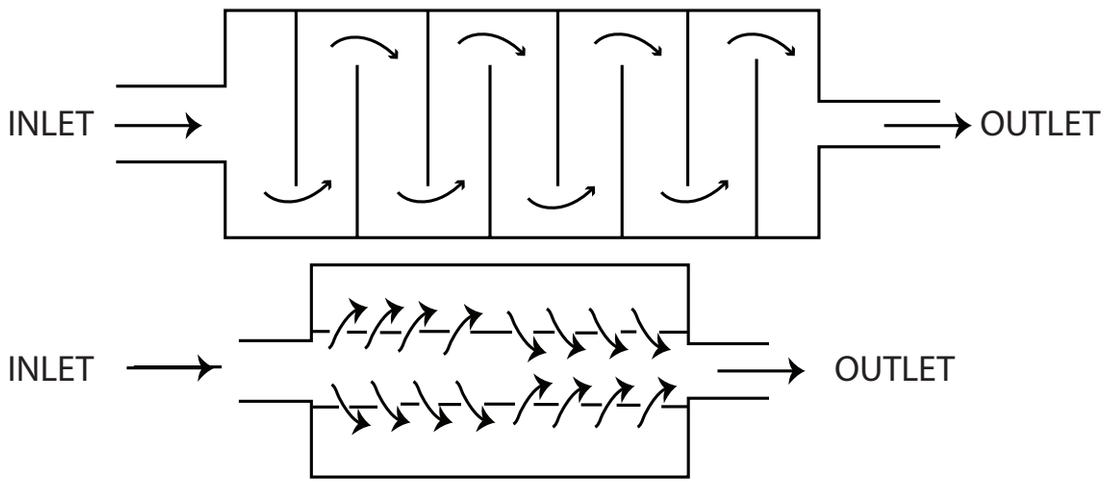

Fig 2. Silencer

Dismantling

1. Remove the Mounting bolts and clamps of the silencer.
2. Remove the Bolts from Exhaust manifold and keep separately.
3. Remove the Exhaust pipe and silencer and keep separately.
4. Using wooden mallet, hammer the sides and up and down of the silencer to remove the carbon particles which disturbs the flow.
5. Heat the Silencer well and allow it to cool for some time. Then, hammer it by mallet, move the iron rod inside the silencer to remove carbon particles.
6. Use Rod or wire brush to remove carbon particles

AM_English_Practicals.indd 260 12/20/2019 5:50:03 PM

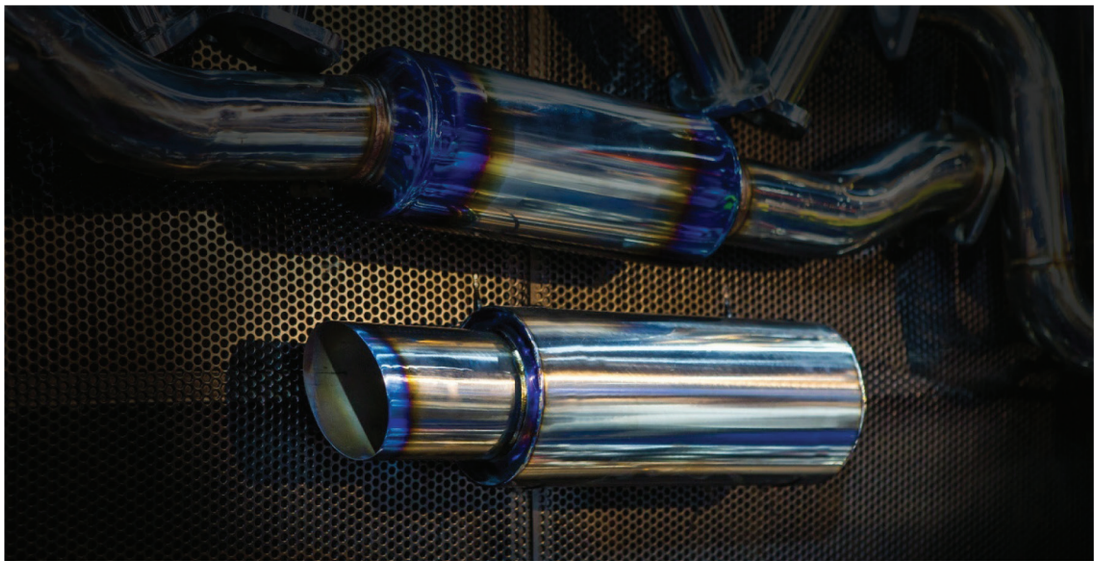

Fig 3. Silencer - Corediagram

Note

If the silencer is attached with the catalytic convertor, then service the same after knowing the type of convertor and its properties.

If the settling of carbon particles are high, then cut the silencer by Hack saw blade and welded again after servicing.

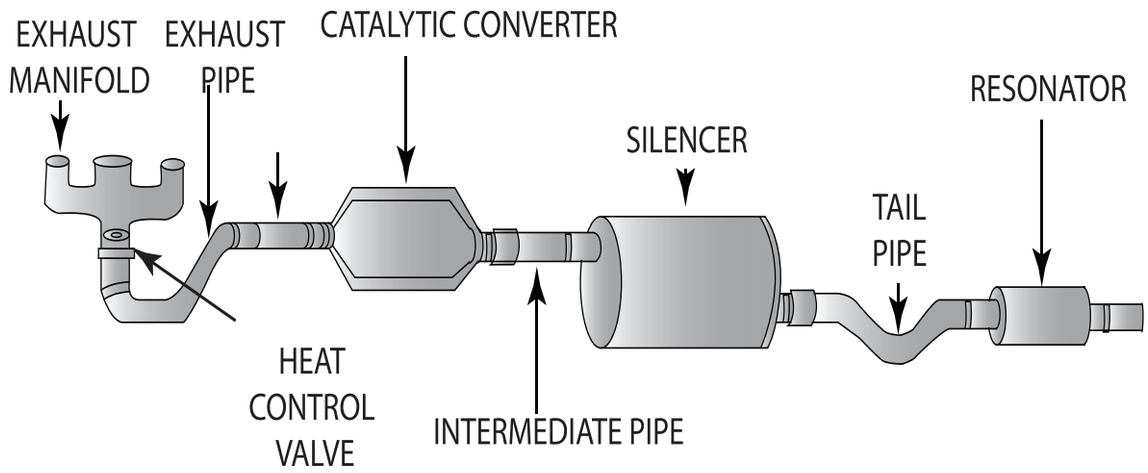

Fig 4. Catalytic Convertor type Exhaust System

Re-assembling

1. Silencer is assembled in the reverse process of dismantling the parts.
2. Silencer is fixed with new or serviced washer.

Conclusion

Silencer from the given Vehicle is serviced in the correct method and fixed.

AM_English_Practicals.indd 261 12/20/2019 5:50:03 PM

EXERCISE 8

PISTON ASSEMBLY

EXERCISE 8

Aim
To dismantle, Inspect, Service and Reassemble the Piston assembly of the engine.

Equipment Required
Any Engine

Tools Required
1. Double end Spanner
2. Ring Spanner Set
3. Outside Caliper
4. Feeler Gauge
5. Iron Hammer
6. Steel drift
7. Vernier Caliper
8. Ring Compressor and
9. Ring Expander

Materials Required
1. Cotton Waste
2. Emery Sheet

AM_English_Practicals.indd 262 12/20/2019 5:50:03 PM

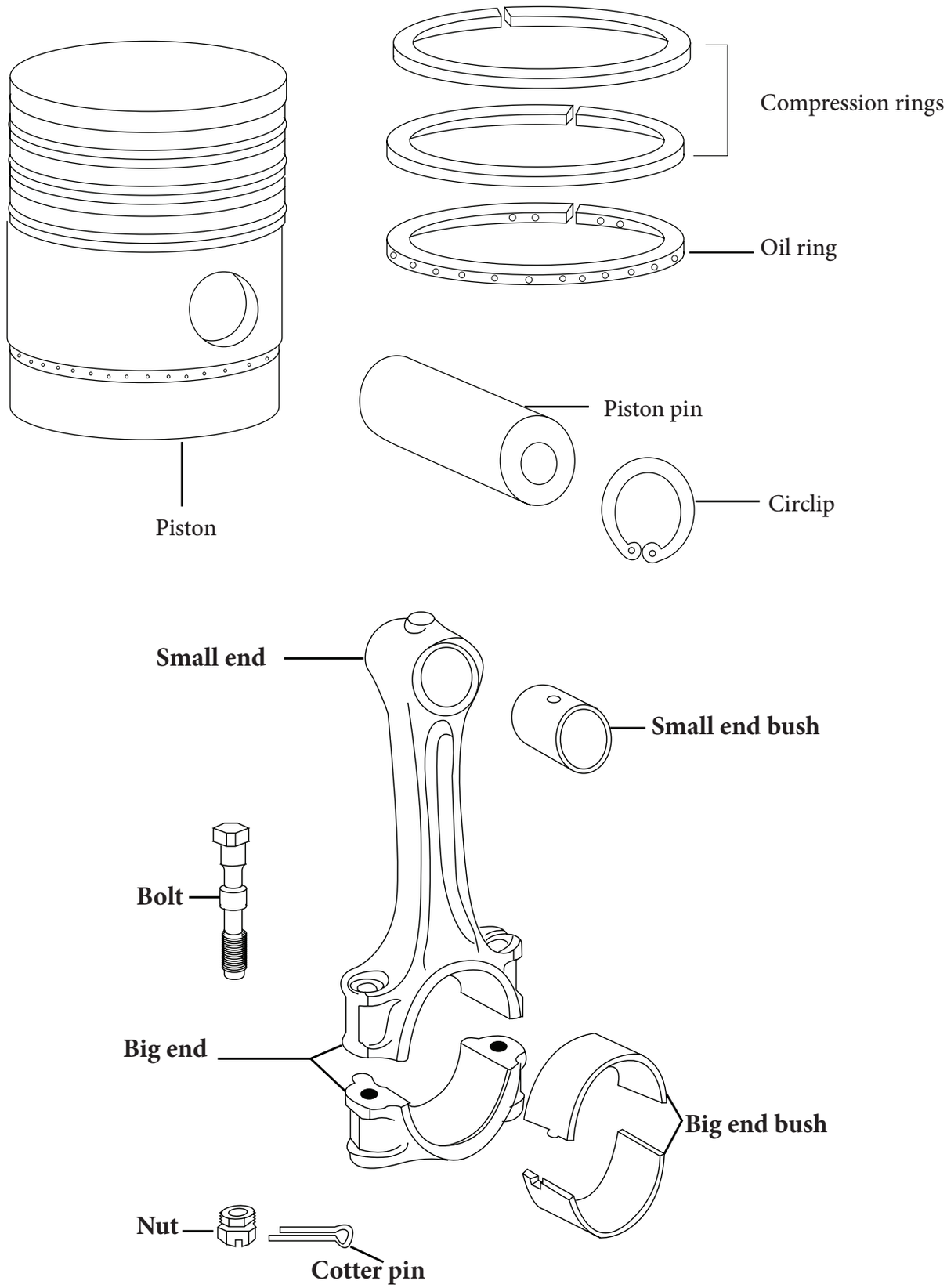

Fig 1. Piston and Connecting Rod Assembly - Line Diagram

AM_English_Practicals.indd 263 12/20/2019 5:50:04 PM

Reasons for Dismantling

1. RPM of the engine is decreased
2. BHP of the engine is decreased
3. Over Fuel Consumption
4. Reduced Compression Level in the3 cylinder
5. Outlet of Black Smoke through the Silencer
6. Consumption of Excess Lubrication Oil
7. Noisy Operation of the Engine
8. Company recommended period of inspection and servicing lapses



Fig 2. Piston and Connecting Rod Assembly

Dismantling

1. With all precautions dismantle the cylinder, Head, Crank case and keep the engine stand.
2. Mark the number on the connecting rod big end by using number punch
3. With the help of spanner ,remove the nuts of connecting big end bearing with the connecting rod and take the piston assembly through cylinder head.
4. Check if the bearing is depreciated and if so reconditionor replace the new bearing
5. Remove other piston assembly and keep it on a tray.

AM_English_Practicals.indd 264 12/20/2019 5:50:04 PM

6. Change the Piston Circlip if it is loose
7. Change Piston ring if it is depreciated
8. Use wooden mallet to fix piston assembly into the cylinder block



Fig 3. Piston and Connecting Rod Assembly

Assembling

Assemble in the reverse process of dismantling. Apply lubrication oil on the cylinder walls before fixing piston assembly to cylinder block.

Conclusion

Assemble the piston assembly in the Engine after servicing.

Note

Can do the piston assembly in the class room and practical exam with the aviability of different piston spares.

AM_English_Practicals.indd 265 12/20/2019 5:50:04 PM

EXERCISE

9

WATER PUMP

EXERCISE 9

Aim

To Dismantle, Inspect, Service and reassemble the water pump from an engine

Equipments Required

An engine

Tools Required

1. Double End spanner set
2. Puller
3. Drift punch
4. Hammer

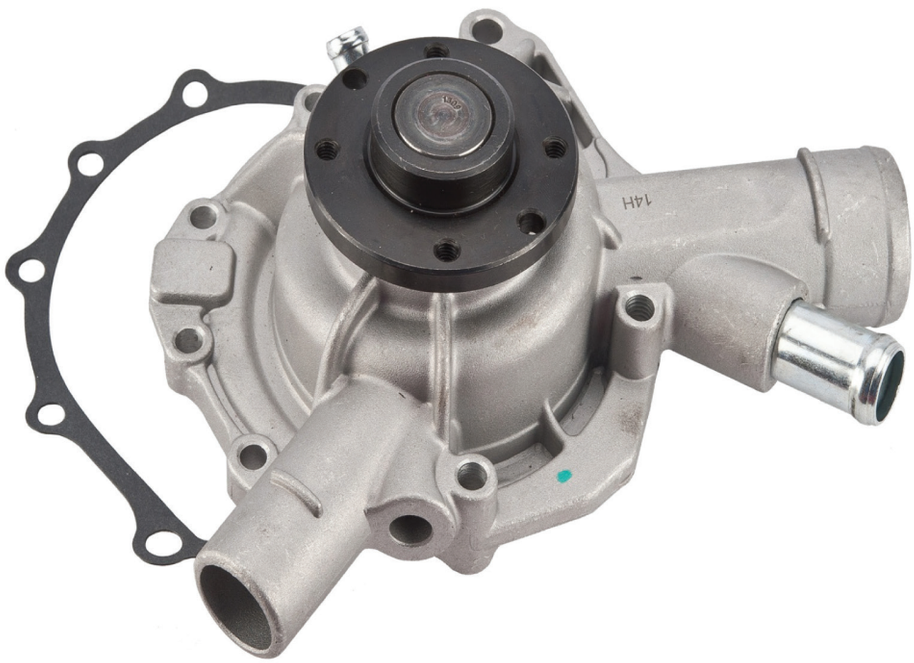

Fig 1. Water Pump

AM_English_Practicals.indd 266 12/20/2019 5:50:04 PM

Materials Required

1. Kerosene
2. Cloth

Reasons for Dismantling

1. Noise in the bearing
2. Over heat in the engine
3. Leakage of water in between Engine and water pump
4. Too loose or too tight fan belt affects water rotation
5. Time lapse as recommended by the company

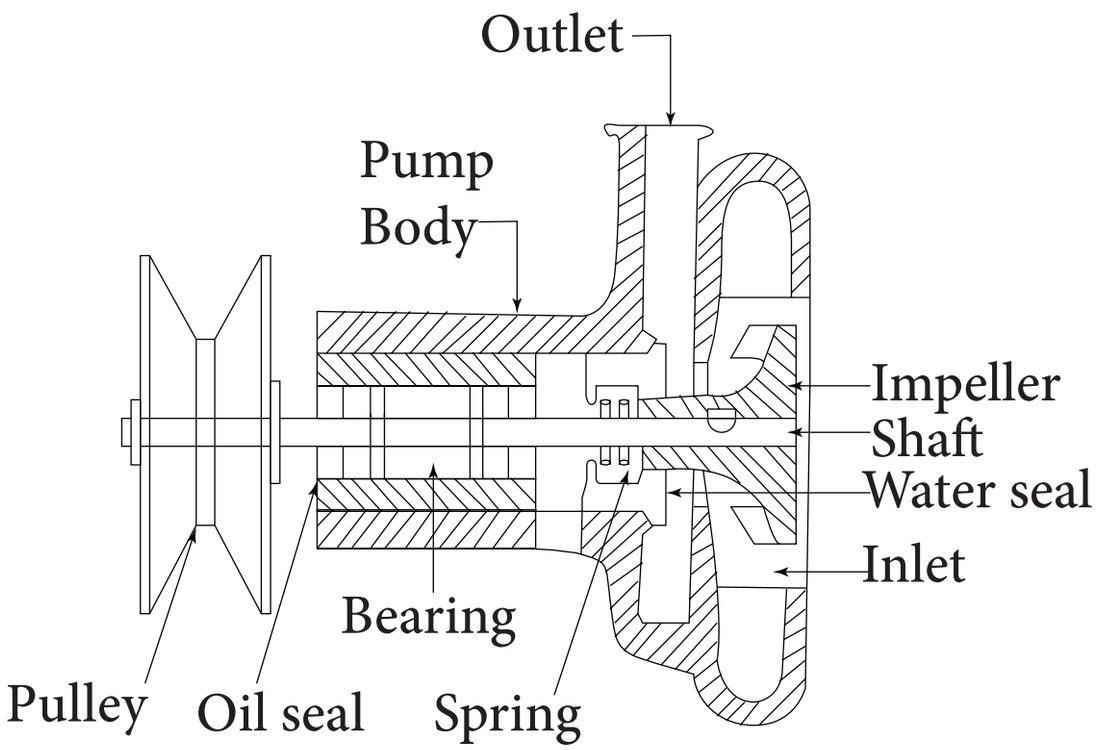

Fig 2. Water Pump - Line Diagram

Dismantling

1. Remove the rubber hose from radiator lower tank before removing the water pump
2. Remove the fan belt.
3. Remove the water in the upper part of water jacket after removing the fan.
4. Remove the dynamo.
5. Remove the water cooling pump assembly from the engine.
6. Remove the Fan belt pulley using correct tools from the water pump
7. Remove the thermostat valve.

AM_English_Practicals.indd 267 12/20/2019 5:50:04 PM

Cleaning and Inspection

1. Clean the water pump parts by using degreaser after taking out of the engine
2. Remove the pump shaft slowly by using drift pin, copper hammer and wooden mallet.
3. Check the impeller is broken
4. Check if the pump shaft shake and replace it if the shake is more.
5. Change the bearing if it is too loose.

Precaution

Before fixing the water pump replace new water seal, oil seal and gasket.

Re-assembling

Assembling is the reverse process of dismantling in the correct order.

Conclusion

After dismantling, Inspecting and servicing the water pump is fixed in the given engine.

AM_English_Practicals.indd 268 12/20/2019 5:50:04 PM

EXERCISE 10

DIESEL INJECTOR

EXERCISE 10

Aim

To Dismantle, Inspect and reassemble the diesel injector from a given diesel engine.



Fig 1. Diesel Injector

Equipments Required

Diesel Engine

Tools Required

1. Double end spanner set
2. Ring spanner set
3. Screw driver
4. Hammer

AM_English_Practicals.indd 269 12/20/2019 5:50:05 PM

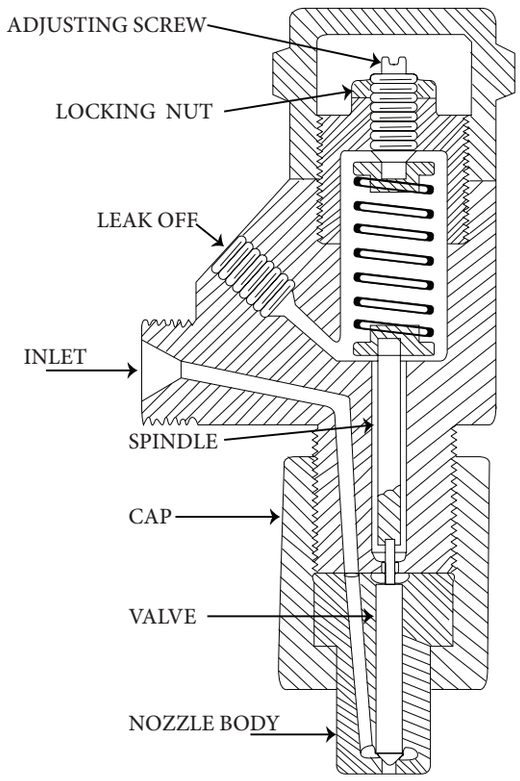

Fig 2. Diesel Injector - Line Diagram

Reasons for Dismantling

1. Low engine speed.
2. Low pulling power of engine .
3. Diesel was not injected from injector
4. Uneven speed of the engine
5. Company recommended period of inspection and servicing lapses

Removal

1. Remove the diesel tube from injection pump
2. Remove leak off pipe from the injector
3. Remove injector from cylinder head using proper spanner.
4. Put the injector on the tray and keep it in a clean and air ventilated room.

AM_English_Practicals.indd 270 12/20/2019 5:50:05 PM

Dismantling and Cleaning

1. Remove the diesel injector spindle, spring, washer, adjusting screw from injector and put on the tray.
2. Clean all the parts of injector using kerosene.
3. Again clean all the parts of injector using cloth.
4. Check any crack in the injector body and the nozzle.
5. If any crack is found change new injector.
6. Check any block in the inlet passage and leak off passage.
7. Check the bottom of the injector hole and also clean the carbon deposit.



Fig 3. Diesel Injector

Reassembling

Assemble is the reverse process of dismantling in the correct order.

Note

- After cleaning the diesel injector, again sent to the final inspection.
- The diesel injector is used after pressure test, spray test and leak off test are done.

Conclusion

After dismantling, inspecting and servicing fix the diesel injector in the engine.

AM_English_Practicals.indd 271 12/20/2019 5:50:05 PM

Class XI – Basic Automobile Engineering
Theory & Practical
List of Authors and Reviewers

Acadamic Advisor & Expert

Dr. P. Kumar,
Joint Director (Syllabus),
State Council of Educational Research and Training,
Chennai.

Domain Experts

Dr. E. Natarajan,
Prof., Dept. of Mechanical Engineering,
College of Engineering Guindy,
Anna University, Chennai.

Dr. P. Vijayabalan,
Prof., Dept. of Mechanical Engineering,
Hindustan Institute of Technology & Science,
Kelampakkam, Chennai.

Translators

Dr. M. Senthil kumar,
Associate Professor,
Department of Automobile Engineering,
MIT, Anna University, Chennai.

Dr. K. Arunachalam,
Associate Professor,
Department of Automobile Engineering,
MIT, Anna University, Chennai.

Reviewer

Dr. D. Ganesh,
Assistant Professor,
Internal Combusion Engineering Division,
CEG, Anna University, Chennai.

Authors

K. Sathiamoorthi,
Vocational Instructor,
Chennai Boys Hr. Sec. School,
Saidapet, Chennai.

R.S. Muralidharan,
Vocational Instructor,
T.V.S Hr. Sec. School, Madurai.

P.S. Payani,
Vocational Instructor,
A.A. Govt. Hr. Sec. School,
Poonamallee, Chennai.

A. Pandian,
Vocational Instructor,
Neelambal Subramaniam Hr. Sec. School, Salem.

N. Manavalan,
Vocational Instructor (Retd.),
General Cariappa Hr. Sec.School, Chennai.

P. Saravanan,
Vocational Instructor,
Neelambal Subramaniam Hr. Sec. School, Salem.

Academic Coordinators

A. Ilangovan,
Lecturer,
DIET, Thirur, Thiruvallur District.

K. Ravichandran,
P.G. Assistant,
Thanthai Periyar Govt. Hr. Sec. School,
Puzhuthivakkam, Kancheepuram District.

P. Malarvizhi,
B.T. Assistant,
PUMS, Padiyanallur, Thiruvallur District.

Art and Design Team

Layout Designing and Illustration)

Arockiam Felix, Chennai.
Student Xerox, Adayar, Chennai.

Wrapper Design

Kathir Arumugam

Quality Control

V.S. Johnsmith

Coordination

Ramesh Munisamy

EMIS Technology Team

R.M. Satheesh

State Coordinator Technical,
TN EMIS, Samagra Shiksha.

K.P. Sathya Narayana

IT Consultant,

TN EMIS, Samagra Shiksha

R. Arun Maruthi Selvan

Technical Project Consultant,

TN EMIS, Samagra Shiksha

This book has been printed on 80 G.S.M.
Elegant Maplitho paper.

Printed by offset at:

AM_English_Practicals.indd 272 12/20/2019 5:50:05 PM

NOTES

AM_English_Practicals.indd 273 12/20/2019 5:50:05 PM

NOTES

AM_English_Practicals.indd 274 12/20/2019 5:50:05 PM