GOVERNMENT OF TAMIL NADU

HIGHER SECONDARY FIRST YEAR

VOCATIONAL EDUCATION

Basic Mechanical Engineering

THEORY & PRACTICAL

A publication under Free Textbook Programme of Government of Tamil Nadu

Department of School Education

Untouchability is Inhuman and a Crime

0_BME_EM_FM_2002.indd 1 25-01-2023 13:34:24

Government of Tamil Nadu

First Edition - 2018

Revised Edition - 2019, 2022, 2023

Reprint - 2020, 2021, 2024

(Published under New Syllabus)

NOT FOR SALE

Content Creation

State Council of Educational Research and Training

© SCERT 2018

Printing & Publishing

Tamil NaduTextbook and Educational Services Corporation

www.textbooksonline.tn.nic.in

0_BME_EM_FM_2002.indd 2 26/12/2023 12:49:59

PREFACE

This book **"Basic Mechanical Engineering"** has been written entirely based on new syllabus framed by TNSCERT. The subject matter is explained in a simple manner and simple language, lightened by sufficient colourful diagrams, illustrations with learning objectives.

In each chapter, Quotes, Activities, "Do you Know" and web search link have been given to enhance the student knowledge. QR Codes, ICT Corner for the tough area of the subject are marked which helps the students to understand the subject further in detail and quickly. Line diagrams as well as 3-Dimension views are given for easy understanding. Model Question has also been included at the end of the last chapter.

We sincerely convey my thanks to the Director, Joint Director and Staff members whose patronage on this book to come out successfully and the committee of experienced Teachers who beard the responsibility of the book to come out in good shape.

In spite of all our efforts, some errors and mistakes might have crept in. Any error or misprint, if pointed out and any suggestion for the improvement of the book will be thankfully acknowledged.

Basic Mechnical Engineering has been revamped by SCERT in collaboration with Tamil Nadu Skill Development Corporation in order to get immediate employment opportunities for the vocational students in the Industrial Sectors in future. The skill certificate for practical assessment is given to every student by concerned Sector Skill Councils (SSCs) which are accredited by National Skill Development Corporation (NSDC) and TNSDC.

0_BME_EM_FM_2002.indd 3 25-01-2023 13:34:24

BRIEF CONTENTS

BASIC MECHANICAL ENGINEERING

Sl. No	Chapters	Pages	Month
1.	Workshop Engineering –Safety Precautions	1-13	June
2.	Engineering Drawing	14-41	
3.	Autocad	42-52	July
4.	Standardisation	53-59	August
5.	Foundry	60-69	
6.	Engineering Materials and Heat Treatment	70-82	September
7.	Hand Tools and Measuring Tools	83-106	October
8.	Fasteners	107-116	November
9.	Transmission of Power	117-129	December
10.	Electricity	130-137	
	Practicals	143	

RKZ12

E-book

A4W71

Assessment

0_BME_EM_FM_2002.indd 4 25-01-2023 13:34:24

CONTENTS

1. WORKSHOP ENGINEERING & SAFETY PRECAUTIONS ... 1-13

1.1. Introduction
1.2. Industries and its types
1.3. Machinist and Duties
1.4. Accidents and its causes
1.5. Safety
  1.5.1. Safety Precaution in Workshop
  1.5.2. Safety Precaution for Hand tools
  1.5.3. Safety Precaution for Machine tools
  1.5.4. Safety Precaution for Machine Operator
  1.5.5. Fire Safety
1.6. Concept of 5S
1.7. First Aid and Materials used in the First aid box
1.8. Waste Management
1.9. Environmental Management System (EMS)

2. ENGINEERING DRAWING 14-41

2.1. Introduction
  2.1.1. Importance of Engineering Drawing
2.2. Drawing Instruments
  2.2.1. Drawing board
  2.2.2. T-Square
  2.2.3. Drafter
  2.2.4. Pencils
  2.2.5. Set-Square
  2.2.6. Protractor
  2.2.7. French curves
  2.2.8. Instrument box
  2.2.9. Compass
  2.2.10. Divider
  2.2.11. Drawing Sheet
2.3. Bureau of Indian Standards
  2.3.1. Layout of drawing sheet

0_BME_EM_FM_2002.indd 5 25-01-2023 13:34:24

2.4. Lettering and Dimensioning
2.4.1. Lettering
2.4.2. Dimensioning
2.5. Scale of Drawing
2.5.1. Uses of Scales
2.5.2. Types of scales
2.6. Projection
2.6.1. Isometric View
2.6.2. Orthographic View
2.6.3. Sectional View
2.7. Blue Print Reading

3. AutoCAD 42-52
3.1. Introduction
3.2. Understanding the AutoCAD software
3.3. Important Functions
3.4. Important commands
3.5. Shortcut Keys in AutoCAD
3.6. Setup Commands
3.7. Absolute and Incremental coordinate references
3.8. Using the AutoCAD Commands
3.9. Layers in AutoCAD
3.10. Dimensioning in AutoCAD
3.11. Exporting DWG file to PDF

4. STANDARDISATION 53-59
4.1. Introduction
4.2. Standardisation
4.3. Interchangeability
4.3.1. Advantages of Interchangeability
4.3.2. Basic Terminology in Interchangeable System
4.3.3. Tolerance
4.4. Fits
4.4.1. Types of fit
4.4.2. Systems of fit
4.5. International Organisation for Standardization (ISO)
4.6. Bureau of Indian Standards

5. FOUNDRY 60-69
5.1. Introduction
5.2. Pattern

0_BME_EM_FM_2002.indd 6 25-01-2023 13:34:24

5.2.1. Pattern Materials
5.2.2. Factors for Selecting Pattern Materials
5.2.3. Types of Patterns
5.2.4. Pattern Making Allowances
5.3. Moulding
5.3.1. Moulding Tools
5.3.2. Moulding Boxes
5.3.3. Moulding Sand
5.3.4. Moulding Sand Ingredients
5.3.5. Classifications of Moulding Sand
5.3.6. Properties of Moulding Sand
5.3.7. Parting Sand
5.3.8. Gating System
5.3.9. Types of Moulding
5.4. Core

6. ENGINEERING MATERIALS AND HEAT TREATMENT.... 70-82

6.1. Introduction
6.2. Engineering Materials
6.3. Properties of Materials
6.3.1. Mechanical Properties
6.4. Metals
6.4.1. Ferrous Metal
6.4.2. Non-Ferrous Metal
6.5. Heat Treatment
6.6. Purpose of Heat Treatment
6.7. Lower and Higher Critical Temperature
6.8. Method of Heat Treatment
6.8.1. Annealing
6.8.2. Normalising
6.8.3. Hardening
6.8.4. Tempering
6.8.5. Case Hardening
6.9. Quenching
6.10. Heat Treatment Furnaces
6.11. Properties of Materials with Treatment

7. HAND TOOLS AND MEASURING TOOLS..... 83-106

7.1. Introduction
7.2. Classifications of tools
7.3. Hand Tools

0_BME_EM_FM_2002.indd 7 25-01-2023 13:34:24

7.3.1. Marking Tools
7.3.2. Holding Devices
7.3.3. Cutting or Operating Tools
7.3.4. General Tools
7.4. Measuring Tools
7.4.1. Scales
7.4.2. Calipers
7.4.3. Vernier Caliper
7.4.4. Micrometer
7.4.5. Gauges

8. FASTENERS 107-116
8.1. Introduction
8.2. Types Of Fasteners
8.2.1. Temporary Fasteners
8.2.2. Permanent Fasteners
8.2.3. Difference Between Temporary Fasteners And Permanent Fasteners
8.3. Bolts
8.3.1. Bolt Nomenclature
8.3.2. Types Of Bolts
8.4. Nuts
8.4.1. Types Of Nuts
8.5. Thread
8.5.1. Nomenclature Of Thread
8.5.2. Types Of Threads
8.5.3. Forms Of Threads
8.6. Washers
8.6.1. Uses Of Washers
8.6.2. Types Of Washers
8.7. Keys And Keyways
8.7.1. Types Of Key
8.7.2. Important Dimensions Of Keys

9. TRANSMISSION OF POWER 117-129
9.1. Introduction
9.2. Power Transmission
9.3. Belt Drive
9.3.1. Types of Belt Drive
9.3.2. Types of Belt
9.3.3. Velocity Ratio of a Belt Drive
9.3.4. Belt Slip

0_BME_EM_FM_2002.indd 8 25-01-2023 13:34:24

9.3.5. Advantages and Disadvantages
9.4. Gears
9.4.1. Forms of Gears
9.5. Gear Train
9.5.1. Velocity Ratio of Gear Drive
9.5.2. Simple Gear Train
9.5.3. Compound Gear Train
9.5.4. Advantages and Disadvantages
9.6. Abstract of Transmission of Power

10. ELECTRICITY 130-137

10.1. Introduction
10.2. Basics of Electricity
10.2.1. Voltage
10.2.2. Current
10.2.3. Resistance
10.2.4. Power
10.3. Ohm's Law
10.4. Electrical Circuit
10.4.1. Series circuit
10.4.2. Parallel Circuit
10.5. Magnetism
10.5.1. Electromagnetism
10.5.2. Magnetic Flux
10.5.3. Electro Magnetic Induction
10.6. Faraday's Laws
10.6.1. First law
10.6.2. Second law
10.7. Direction of E.M.F
10.7.1. Flemming 's Right Hand Rule
10.7.2. Flemming 's Left Hand Rule
10.8. Motors
10.8.1.Types of Motor
10.8.2.Principle of Three Phase Induction Motors
10.8.3.Basic Construction of Motor
10.9. Starter
10.9.1.Types of Starter

0_BME_EM_FM_2002.indd 9 25-01-2023 13:34:24

Basic Mechanical Engineering

THEORY

0_BME_EM_FM_2002.indd 10 25-01-2023 13:34:24

CHAPTER

1

WORKSHOP ENGINEERING AND SAFETY PRECAUTIONS

LEARNING OBJECTIVES

1. To know about Machinist, Industries, Industrial Safety Precaution, Accidents, Concept of 5S, First Aid and First Aid Materials, Waste Management, Environmental Management System (EMS)

TABLE OF CONTENT

CD1T4

1.1 Introduction
1.2 Industries
1.3 Machinist and Duties
1.4 Accidents and its causes
1.5 Safety
1.6 Concept of 5S
1.7 First Aid
1.8 Waste Management
1.9 Environmental Management System (EMS)

1.1 INTRODUCTION

- Now a day's technological revolution shows modern machineries in industries. New techniques lead to dramatic development in new machines. In order to cater to the needs of our daily life, new machines are developed in places of house, office, commercial complex and industry etc., Machines became a part of ourlife. We can see our daily life begins and ends with machines like water heater, grinder, mixer, refrigerator etc.
- In order to satisfy the rising demands of the mankind, such machines are manufactured in large number. Machinists involve themselves in the process of mass production and avert any shortfall in the demand, special trainings required to be given to machinist to make them aware of modern manufacturing techniques and special skill developing abilities.
- A machine tool is a machine which is used in manufacturing process. An industry or a factory may have many machine tools such as lathes, drilling machines, shaping machines, milling machines and grinding machines etc. It may also have several types of hand tools and cutting tools involved in the production process.

XI_BME_CHAP01_2022.indd 1 5/2/2022 4:57:21 PM

1.2 INDUSTRIES

An industry is an economic activity concerned with the processing of raw materials and manufacture of goods from raw materials. All such industries need especially skilled machinist in achieving their target in production.

TYPES

According to the range of investments and production, industries can be classified in to

1. Small scale industry
2. Medium scale industry
3. Large scale industry.

1.2 MACHINIST

A machinist can be defined as a person who has a complete knowledge of operation of various machine tools and handling of different hand tools. He makes the components or machine parts of required size and shape from various materials.



Figure 1 Machinist working on a lathe

DUTIES OF MACHINIST

- A machinist should have a complete and thorough knowledge of operating different machine tools.
- He should know how to handle various hand tools and instruments.
- He should have a complete knowledge of reading production drawings. He should understand the various notes given in the drawing and different symbols marked in the drawing. He will then analyse about the size and shape of the component or assembly, the materials used for manufacturing and method of production.
- He should operate the machine tools in a proper manner providing periodical maintenance.
- He should be able to provide appropriate cutting speed, feed and depth of cut according to the rigidity of the machine, nature of the materials used for manufacturing and the type of cutting tool used.
- He should provide wholesome support to the overall development of the industry.

1.4 ACCIDENTS

Accidents can be called as an unexpected event which takes place suddenly causing damages to human lives and materialistic loss. Accidents may occur to every- one in factories, workplace, on roads and at home. The main reason of accidents can be attributed to carelessness and not correcting some minor faults or deficiencies.

CAUSE OF ACCIDENT

In industries accidents can be avoided by placing proper attention on the activities that takes place there. Some important causes for accidents are:

- Unnecessary conversation and lack of attention on the work.

XI_BME_CHAP01_2022.indd 2 5/2/2022 4:57:22 PM

- Lack of adequate rest or sleep.
- Not possessing adequate experience in the task to be done.
- Showing sense of urgency in the work.
- Desire of making quick time money.
- Working with poor health.
- Improper handling of hand tools.
- Improper environment
- Inadequate facilities in the workplace.
- Wearing improper dress.
- Improper holding of work pieces and tools in machines.

1.5 SAFETY

Safety can be defined as an attitude to keep away damages or accidents. Industrial safety refers to the management of all operations and events within an industry in order to protect its employees and assets by minimizing hazards, risks, accidents, and near misses.

In order to prevent the loss of human lives, safety should be enforced at all costs. Safety is an attitude and working safely is a state of mind. A machinist should follow the safe working habits are important for himself and for working places.



Figure 2 Safety Materials

Safety in a workshop can be classified as follows:

1. Safety precautions in Workshop.
2. Safety precautions for Hand tools.
3. Safety precautions for Machine tools.
4. Safety precautions for Machine operator.
5. Fire Safety

1.5.1 Safety Precautions in Workshop

- Round and cylindrical objects, sharp articles and tools should not be found in pathways, it may cause injuries to the workers.
- The layout of machines, lighting and ventilation in the workshop should be done properly.
- Workshop floor has to be dry and free from Oil, water and grease.
- Inflammable materials should be kept in safe places with proper precautions.
- Hot object should be kept separately, where in messages like “HOT”, “DO NOT TOUCH” are displayed.
- First aid box containing proper medicine and emergency instruments should be kept ready in a workshop.

1.5.2 Safety Precaution for Hand tools

- Files, hammers and screw drivers with proper handles alone should be put into use.
- When hammers, chisels and punches are put into use, should be taken that any oil, grease or metal chips present on their heads are cleaned completely.

XI_BME_CHAP01_2022.indd 3 5/2/2022 4:57:22 PM

- After use measuring instruments should be kept safely in their respective covers (or) places.
- Measuring instruments should be handled properly to increase their durability.
- The hand tools should be used for the specific purpose for which they are intended. They should not be placed near machine tool when their usage is not necessary.
- Marking and measuring should not be done on rotating and moving parts.
- Tools having cutting edges like files, and scrapes should not be grouped with other hand tool when storing.

1.5.3 Safety Precaution for Machine Tool

- Proper packing pieces should be used while lifting or shifting machine tools.
- Operators should work on machines which they are familiar with. When they choose to work on unfamiliar machines, accident may take place.
- The operation parameters like feed, cutting speed and depth of cut should be selected according to the strength and rigidity of the machine tools.
- Sudden failures and defects in the machines should not be corrected or attended by the operator himself. Proper technicians should be called for repair works.
- The machines should be stopped immediately if any abnormal sound comes from them.
- Notice board plate showing the message "The Machine Out Of Order" should be placed near the machines, which are breakdown or under repair.
- The operator should not change the speed (or) lubricates when the machine is still functioning.
- The machine tools should be maintained properly. It should be monitored regularly for scheduled maintenance.

1.5.4 Safety Precaution for Machine Operator

- Operator should not wear ties and bows while working.
- Operator should not wear small towel or clothes around his neck or on shoulders.
- Operators should not rest his body on the machines during the operating time.
- Operator should wear tight clothes and avoid wearing loose dresses
- While operations like grinding, welding and chiseling, the operator should wear safety goggles.
- The operator should wear gloves while handling hot and sharp articles.
- Operators should wear only leather shoes.
- The operator should not touch unsafe and un-insulated electrical wires.

XI_BME_CHAP01_2022.indd 4 5/2/2022 4:57:22 PM



Figure 3 Safety Materials

- operator should seek the help of others while handling heavy and fragile materials.
- Safety plates and equipment should be installed before the machine.
- Strict code of discipline should be followed in the workshop. Running, playing and chatting with others are to be avoided in the workshop.
- The operator should wear earplug, helmet and mask while performing the machining operations.
- The operator should know about the "FIRST AID"

1.5.5 Fire Safety

Fire safety is the set of practices intended to reduce the destruction caused by fire. Fire safety measures include those that are intended to prevent ignition of an uncontrolled fire, and those that are used to limit the development and effects of a fire after it starts.

XI_BME_CHAP01_2022.indd 5 5/2/2022 4:57:22 PM

Fire extinguisher is a portable device that discharges a jet of water, foam, gas, or other material to extinguish a fire.

Class A fire extinguishers: Class A fire extinguishers are used for ordinary combustibles, such as paper, wood, cloth, and some types of plastic. These extinguishers typically use water or certain types of dry chemicals to either absorb heat or coat the fire.

Class B fire extinguishers: Fires that originate from flammable liquids and gas can be extinguished by a class B fire extinguisher. This is the type of extinguisher you want to use on a fire caused by oil or fuel.



Figure 4 Fire Extinguishers

Class C fire extinguishers: Class C fire extinguishers are effective against electrical fires from live wires, panels, and circuit breakers. The extinguisher works by releasing materials that stop the conduction of electricity.

Class D fire extinguishers: Class D fire extinguishers are used on combustible metals. These include magnesium, sodium, aluminium, and titanium.

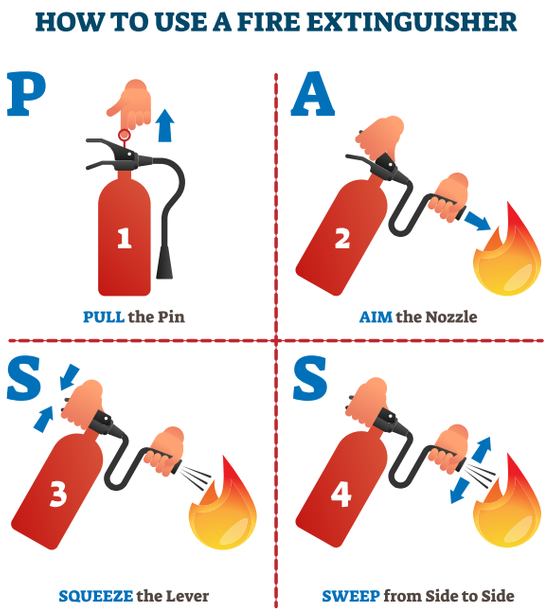

Figure 5 How to use a Fire Extinguisher

1.6 CONCEPT OF 5S

5S system is one of the Lean Manufacturing tools for organizing workplace that results in a clean, uncluttered and safe working environment. 5S helps to reduce waste, reduce accident and to optimize productivity. 5S originated as a part of Toyota Production System (TPS).

Focus of 5S:

5S system focuses on giving a place for everything and putting everything in its place. Simply,

> **"A Place for Everything and Everything in its Place"**

Need for 5S:

Practicing the 5S system keeps the workplace clean and well organized which makes it easier for people to do their jobs with minimal effort without wasting time and without injury.

XI_BME_CHAP01_2022.indd 6 5/2/2022 4:57:24 PM

If the workplace is not clean and organized, achieving good results consistently will become difficult in long term.

5S Steps:

Step Number	Step Name in English Meaning of 'S'
1S	Sort
2S	Set in order
3S	Shine
4S	Standardize
5S	Sustain

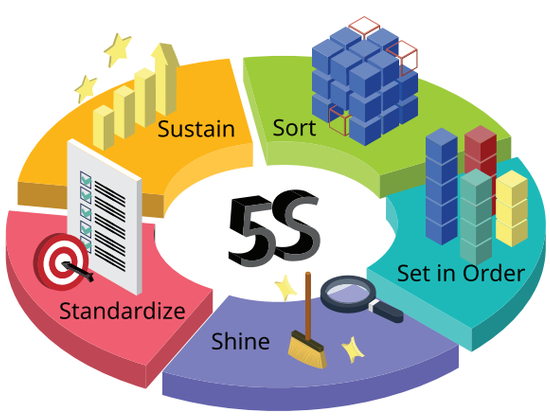

Step 1S: Sort

Sort involves looking through all the available items and then separate what is needed and not needed. Keep the needed items for further action and dispose the not needed items accordingly. The available items may be tools, equipment, materials, manuals etc.

To do the "Sort" step easier we can ask these questions:

a. What is the purpose of this item?
b. Are we using this item frequently?
c. Who uses this item?
d. When we had used this item last?
e. What is the need for the item to be placed here?

Answers for the above questions will give the clear purpose of each item. Now we exactly know which items are needed here and those not needed items can be disposed accordingly.

Step 2S: Set in order

As we had executed the "Sort" step, we now have needed items only.

Now organize the needed items in an order related to process, people, frequency of usage, weight of item, size and shape of item etc.

To do "Set in order" easily, we can ask these questions,

a. Which items are used most frequently?
b. Who uses these items?
c. When the items are used?
d. Any grouping of items are required?
e. Any process sequence to be followed?
f. Any need for storage containers? If yes, what will be the quantity?
g. Is there any containers required? Mention size of the containers

Answers for the above questions will give us the optimized arrangement order which covers tasks, frequency of tasks, people movement path, height of storage, weight of item etc.

At the end of second step, the necessary items alone are stored in a well- organized manner that makes us to identify the item and pick the item easily for use with minimum effort.

XI_BME_CHAP01_2022.indd 7 5/2/2022 4:57:24 PM

Step 3S: Shine

This step of 5S focuses on cleaning the work area on regular basis (daily) before starting the work. This includes cleaning of tools, equipment, machines, worktables, computers, printers, sweeping of shop floor etc.

While doing this regularly, the items will be always clean and in addition to that it will help us identify and correct any abnormalities like loosened nut, damaged electric wire, cracks etc. which will reduce the accidents.

Step 4S: Standardize

In this step, what are all changes done in the sort, set in order and shine steps will be added to the Standard Operating Procedure (SOP). By doing so, it is made compulsory to follow the defined steps on regular basis.

Standardize systemizes everything happened earlier and converts one time effort in to a routine duty.

Step 5S: Sustain

Sustain is about making 5S a part of organization's culture. It will form a habit of following sort, set in order, shine and standardize steps regularly.

Sustain ensures that everyone in the organization from top management to bottom line management is involved in following 5S steps, so that company will start producing continuous positive results. Sustain assigns responsibility to each and every person and tracks the progress on continuous basis.

Benefits of 5S:

a. Safe work environment
b. Lesser efforts and fatigue to people
c. Increased production
d. Lower rejection
e. Reduced costs
f. Higher equipment availability
g. Improved employee morale
h. Increased customer satisfaction

Note

Actually 5S originated in the automobile manufacturing industry (Toyota). On realizing the benefits of practicing 5S, other manufacturing industries like health care, educational institutions, offices, kitchens etc. started to follow 5S concept.

1.7 FIRST AID

So far, we have discussed about various factors to enforce safety and avoid accidents. At some times, the focus on safety may be missing due to some reason. In such circumstances, accidents may be happen causing liabilities to the industry as well as the operator.

Accidents may happen at any time in a workshop. The affected or injured person should be provided with immediate medical attention before he is taken to a hospital. This treatment which is given on the spot is known as first aid.

Every industry (or) a workshop should be equipped with a doctor or a first aid assistant. Apart from this, all the operators should be given proper training in first aid.

XI_BME_CHAP01_2022.indd 8 5/2/2022 4:57:24 PM



Figure 5 First Aid

These measures will avoid heavy losses of lives. Every workshop should have a first aid box. Which contains with proper medicine and instruments.

1.7.1 Materials to be found in a First aid box

1. Iodine
2. Tincture of Benzene
3. Dettol
4. Burnol
5. Boric Powder
6. Meshed Cloth
7. Cotton
8. Plaster
9. Small Scissor
10. Knife
11. Small Wooden Stripes
12. Basin for Washing Eyes
13. Broad Based Beaker for Mixing Medicine



Figure 6 Materials in First Aid Box

1.8 WASTE MANAGEMENT

Waste is anything that is left out after any process.

Example:

a. Tea powder will be left out after making tea.
b. Metal chips will be left out after machining.
c. Contaminated water will be left out after washing a vehicle with water.
d. Polythene covers will be left out after consuming the packed contents.

Management

Management is the art and science of managing resources. Simply it is the process of dealing with anything (Peoples, materials, tools, equipment, machines etc.).

Waste management

Waste management is the art and science of managing wastes. Simply it is the process of dealing with wastes from its beginning point to its final disposal without contaminating environment.

Contamination

Contamination is the presence of unnatural substances at varying levels or concentrations.

Pollution

If the contamination causes harm to anything (human beings, other organisms, materials, structures etc.), then it is called as pollution.

For better understanding, All contaminations are not pollutions; but all pollutions have contaminations at higher levels/concentrations.

XI_BME_CHAP01_2022.indd 9 5/2/2022 4:57:24 PM

Hierarchy of wastes:

Generally referred as 3R,

Reduce,Reuse, Recycle.



Reduce: Designing a product and processes in order to reduce the waste generation during manufacturing. Reduce also includes reduction of usage.

Reuse: Reusing anything for its intended original purpose (refilling etc.) or for a different purpose.

Recycle: Recycling involves converting waste in to any useful thing by processing.

Biodegradable waste: It is defined as a waste that can be decomposed by natural agents and will not create pollution.

Example: left out vegetables, fruits, papers etc.

Non-biodegradable waste: It is defined as a waste that cannot be decomposed by natural agents.

Example: Plastic items, polythene carry bags etc.

Hazardous waste: It is defined as a waste that are having dangerous properties and will be harmful for the living beings (humans, animal etc.)

Example: Nuclear & Chemical wastes, Leather industries wastes Paint thinners, diapers etc.

Non Hazardous waste: If the waste is not harmful for the living beings, then it is called as Non-hazardous waste.

Example: glass, cardboard etc.

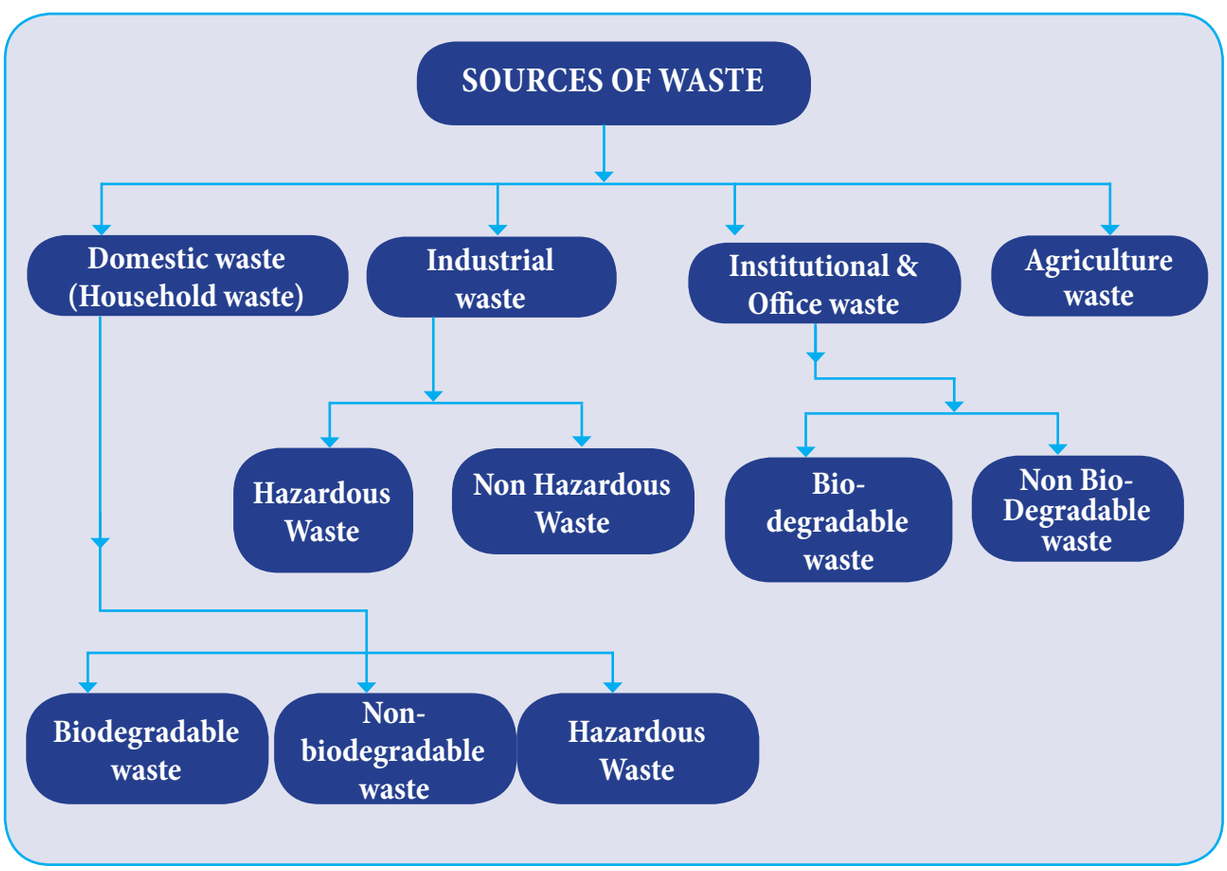

XI_BME_CHAP01_2022.indd 10 5/2/2022 4:57:24 PM

> **Note**
>
> In addition to the above, wastes can be further classified in to solid waste, liquid waste, gaseous waste, dry waste and wet waste.

Colour code:

Colour coding system is followed to collect and process the different type of wastes.

Colour Code	Bin	Used to Collect
Red		Non-biodegradable waste and hazardous waste
Green		Biodegradable wastes.
Yellow		Glass etc.
Black		E-Wastes
Blue		Metal etc.

1.9 ENVIRONMENTAL MANAGEMENT SYSTEM (EMS)

All industries have started following Environmental management System (EMS) in order to reduce contamination and pollution caused as a result of their operations.

ISO 14001 is the standard of EMS. Current edition is 2015. So, we can call as Environmental Management System (EMS) or ISO 14001:2015 standard. ISO stands for International Organization for Standardisation.

The purpose of this ISO 14001:2015 standard is to provide organisations with framework that can protect the environment and to respond to changing environmental conditions. It follows PDCA model. P stands for Plan, D stands for Do, C stands for Check and A stands for Act.

PDCA Model

This model can be applied to EMS and each of its individual elements.

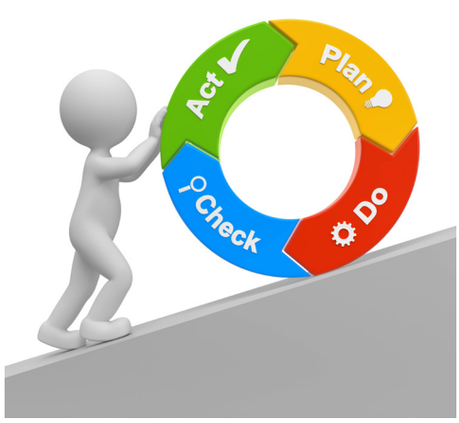

Plan: Create Environmental Policy. Identify the aspects that affects environment. Fix objectives and targets to process further.

Do: Execute and Implement the planned process.

Check: Monitor, Measure, Check and Review what is done. Compare results in line with planned objectives and targets.

Act: Take necessary action continuously to reduce the environment pollution.

XI_BME_CHAP01_2022.indd 11 5/2/2022 4:57:26 PM

Note

Environmental Policy of a government or non-government organisation is nothing but the commitment by an organisation to strictly follow the environmental laws, policies and regulations without any deviation. It will differ from one organisation to another based on their processes.

Glossary

1. Revolution – புரட்சி
2. Technique – நுட்பம்
3. Modern – நவீன
4. Accident – விபத்து
5. Safety – பாதுகாப்பு
6. First Aid – முதலுதவி
7. Workshop – பணிமனை
8. Gross Domestic Product (GDP) – உள்நாட்டு மொத்த உற்பத்தி
9. Environment – சுற்றுச்சூழல்
10. Precautions – முன்னெச்சரிக்கை

Activities

1. Make the First Aid Box.
2. How do you give First Aid for burning accident? Explain and give the report.
3. Follow 5S steps daily in your school bag. Your daily periods will be a combination of theory and practical that follows a specific sequence every day. So you need to follow that period sequence for the day to organize the textbooks, note books, pencil box etc. Keep the schoolbag clean and well organized by following 5S.

QUESTIONS

Z7LDU

PART A

I. Choose the correct option :

1. The person who manufactures different parts is
   a. Supervisor
   b. Machinist
   c. Manager
   d. Foreman
2. What kind of safety rule while the operator rest his body on the running of the machine
   a. Workshop safety precaution
   b. Safety precaution for hand tools
   c. Safety precaution for machine tools
   d. Safety precaution for operators

XI_BME_CHAP01_2022.indd 12 5/2/2022 4:57:26 PM

3. First Aid is
   a. A manufacturing process.
   b. Safety regarding operators.
   c. Immediate treatment given at the spot of accidents.
   d. Breakdown of machines.

4. The packing pieces are used at the time of
   a. Running of the machine.
   b. While stopping the machine.
   c. While lifting (or) shifting machine tools.
   d. While fitting the machine tools.

PART B

II. Answer the following questions in one or two sentences:

5. How Industries are classified?
6. Who is Machinist?
7. What is safety?
8. What is the classification of safety Precautions?
9. What is known as First Aid?
10. List out the Materials in a First Aid box?
11. Define 5S and focus of 5S.
12. Define Contamination and Pollution
13. List the hierarchy of wastes and explain.
14. Define waste and waste management.
15. Expand EMS and state the ISO standard for EMS.

PART C

III Answer the following questions in about a page

16. What are the main causes for accident?
17. List out the safety Precautions regarding hand tools.
18. What are the safety Precautions for machines?
19. List out the safety Precautions for operators.
20. List the 5S steps.
21. List the different coloured bins for collection of waste and their uses.
22. Define PDCA model.

PART D

IV. Answer the following questions in detail:

23. Explain the duties and important role in development of country of a machinist.
24. List the 5S steps in English language and explain each steps.
25. Explain Sources of waste with flowchart.

XI_BME_CHAP01_2022.indd 13 5/2/2022 4:57:26 PM

CHAPTER

2

ENGINEERING DRAWING

LEARNING OBJECTIVES

1. To know about the engineering drawing and there importance.
2. To know and able to use of instruments and materials use in engineering drawing.
3. To know about the dimensioning, lettering and numbering the drawing.
4. To know about view and projections of engineering drawing.
5. Able to draw the basic mechanical drawings.

TABLE OF CONTENT

2.1. Introduction
2.2. Drawing Instruments
2.3. Bureau of Indian Standards
2.4. Lettering and Dimensioning
2.5. Scale of Drawing
2.6. Projection
2.7. Blue Print Reading

6.1 INTRODUCTION

- Engineering drawing is an effective method of communication between engineers belonging to various disciplines of engineering. All necessary features of an objects are mentioned on the drawing with proper dimensioning and important remarks. The entire community of engineers can analyse the object for its correctness, accuracy of the object's design and modifications. As all the production related remarks and instructions are graphically expressed in the drawing, it is easy for the production process to be carried out.
- Engineering drawing is the language of engineers. This language is spoken, read and written in their own way. It is used as a means of communicating ideas, concepts and designs to all the others involved in the process of production.

XI_BME_CHAP02_2022.indd 14 25-01-2023 13:14:23

2.1.1. Importance of Engineering Drawing

It is not possible to explain all the details of objects orally irrespective of the size of the object (very small to large). Some of the details may be left out, misrepresented or misunderstood.

There may be some difficulty in understanding oral communication because of the languages spoken by the individuals. Considering such difficulties, drawings are used to communicate with people from different levels in the field of engineering (from engineers to workers). They can understand the drawing and help manufacture new components. Another distinct advantage is that the details are protected for further reference.

As there is a define grammar for a language and rules and regulations for games and sports, there is definition for a drawing.

Each and every symbol, line, letter and numbers has its unique meaning. Drawing should be made with these definitions in mind. Same methods are to be followed in making drawings for them to be accepted and understood all over the world.

2.2. DRAWING INSTRUMENTS

Proper equipments and instruments must be used for making drawings. Following are the instruments required for preparing drawings.

1. Drawing board
2. T - square
3. Drafter
4. Pencils and pencil leads
5. Scales
6. Set squares
7. Protractor
8. French curves
9. Instrument Box
10. Drawing sheets

2.2.1. Drawing board

A drawing board is a well-seasoned soft wooden board of an approximate thickness of 20mm. A straight ebony strip is fitted on the left edge of the board to support the movement of the T-square.

The top surface of the drawing board should be flat and smooth and the thickness uniform B.I.S (Bureau of Indian Standards) has standardized the sizes of drawing board as follows.

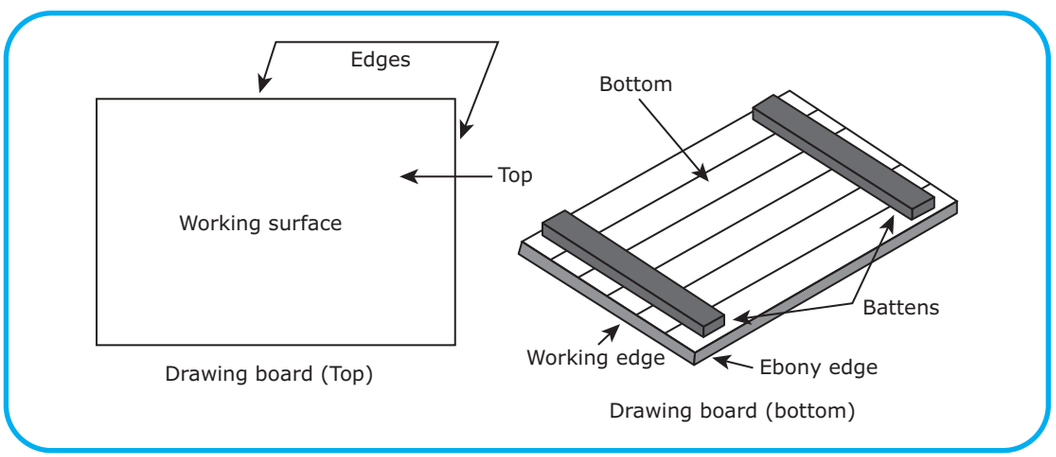

Figure 1 Drawing board

XI_BME_CHAP02_2022.indd 15 25-01-2023 13:14:23

SI. NO	Desig-nation	Size in mm L x W x T	Size of sheet
1	D0	1500 X 1000 X 25	A0
2	D1	1000 X 700 X 25	A1
3	D2	700 X 500 X 15	A2
4	D3	500 X 350 X 15	A3

2.2.2. T-Square

T -square is an instrument used to draw horizontal lines parallel to each other. When used along with set- square, it is used as a base to draw various angles.

There are two parts of a T-square namely stock and blade. These two parts are connected at right angle (90°) to each other. Stock is the piece that supports the blade by attaching it to the ebony of the drawing board.

The working length of the T -square is approximately equal to the length of the drawing board. T-square is illustrate in figure

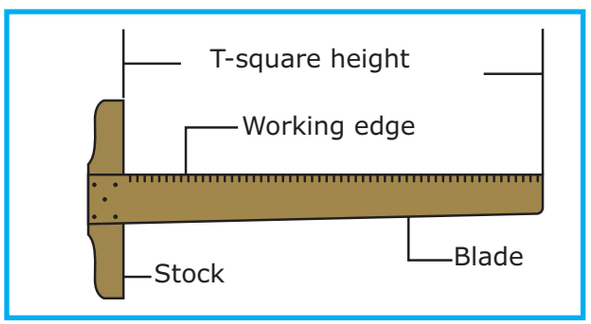

Figure 2 T-Square

SI. No	Designation	Length of the working edge of the blade in mm
1	T0	1500 x 10
2	T1	1000 x 10
3	T2	700 x 5
4	T3	500 x 5

2.2.3. Drafter

It comprises of a pair of steel strips hinged at the center .At one end, a clamp is provided. This clamp is useful in clamping the drafter at the left side top corner of the drawing board .The other end is known as working end which consists of the two perpendicular scales and circular base. The perpendicular scales are graduated in millimetres whereas circular scale is graduated in degrees up to 360°.The working end can be oriented to any angle and fixed at the position with help of knob.

When the clamping end is fitted to the drawing board, the working end can be made to slide over the board. After the perpendicular scales are set at the desired angle, parallel or perpendicular lines can be drawn. Taking reference from the circular scale, line at any desired can also be drawn. Mni Drafter is illustrated in figure.

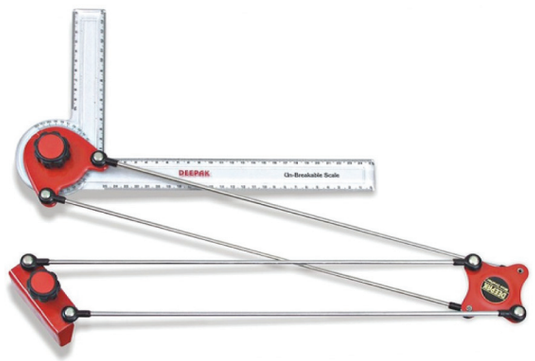

Figure 3 Mini Drafter

2.2.4 Pencils and Pencil leads

Pencils are used for making drawings on drawing sheets. The quality of the pencil determines the accuracy and appearance of the drawing. The grades of pencil are designated by marking made on each of them. The grade of pencil describes the hardness of the graphite lead used. The grades of pencil range from 9H to 9B, where 9H is the hardest

XI_BME_CHAP02_2022.indd 16 25-01-2023 13:14:23

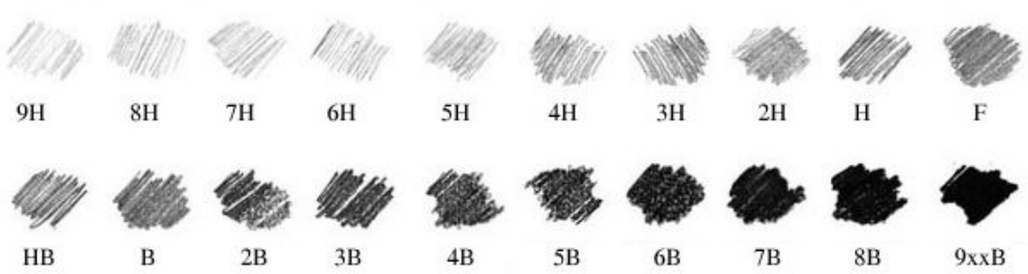

Figure 4 Grade of Pencil

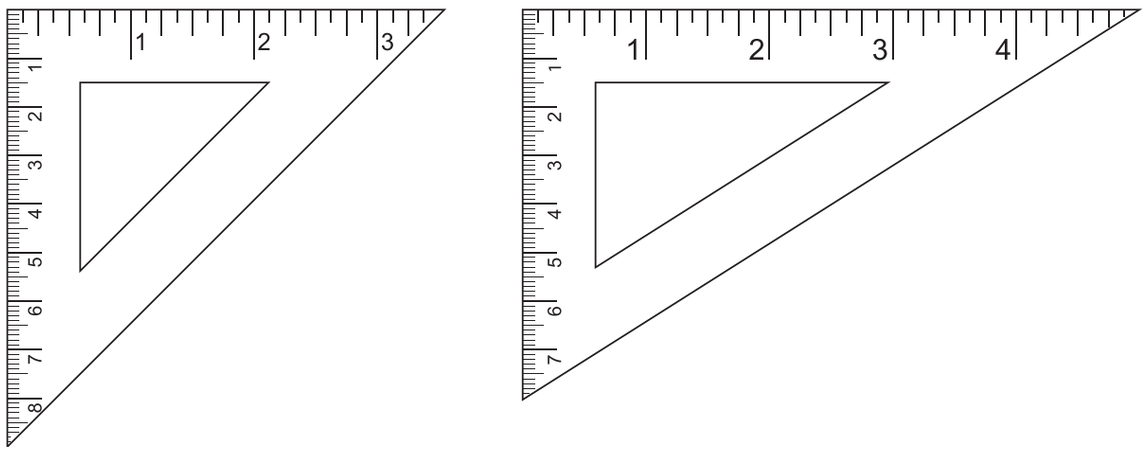

Figure 5 Set Square

and 9B is the softest. Hard pencils such as 2H, H are used for making engineering drawing and for lettering and dimensioning, softer pencils like HB pencils are used, also used for making freehand sketches.

The grades of the pencil may be categorized as

- Soft - 9B to 2B
- Medium - B to 3H
- Hard - 4H to 9H

2.2.5. Set-Square

Set-square are useful in drawing perpendicular lines and lines at 30°, 45°, 60° and 90° to the horizontal lines drawn with T-square. By the combined use of two Set-square, we can also draw lines at 15°, 75° and 105° to the horizontal line.

There are two types of Set-square

1. Thirty -Sixty (30°-60°)
2. Forty five (45°)

2.2.6. Protractor

Protractor are used to measure or construct angles which cannot be done by Set-square. The shape of the protractor may be circular or semi- circular. They are made of celluloid, wood or ivory.

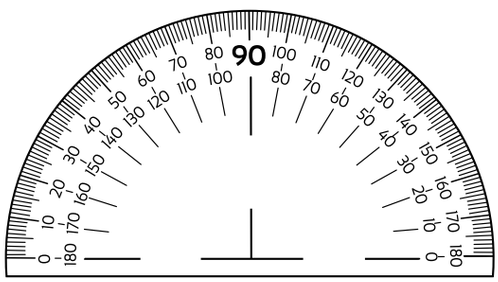

Figure 6 Protractor

XI_BME_CHAP02_2022.indd 17 25-01-2023 13:14:23

2.2.7. French curves

French curves are the templates, profiles and contours of different shapes and sizes are cut on the edges of French curves. Curve lines and circular arcs which cannot be drawn with a compass can quickly be drawn with French curve. Figure illustrate French curves

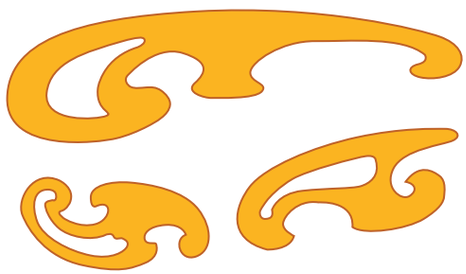

Figure 7 French Curves

2.2.8. Instrument box

The instrument box contains different drawing instruments for drawing different types of drawings. The instruments are

1. Large Size Compass
2. Small Bow Compass
3. Small Ink Bow Compass
4. Large Size Divider
5. Small Bow Divider
6. Lengthening Bar
7. Lead Case

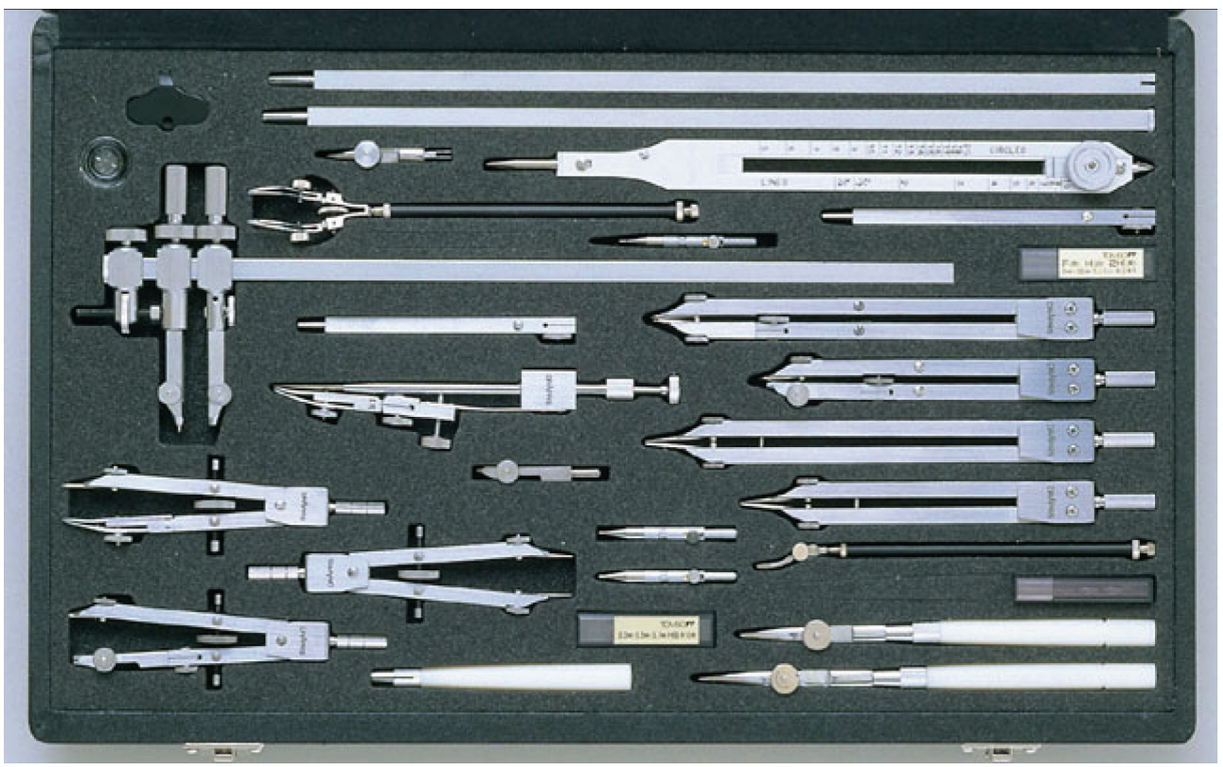

Figure 8 Instrument Box

2.2.9. Compass

Compass are used for the drawing circles and arcs of required sizes. It has two metals legs joined at the top with help of a knee joint. One of the two legs is fitted with an adjustable needle. The other leg has an attachment which can hold an inking device (or) a pencil lead tip.

XI_BME_CHAP02_2022.indd 18 25-01-2023 13:14:24



Figure 9 Compass

2.2.10. Divider

Straight lines or curved lines are divided into required number of equal parts with help of dividers.

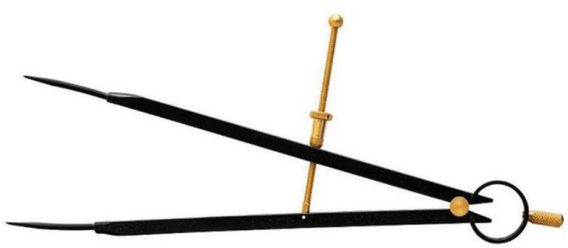

Figure 10 Divider

2.2.11. Drawing Sheet

Different qualities of drawing sheets used for making drawings. The quality of the sheet depends upon the nature of drawing. It should be tough, strong and uniform thickness. The effect of erasing should not be felt and ink should not spread out. The smooth side of the sheet should always be used for drawing.

The standards sizes of trimmed drawing sheets recommended by International Organisation for Standardization (ISO) and adopted by Bureau of Indian Standards (BIS).

XI_BME_CHAP02_2022.indd 19 25-01-2023 13:14:24

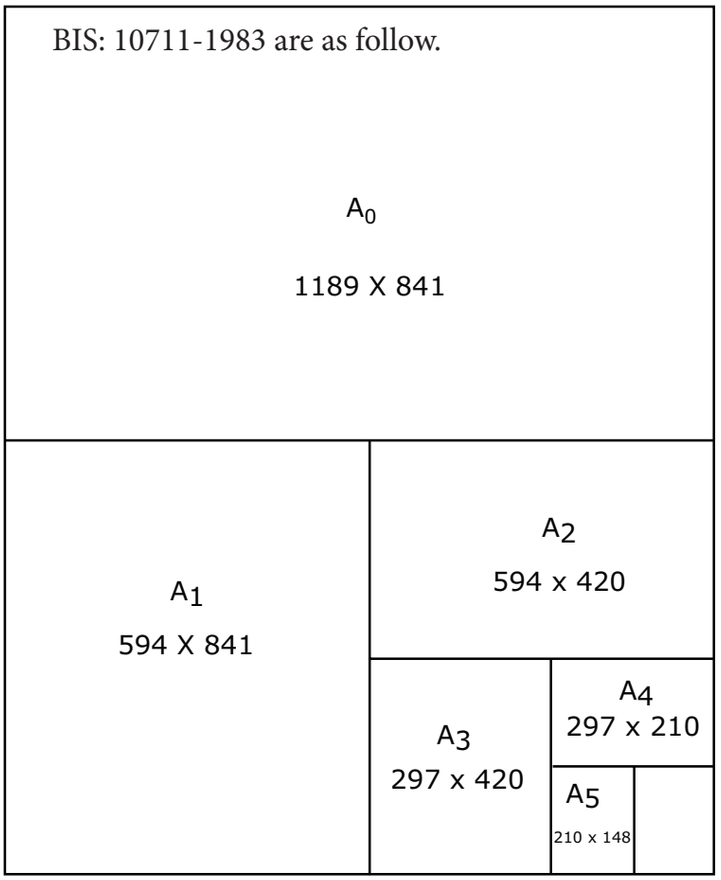

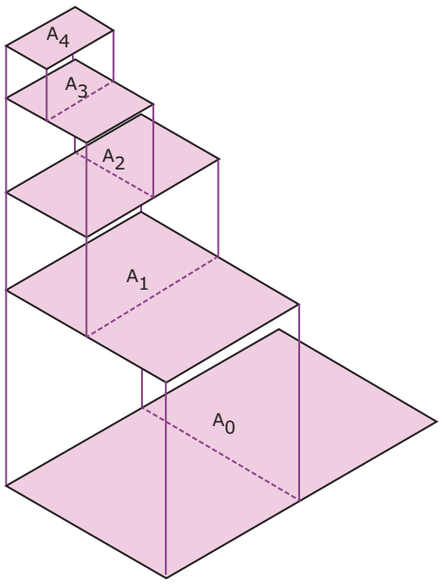

Figure 10 Drawing Sheet

2.3. BUREAU OF INDIAN STANDARDS

The field of engineering and Technology is fast evolving day by day to set newer trends in the world community. The arrival of foreign technologies, technical tie –ups between different countries, and exchange of new technologies have made it mandatory to set specific international standards in the field. This need is most felt in preparing and understanding of engineering drawing. Indian Standards Institute (ISI) established in the year 1947, formulated the code of practice for general engineering drawing in the year 1955. ISI was taken over and renamed as Bureau of Indian Standards (B.I.S.) in the year 1987 by an Act in the Indian Parliament.

2.3.1. Layout of drawing sheet

The Layout of drawing sheets make it easy for the readers to locate all important references of the drawing. For this a standard arrangement should be followed in which all the information are included. The Layout of drawing sheet should have the following features.

1. Margin
2. Title block
3. Parts list
4. Revision panel
5. Zone system
6. Folding marks

Margin: Margin is provided in a drawing sheet to enable it to be trimmed.

XI_BME_CHAP02_2022.indd 20 25-01-2023 13:14:24

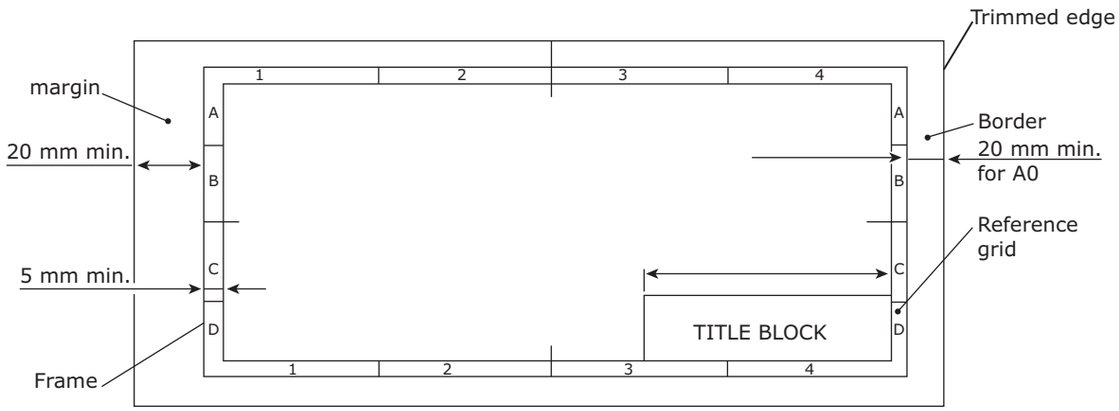

Figure 11 Layout of drawing sheet

Apart from margins, border lines are drawn to get a complete working space. Drawing of border lines should also facilitate easy filing or binding.

Title Block: Provision of title block in a drawing in necessary as it gives all information regarding the drawing. It is placed at the bottom right hard corner of the drawing sheet. B.I.S has recommended the size of the title block to be 185mm x 65mm. The size is the same for all designated sizes of the sheet (i.e. from A0-A5). The title block should contain the following information. A0-A5 a sample title block is given below:

Title of Drawing

1. Drawing Number
2. Title of the Drawing
3. Projection
4. Material Details
5. Scale of Drawing
6. Surface Finish
7. Tolerance

2.4. LETTERING AND DIMENSIONING

2.4.1. Lettering

Lettering is an important feature in engineering drawings. Writing of titles and subtitles of drawings, dimensioning the parts of the objects drawn, writing the scale and other details is called dimensioning.

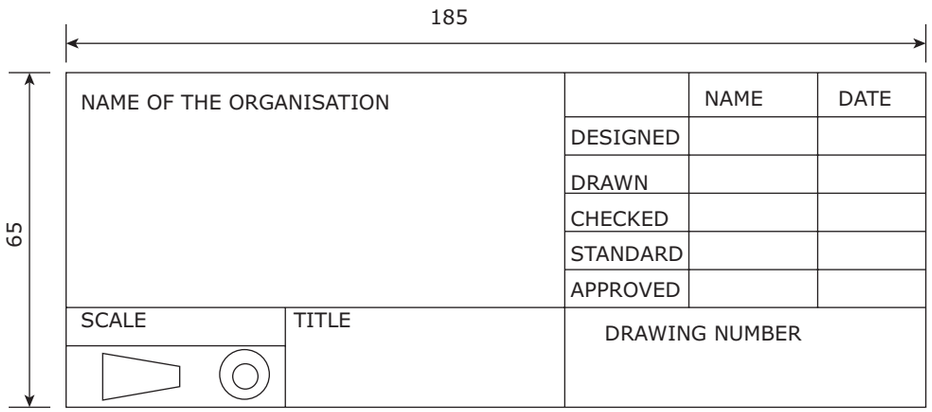

Figure 12 Title Block

XI_BME_CHAP02_2022.indd 21 25-01-2023 13:14:24

Importance of Lettering

Neatness, legibility, uniformity, suitability for microfilming and photocopying are the main feature of lettering. Poor lettering will spoil the appearance of a drawing and lead to wrong results. So, it very important that it is done correctly to finish the drawing completely.

Proportion of Lettering

There is no specified proportions for each letter of alphabets lettering. Considering uniformity, a proportions between the height and the width is to be followed. There are three proportions by which lettering can be done best. They are

1. NORMAL LETTERING
2. CONDENSED LETTERING
3. EXTENDED LETTERING

Normal lettering: It will have normal height and width and finds application in general use.

Condensed lettering: It has shortened width with respect to its height and is used where space available is limited.

Extended lettering: It will have more width and normal height.

Spacing of Letters

The distance left between two adjacent letters while lettering is known as spacing of letters.

A distance equal to the 3/5th of the height of the letters has to be left between two successive words. The space between two lines should be equal to 1 ½ times the height of the letters.

Size of Letters

The size of letters in engineering drawing is the height of the letters. B.I.S recommends standard sizes of lettering for various features and they are listed below

SI No	Features	Size (Height in mm)
1	Drawing Numbers, Letters indicating cutting plane section	10, 12
2	Title of the drawing	6, 8
3	Sub-titles and headings	3, 4, 5 & 6
4	Material List, Dimensioning, Schedules , notes	3, 4 & 5
5	Tolerances Alteration entries	2 & 3

Types of Letters

The lettering in which the alphabets are written with uniform thickness is known as Gothic lettering. Gothic lettering may be done on single stroke and double stroke. Double stroke letters are thicker than single stroke letters.

ITALIC PRINTING IS

free hand gothic

OR ROMAN LETTERING

XI_BME_CHAP02_2022.indd 22 25-01-2023 13:14:24

1. Vertical letters
   a) Upper case letters (capital)
   b) Lower case letters
2. Inclined letters
   a) Upper case letters (capital)
   b) Lower case letters

Vertical Letters: If the direction of alphabets and numerals is vertical, the letters are known as vertical letters, both upper case and lower case letters are written in this fashion.

Inclined Letters: When the letters are written inclined to the horizontal line, they are called inclined letters. The angle of inclination is approximately 75° from right to left.

Vertical Upper Case Letters

A B C D E F G H I J K L M N

O P Q R S T U V W X Y Z

I II III IV V VIVII VIII XI X

Vertical Lower case Letters

a b c d e f g h i j k l m n

o p q r s t u v w x y z

1 2 3 4 5 6 7 8 9 0

Inclined Upper case letters

A B C D E F G H I J K L M N

O P Q R S T U V W X Y Z

I II III IV V VIVII VIII XI X

Inclined lower case letters

a b c d e f g h i j k l m n

o p q r s t u v w x y z

1 2 3 4 5 6 7 8 9 0

2.4.2. Dimensioning

Drawings are made to represent the actual shape and size of the objects to be produced. So it is necessary to place proper dimensions and related information regarding different parts of the object. In case the dimensioning is not done properly, there will be great loss in materials, labour and time.

Dimensioning is known as the method of writing various sizes (or) measurements of an object and other important information such as tolerances on a finished drawing. It should be done with great care that no information is left out in describing the object completely.

XI_BME_CHAP02_2022.indd 23 25-01-2023 13:14:24

Types of Dimensions

System of Dimensions

According to B.I.S., there are two system of placing dimensions on drawing and they are

1. Aligned system
2. Unidirectional system

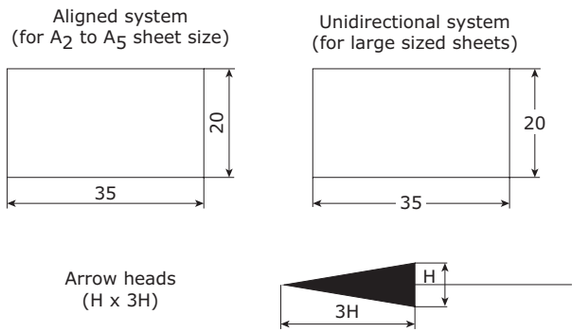

Figure 13 Types of Dimensions

Aligned system: The dimensions are placed in a manner to read them from the bottom or from the right side of the drawing. All the dimensions are placed above the dimension lines. Aligned system dimensioning is commonly used in engineering drawing.

Unidirectional system: The dimensions are placed so that they may be read from the bottom of the drawing only. The dimensions are placed approximately at the middle of the dimension line by breaking it .There is no restriction in controlling the direction of the dimension lines.

Notation of dimensioning

The dimension lines, extension lines, leader lines, arrow head, dimension figures, notes and symbols make up the notation of dimensioning.

Dimension line: Dimension lines are used to indicate the measurement in numbers at a space above them or at a space created by breaking them approximately at their center. Dimension line is drawn as thin continuous line.

Extension line: It is the line that extends from the outline of the object on a drawing. It is a continuous thin line extending atleast about 2mm beyond the dimension line.

Leader line: When some notes are to be made regarding a specific feature of a drawing, leader lines are used. They extended from where the notes have to be applied to a point where the notes are actually written. Leader line has an arrow at one end which touches the particular feature. It is drawn at any convenient angle between 30° to 60°.

Arrow Head: Arrow head are placed at both ends of a dimension line. They touch the extension lines drawn from the outline of the part and indicates the extend of a dimension. The length and width of the arrow should be in the ratio 3:1.

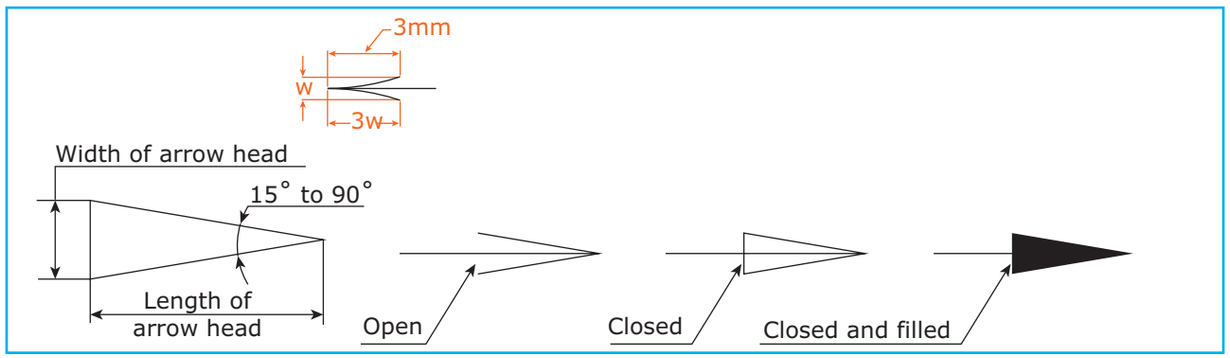

Figure 14 Arrow Head

XI_BME_CHAP02_2022.indd 24 25-01-2023 13:14:25

Drawing Figure: The size of a specific feature is indicated by the dimension figure either as a numerical or as symbols like Ø, R followed by numerals.

Types of Line

Engineering drawing is made by the combination of different types of lines. Each line shown in the drawing is meant to represent a separate meaning. So it necessary to understand the types of lines and their meaning to make or read a drawing successfully.

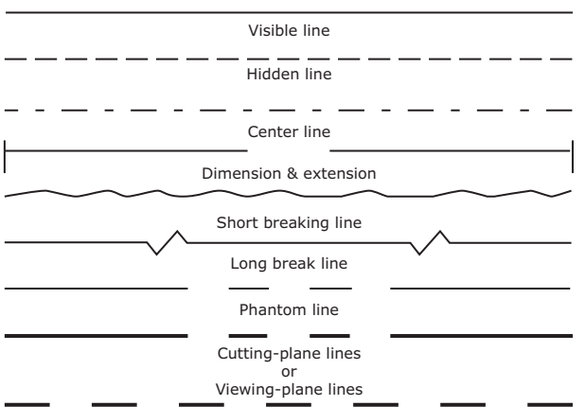

Figure 15 Types of Line

Continuous thick line: A continuous thick line in a drawing represents a visible edge or outline. It is drawn with a H or HB grade pencil.

Continuous thin line: Continuous thin lines are used for construction of a drawing. These lines are also used for drawing dimension lines, extension lines, leader lines, and sectional lines (hatching line). When used as construction lines, they do not appear on the finished drawing. But in geometrical drawings, they are removed. Continuous thin lines are drawn with 2H pencils.

Short dashes: Short dashes represent hidden features or outlines in a drawing. The dashes should be of uniform length and the spacing equal. They are drawn with H pencils.

Long chain (thin): Long chain lines are drawn as an alternative combination of a long dash and a short dash. The lengths of both long dashes, short dashes are to be maintained uniform and they are equispaced. They represent centre lines, extreme positions movable parts and pitch circles in drawings. This types of line is drawn with a 2H pencil.

Long chain (Thick at ends): It is very similar to a long chain line expect that the terminal long dashes are drawn thick. Cutting plane lines are represented by this type of line. The terminal dashes are drawn with H pencil and others with 2H pencils.

Long chain (Thick): A long chain line is drawn thick completely for this type of line. The surfaces which are to receive additional treatment are represented by a long chain (thick) line. It is drawn with a HB pencil.

Continuous thin (Wavy): Irregular boundary lines and short break lines are drawn as wavy continuous thin lines. They are with 2H pencils.

Ruled line and short zigzag (thin): These lines indicate long break lines. When a long structure of uniform shape is to be shown on a drawing, its view is intercepted by this line and it is drawn with 2H pencil.

Continuous thick line

Continuous thin line

XI_BME_CHAP02_2022.indd 25 25-01-2023 13:14:25

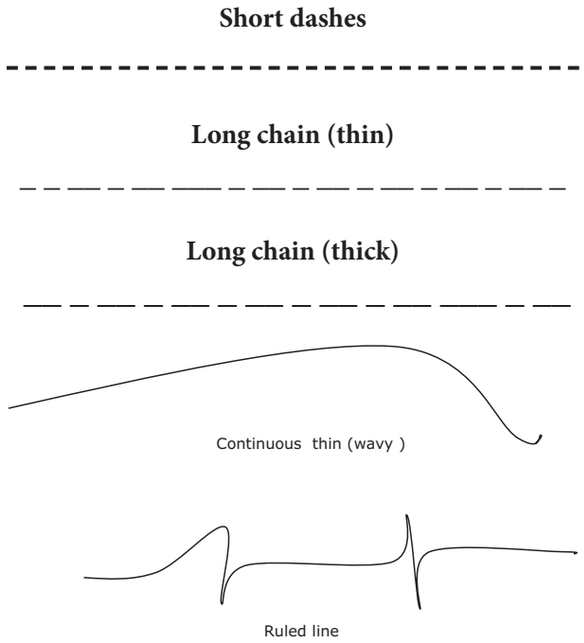

Figure 16 Types of Line

General rules for dimensioning

1. Dimension should be placed outside the view as far as possible.
2. Dimension lines should not intersect each other.
3. Dimension lines should not be placed cutting an extension line.
4. Dimension lines should be given on the view which shows the relevant feature most clearly.
5. Dimension should never be crowded. If the spaces is not sufficient, arrow heads may be replaced by dots or inclined lines.
6. The distance between the outline of the object and first dimension line should be at least 10mm.
7. A distance of atleast 8mm should be kept between two adjacent dimension lines.
8. The extension line should not project beyond 2mm from the dimension line.
9. Leader lines should be constructed at an angle to the horizontal(30°, 45° and 60°)
10. Center lines should not be used as dimension line.
11. Dimensions with smaller sizes should be placed near the drawing than those with bigger sizes.
12. Dimensions marked in one view, need not be repeated in other views.
13. While dimensioning angles, their values are placed outside the view.
14. Remarks, instructions and foot notes should be written horizontally.
15. Dimensions of part which are not drawn to scale should be underlined. If the whole drawing is not drawn to scale, a note should be made in the drawings as 'NOT TO SCALE'.
16. When all the dimensions are in same unit, there is no need to mention the unit. Instead a foot note should be written as 'ALL DIMENSIONS ARE IN mm'.
17. The size of the datum plane should be written within brackets.
18. While dimensioning external threads, the type, size and length should be marked.
19. The size of the arcs should be indicated by its radius.
20. The diameter of the circle is always specified as follows;

XI_BME_CHAP02_2022.indd 26 25-01-2023 13:14:25

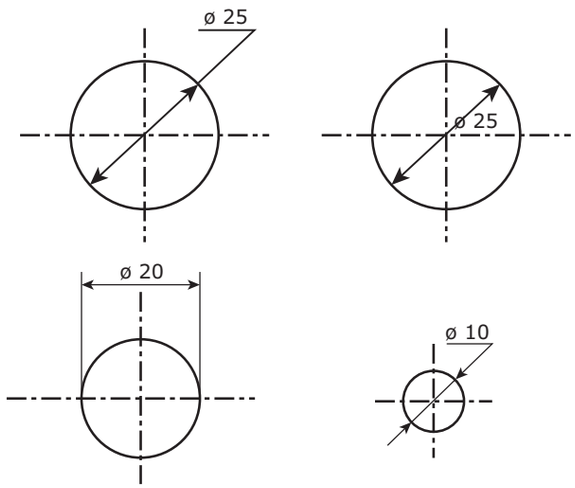

21. While marking the dimension of an arc, the dimension should be proceeded by a mark 'R'.

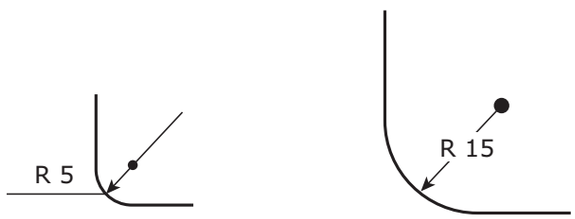

22. The dimensions of holes may be made in the following methods

It should be understood that the four holes are of 8mm diameter. The hole at the centre is 20 mm deep and the diameter is 20 mm.

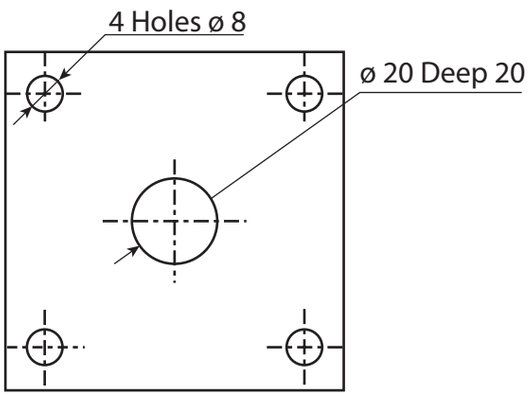

23. The hole on the left is 50 mm deep and is of diameter 12 mm. The other hole is a through hole of diameter 20 mm

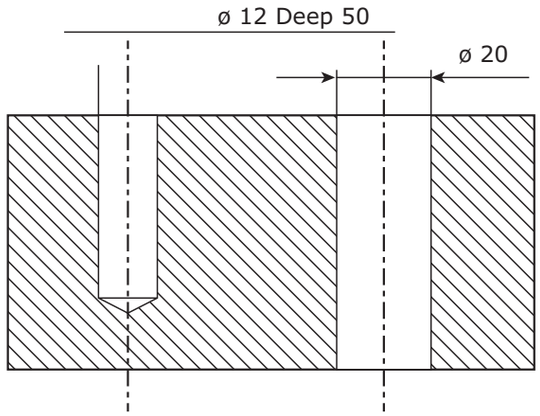

24. Chamfering is done at the ends of cylindrical parts and parts having cylindrical holes chamfering is dimensioned as shown following diagrams.

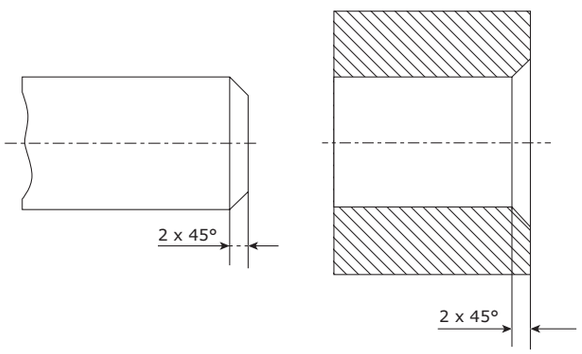

Incorrect and Correct Methods of Dimensioning

In the previous section, guidelines are given regarding proper dimensioning of some important profiles. However, there are chances that dimensions may not be represented in a correct way. Some examples are given in the next few pages to highlight the situations where dimensions are misrepresented frequently and to correct them.

XI_BME_CHAP02_2022.indd 27 25-01-2023 13:14:25

Incorrect

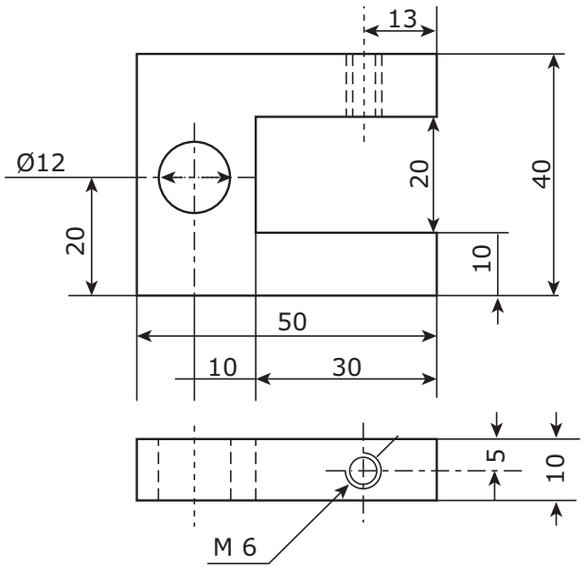

Correct

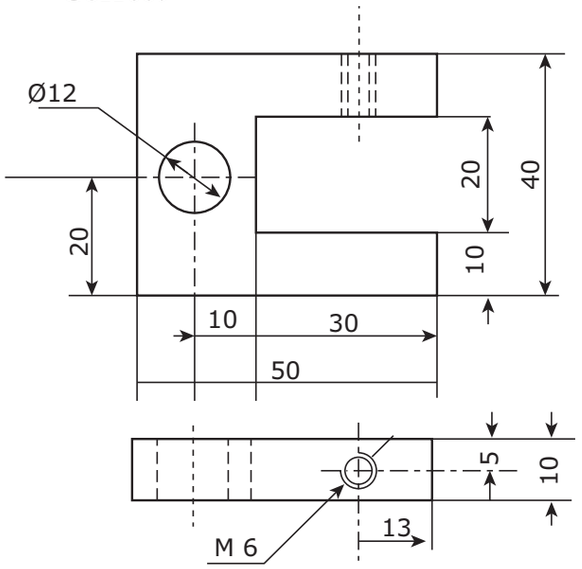

Incorrect

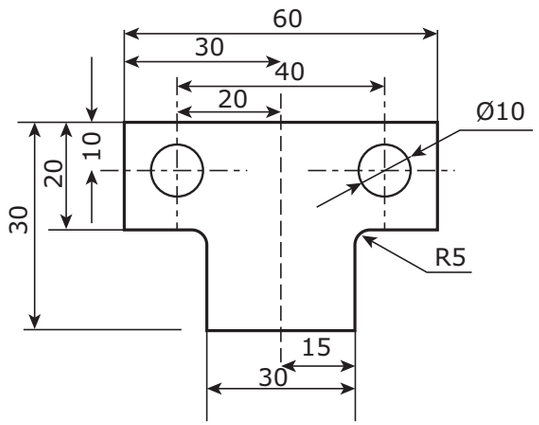

Correct

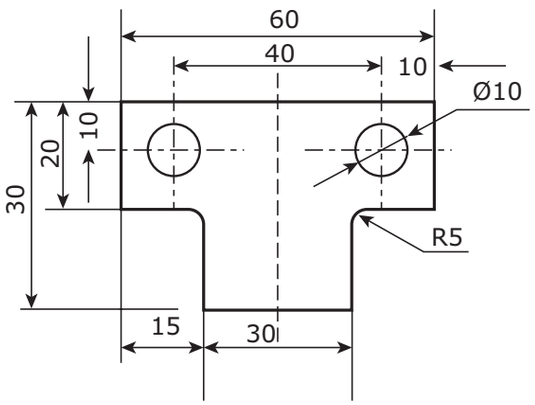

2.5. SCALE OF DRAWING

A proportion is used either to reduce or increases the dimensions of the object. So the proportion by which the actual size of the object is reduced or increased on a drawing is known as Scale of a drawing.

2.5.1. Uses of Scales

The important uses of scales are

1. Scales are useful in making reduced size and enlarged size drawings.
2. The dimensions of various parts can be measured directly.

2..5.2. Types of scales

There are three types of scales according to the proportions made on them.

1. Full size scale
2. Reducing scale
3. Enlarging scale

Full size scale: When the dimensions of objects are shown on a drawings in its actual sizes, the scale used in the drawings is full size scale. Full size scale is indicated as 1:1

XI_BME_CHAP02_2022.indd 28 25-01-2023 13:14:26

Reducing scale: When the size of the object is too large to be accommodated on a drawing sheet, the dimensions of the object are reduced in a particular proportion and represented in the drawing. This scale is known as reducing scale.

Eg: 1:2, 1:5, & 1:10

Enlarging scale: When the size of the object to be shown on the drawing sheet is very small to give clear description about the object, the dimensions of the object are enlarged in a particular proportion. This scale is called enlarging scale.

Eg: 2:1, 5:1, and 10:1.

Full size scale	Reducing scale	Enlarging scale
1:1	1:2 1:5 1:10 1:20 1:50 1:100 1:200	10:1 5:1 2:1

2.6. PROJECTION

In the engineering drawing, the exact shape and size of an object should be shown on a two dimensional plane and paper. For doing so, the object is imagined to be located between the observer and the plane on which the view is going to be obtained. Straight lines are drawn from different points on the contour of the object to meet the plane of paper. The points obtained on the sheet of paper are joined in proper sequence to form the image or view of the object.

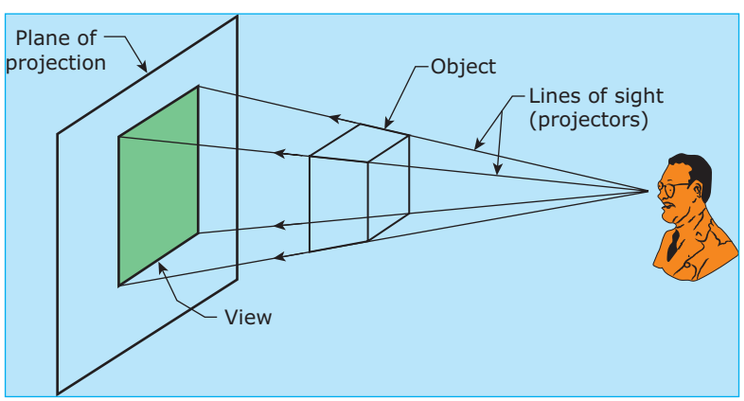

2.6.1. Isometric View

If the length, breadth and height of an object are drawn and shown in a single view which is called Isometric view.

Method of drawing of Isometric View

Isometric projection is the representation of an object in pictorial form. In isometric projection, there are three pictorial axes namely X, Y and Z which are 120° apart. The length, breadth and height of the object are drawn on these axes.

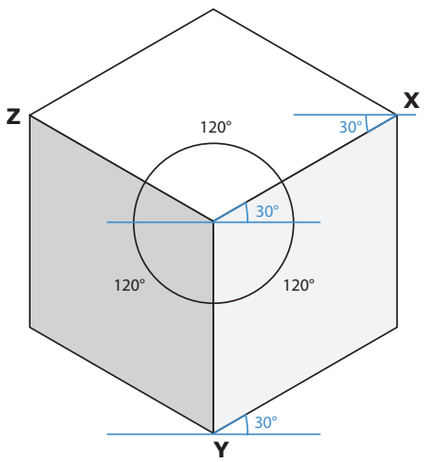

2.6.2. Orthographic Projection

It is the projection in which different views of an object are obtained on planes of projection when the projectors are parallel to each other and perpendicular to the plane on which the view is projected.

XI_BME_CHAP02_2022.indd 29 25-01-2023 13:14:26

There are some assumptions to be made for obtaining orthographic projection:

1. The observer looks at the object from an infinite distance.
2. The lines drawn from various points on the contour of the object (projectors) are parallel to each other.
3. On projection from the object, these lines meet the plane (of projection) at right angles (the Projectors are perpendicular to the plane of projection)
4. The plane of projection is transparent.

Types of orthographic projection

The object can be placed in any of the four quadrants to obtain the projections (or) views. In convention. The practice of getting views by placing the object either in the first or in the third quadrant is followed. So, the types of orthographic projections are

1. First angle projection
2. Third angle projection

First Angle Projection: When the object is placed in the first quadrant in front of the vertical plane and above the horizontal plane, the method of obtaining the projections on these planes is called First Angle Projection.

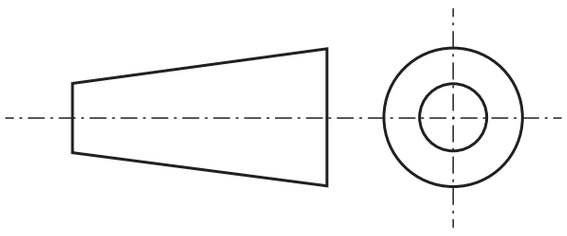

In this method of projection, the object lies between the observer and the planes of projection. The front view is obtained above the ground line (or) reference line and the top view is obtained below the ground line. When the horizontal plane and auxiliary vertical plane are rotated after obtaining the projections, the views will be arranged as follows:

1. The top view is placed below the front view
2. The left side view is placed at the right side of the front view
3. The right side view is positional at the left side of the front view.

Third Angle Projection: The method of obtaining projections on vertical plane and above the horizontal planes by placing the object in the third quadrant is known as Third Angle Projection. Here, the object is placed behind the vertical plane and below the horizontal plane.

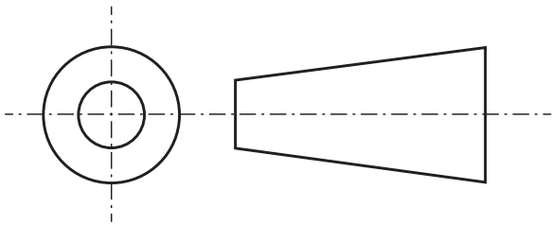

In this method of projection, the planes of projection lie between the observer and the object. The front view is obtained below the ground line and the top view is obtained above the ground line.

When the horizontal plane and auxiliary vertical plane are rotated after obtaining the projections, the views will be arranged as follows:

1. The top view is placed above the front view
2. The left side view is placed at the left side of the front view
3. The right side view is placed at the right side of the front view.

XI_BME_CHAP02_2022.indd 30 25-01-2023 13:14:26

Views obtained in orthographic projection

Different views are obtained on different planes in orthographic projection. They are

1. Front View (or) Elevation
2. Top view (or) Plan
3. Right Side View
4. Left side View
5. View from Below
6. View from the Rear
7. Cut Section View
8. Auxiliary view

Front view: when the object is viewed from its front, the projection (or) view of the object obtained on the vertical plane, is known as front view. It is also known as Elevation. The details of length and height are found in this view.

Top view: when the object is viewed from its top, the projection (or) view of the object obtained on the horizontal plane, is known as top view. It is also known as Plan. Length and width details of the object are found in this view.

Side view: When the object is viewed from its side, the projection (or) view of the object obtained on the auxiliary vertical plane is known as side view.

Auxiliary view: when the object is viewed from a direction which is not parallel to any of the three major axes, the projection (or) view obtained on a auxiliary plane is known as auxiliary view. When a specific detail which cannot be shown in any of the above three views is necessary to be shown, it is done so on auxiliary view.

Making orthographic projection from isometric view

The isometric view helps us in understanding the shape of the object but does not give the dimensional and inner details of the object. But these details are necessary for designing and manufacturing purposes. So, the need of orthographic projection becomes essential.

The object is viewed from the direction of arrow to obtain the front view. If the arrow is not given, the most prominent views is taken as front view. The other views are obtained by viewing the object in direction that are perpendicular to the one utilized for front view.

Isometric views **Orthographic Projections**

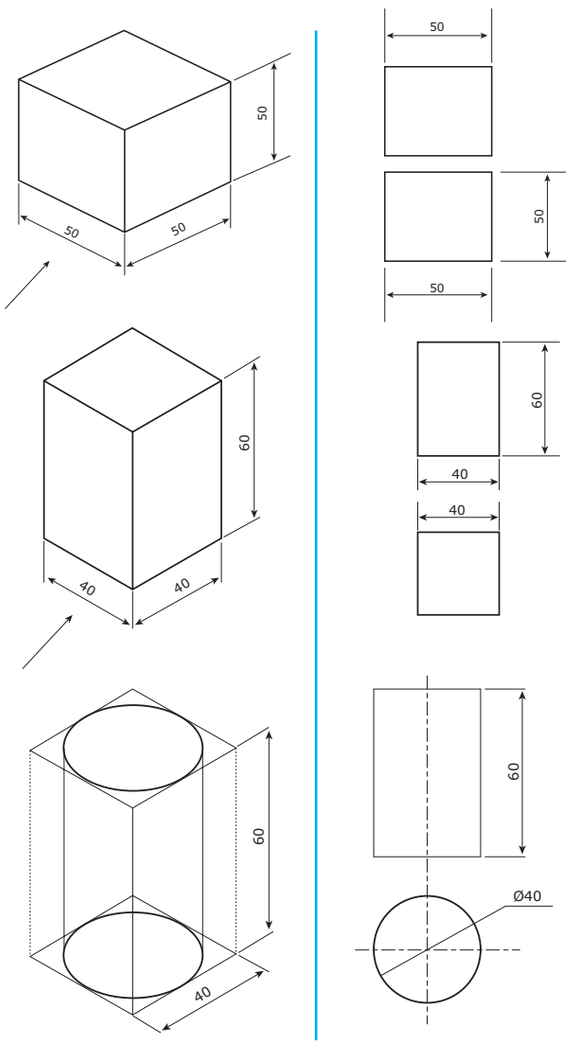

XI_BME_CHAP02_2022.indd 31 25-01-2023 13:14:26

The following illustrations are given to make orthographic projections from the given isometric views.

Method of Drawing Orthographic View

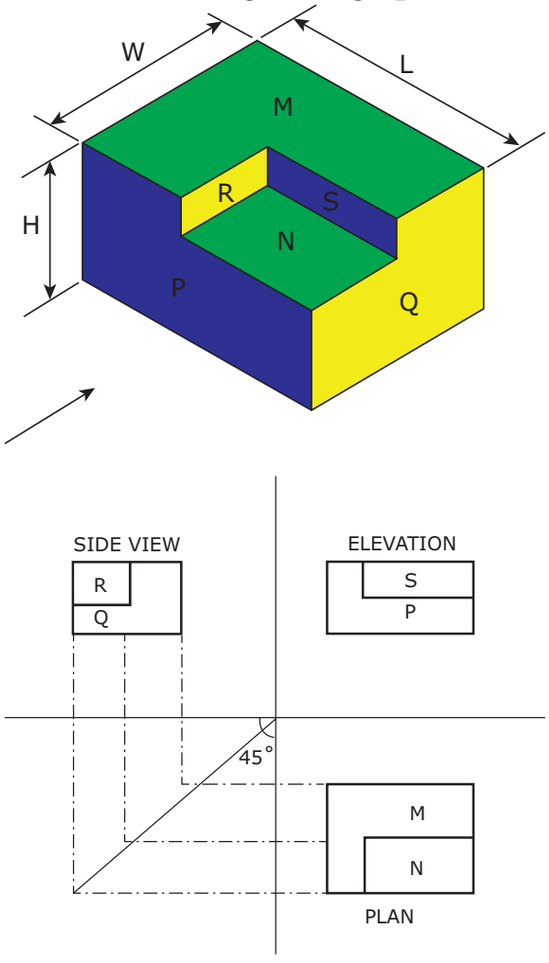

2.6.3. Sectional View

A sectional view is a view used on a drawing to show an area or a hidden part of an object by cutting away or removing some of that object.

An imaginary cutting surface to draw a cross sectional view of an object is called cutting plane.

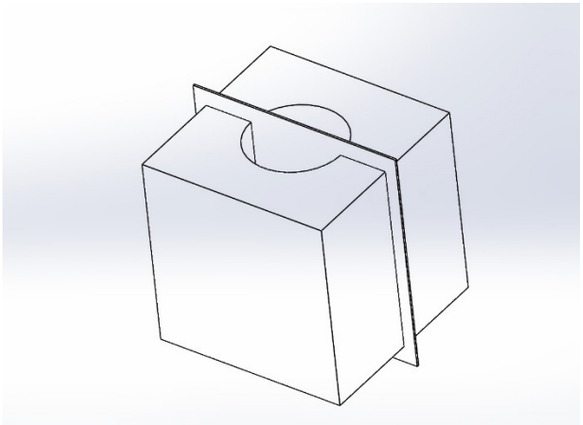

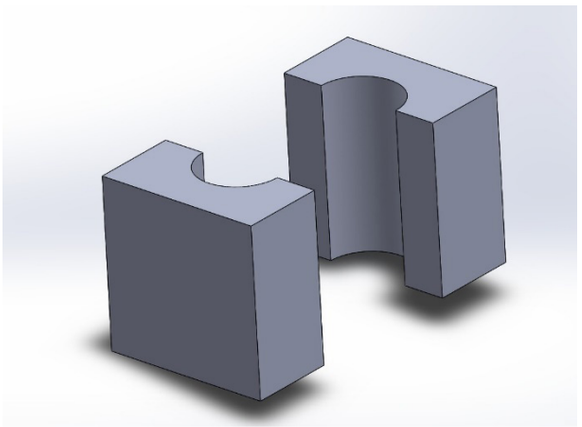

Types of Sectional view

The following are the types of sectional views used in engineering drawing.

1. Full sectional view
2. Half sectional view
3. Offset sectional view
4. Broken sectional view
5. Revolving sectional view
6. Removed sectional view

XI_BME_CHAP02_2022.indd 32 25-01-2023 13:14:27

2.7. BLUE PRINT READING

SI.No.	Description	Symbol	Specified Dimensions
01.	Round section		**d**
02.	Tube	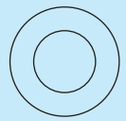	**d x t**
03.	Square section	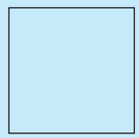	**s**
04.	Triangular section	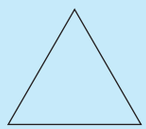	**a**
05.	Hexagonal section	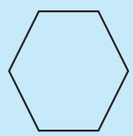	**s**
06.	Half round section		
07.	Rectangular section	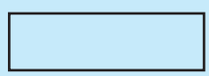	**w x t**
08.	Angle section	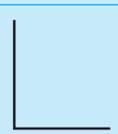 	**A x B** **A x B**
09.	T section	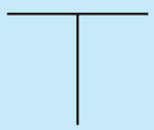	**h x b** **h x b**
10.	I – beam section	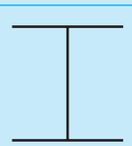	**h**

XI_BME_CHAP02_2022.indd 33 25-01-2023 13:14:27

SI.No.	Description	Symbol	Specified Dimensions
11.	Channel section		**h**
12.	Z section		
13.	Rail section	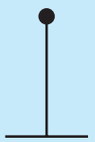	
14.	Bulb Angle section		**h**
15.	Bulb plate section		**h**

Title	Actual Projection/Section	Convention
External Threads	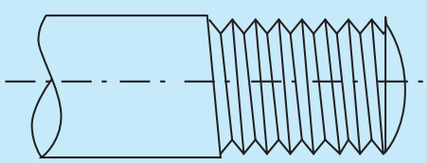	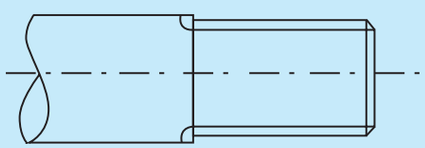
Internal Threads	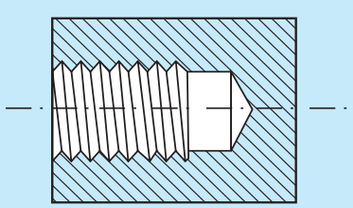	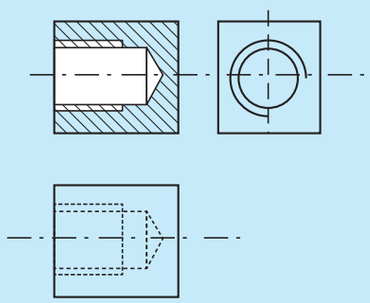

XI_BME_CHAP02_2022.indd 34 25-01-2023 13:14:28

Title	Actual Projection/Section	Convention
Slotted Head	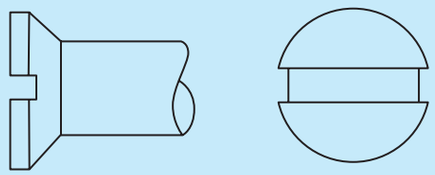	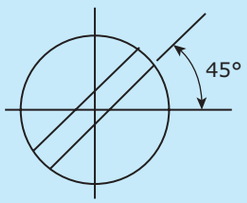
Square End and Flat	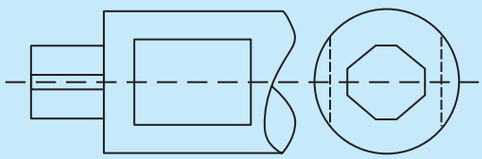	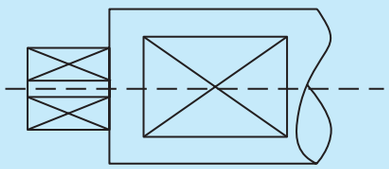
Redial Ribs	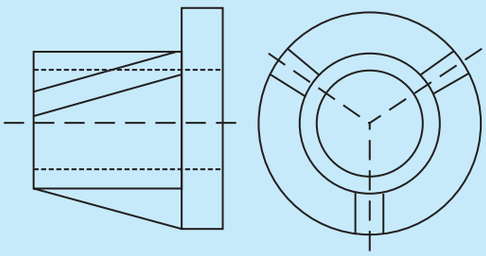	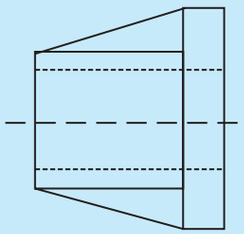
Bearing	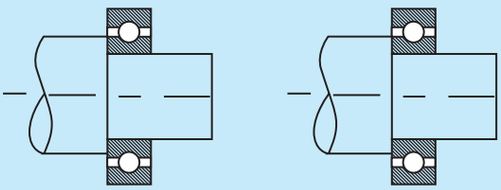	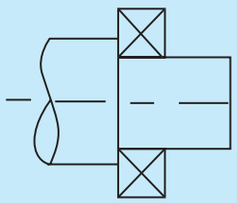
Knurling	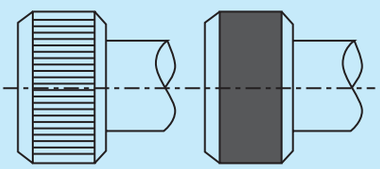	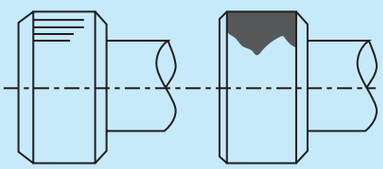
Holes on Linear Pitch	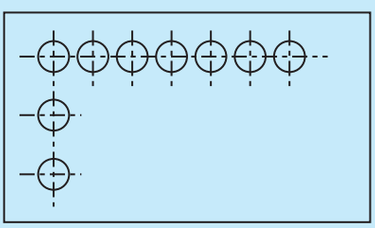	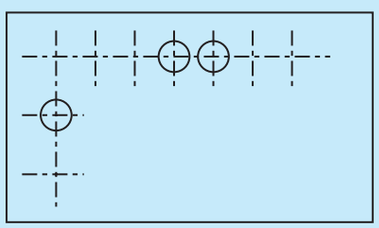
Holes on Circular Pitch	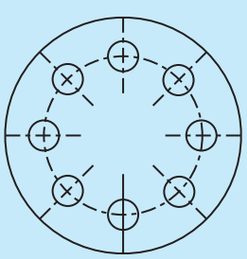	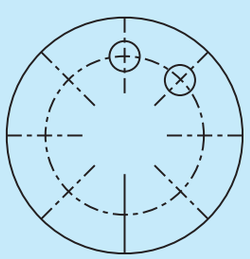

XI_BME_CHAP02_2022.indd 35 25-01-2023 13:14:29

Details in Drawing

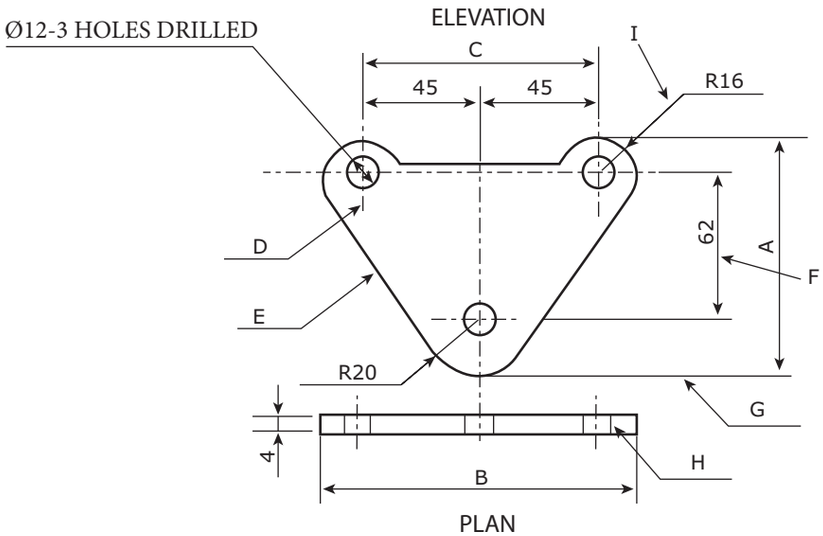

1. The two views drawn in this drawing are Plan and Elevation
2. The lines used in the drawing are
   a. D- Center Line
   b. E- Visible Outline
   c. F- Dimension Line
   d. G- Extension Line
   e. H- Dotted Line
   f. I - Leader Line
3. The value of B is 122mm

   Where,
   i. In elevation view two radius are given as R5 and R16, which means it is 5mm & 16mm.
   ii. The distance between the centre of the holes are 45, 45
   iii. So B= 16+16+45+45= 122mm
4. There are three holes in the part

   Where,

   3 Holes with the Diameter of 12mm- mentioned as

   D12 Drilled Hole 3 Nos
5. Thickness of the plate is 4mm mentioned in plan view of the drawing

XI_BME_CHAP02_2022.indd 36 25-01-2023 13:14:29

Activities

1. Collect different grade of pencils.
2. Collect different size of paper.

QUESTIONS

I Choose the best answer

1. The method of drawing length, breadth, and height of an object on planes 120° a part is known as
   a. Orthographic projection
   b. Isometric projection
   c. First angle projection
   d. Third angle projection

2. Curve lines and circular arcs which cannot be drawn with a compass can quickly be drawn with
   a. French Curves
   b. Divider
   c. Set Square
   d. Protractor

3. Top view is obtained on
   a. Vertical plane
   b. Horizontal plane
   c. Profile plane
   d. Auxiliary plane

4. In first angle projection the top view is placed
   a. Above the front view
   b. Left side of the front view
   c. Right side of the front view
   d. Below the front view

5. BIS refers to
   a. Bharath industrial society
   b. Bureau of Indian standards
   c. British institute of standards
   d. Bureau of international standards

6. ISI was taken over and renamed as BIS in the year
   a. 1947 b. 1983
   c. 1987 d. 1999

7. The size of letters in the title of the drawing is
   a. 10mm b. 6mm
   c. 3mm d. 2mm

8. Gothic lettering
   a. Is done by writing alphabets with uniform thickness
   b. Is done with calligraphic nibs
   c. Has shortened width with respect to its height
   d. Has more width and normal height

9. The method of placing dimensions parallel and about the dimension lines is
   a. Aligned system
   b. Leader line method
   c. Extension line method
   d. Unidirectional system

XI_BME_CHAP02_2022.indd 37 25-01-2023 13:14:29

10. The length and width of the arrowhead should be in the ratio

a. 2:1 b. 1:2
c. 3:1 d. 5:2

11. Drawing boards with dimensions of 1000 X 700 X 25 is designated as

a. D0 b. D1
c. D2 d. D3

12. Drawing sheets with dimensions of 297 X 210 is designated as

a. A0 b. A1
c. A2 d. A4

13. Horizontal and parallel lines are drawn with

a. T-square
b. Protractor
c. French curves
d. Drawing board

14. Freehand sketches are made with

a. 2B Pencils
b. 4B pencils
c. HB pencils
d. 2H pencils

15. Angular lines are drawn and measured with

a. Divider
b. Protractor
c. Compasses
d. Tee square

16. Straight and curved lines may be divided equally with

a. Divider
b. Protractor
c. Compasses
d. Inking pen

17. Length and Height are found in

a. Front View
b. Right side View
c. Left side View
d. Top View

18. The extension line should not project beyond _____ from the dimension line.

a. 3 mm b. 2 mm
c. 1mm d. 4 mm

19. The distance between the outline of the object and first dimension line should be atleast _____

a. 10 mm b. 6 mm
c. 4 mm d. 3 mm

20. The angle of inclined letters

a. 45° b. 35°
c. 75° d. 60°

21. The reducing scale is indicated as

a. 1:1
b. 1:2
c. 2 :1
d. None of the above

II. ANSWER THE FOLLOWING QUESTIONS (3 MARK)

22. What are the types of orthographic projection?
23. What is isometric projection?
24. What is orthographic projection?
25. What is third angle projection?

XI_BME_CHAP02_2022.indd 38 25-01-2023 13:14:29

26. What are the views obtained in orthographic projection?
27. Draw the symbol of first angle projection and third angle projection?
28. When was BIS established?
29. What does ISI refer to?
30. What is a title block?
31. What are the main features of lettering?
32. What are the types of letters?
33. What is dimensioning?
34. What are the two types of dimensioning and explain?
35. Mention the two types of set-square?
36. What are the grades of drawing pencils?
37. What is the use of French curves?
38. What are the instruments found in the instrument box?
39. What are the objectives of a sectional view?
40. What is cutting plane?
41. What is a sectional view?
42. What are the types of sectional views?
43. What is a scale of a drawing?
44. What are the important uses of scales?
45. What are the types of scales?

III. ANSWER THE FOLLOWING QUESTIONS (5 MARK)

46. What are the informations to be furnished in a title block
47. Draw different types of lines and specify their applications.

IV. ANSWER THE FOLLOWING QUESTIONS (10 MARK)

48. Answer the following questions by using the diagram

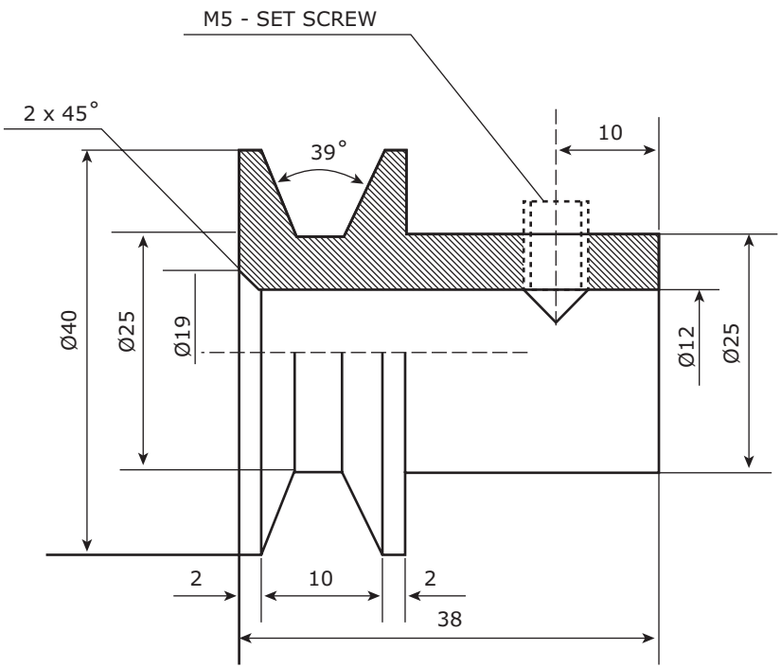

XI_BME_CHAP02_2022.indd 39 25-01-2023 13:14:30

a. Mention the use of the part
b. What is the outer diameter of the part?
c. What is the length of the part?
d. What is the size of the thread?
e. What is the angle of the V – groove?
f. What is the diameter of the central hole?
g. What is the depth of the V – groove?

49. Answer the following questions by using the diagram

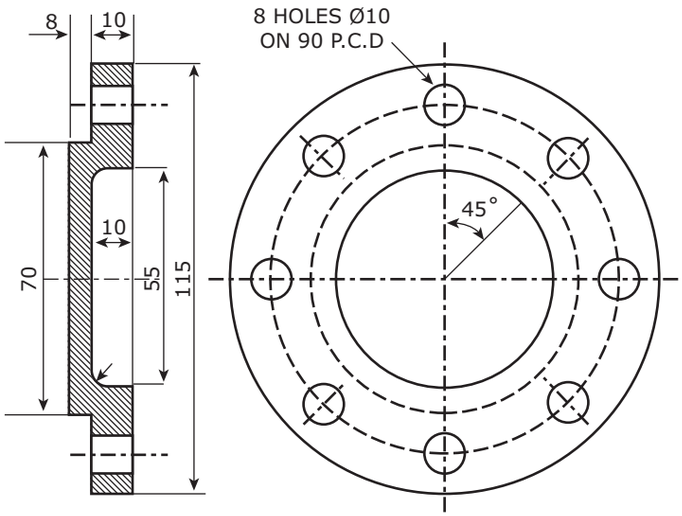

a. What is the pitch circle diameter?
b. How many holes are there in the part?
c. What is the outer diameter of the part?
d. What is the thickness of the part?
e. What is the angle between two adjacent holes?

50. Answer the following questions by using the diagram

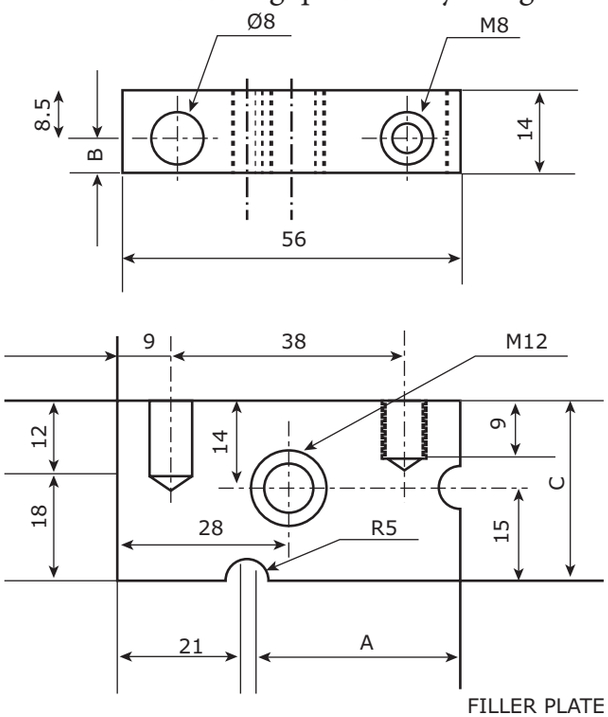

a. How many holes are tapped?
b. What is the radius of the groove?
c. What is the length of the part?
d. What is the width of the part?
e. What is the height of the part?
f. What are the dimensions represented by A, B & C?

XI_BME_CHAP02_2022.indd 40 25-01-2023 13:14:30

51. Answer the following questions by using the diagram

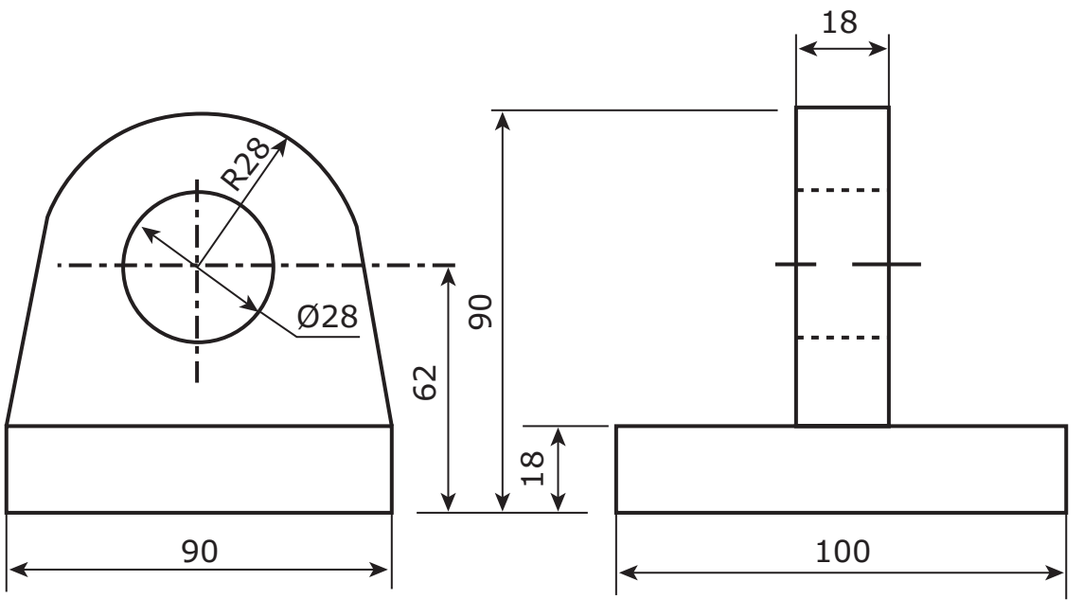

a. What are the overall dimensions(Lenth, Width, Height) of the bracket shown?

b. What is the shape and overall size (Lenth, Width, Thickness) of the base of the bracket?

c. What is the size of the diameter of the hole in the bracket?

d. What is the radius of the curved top?

e. What is the thickness of the bracket?

XI_BME_CHAP02_2022.indd 41 25-01-2023 13:14:30

CHAPTER

3

AUTOCAD

LEARNING OBJECTIVES

1. To get introduced to AutoCAD software
2. To know different menus, tools, commands and its uses
3. Able to make basic 2D drawing and mechanical engineering drawing using AutoCAD software
4. Able to modify 2D Mechanical Drawing
5. Able to read the mechanical engineering drawing and to obtain the technical information

TABLE OF CONTENT

3.1. Introduction
3.2. Understanding the AutoCAD software
3.3. Important Functions
3.4. Important commands
3.5. Shortcut Keys in AutoCAD
3.6. Setup Commands
3.7. Absolute and Incremental coordinate references
3.8. Using the AutoCAD Commands
3.9. Layers in AutoCAD
3.10. Dimensioning in AutoCAD
3.11. Exporting DWG file to PDF

3.1 INTRODUCTION

- AutoCAD was released in 1982 by Autodesk, Inc., which was a small company at that time. It was designed to be used for PCs only. Since then AutoCAD has enjoyed the biggest user base in the world in the CAD business. Users can use AutoCAD for both 2D and 3D drafting and designing. AutoCAD can be used for architectural, structural, mechanical, electrical, environmental, and manufacturing drawings and for road and highway designs. Though the focus these days is BIM (Building Information Modelling), AutoCAD is still the most profitable software for Autodesk, Inc. due to its ease of use and comprehensiveness, which address all user needs. Another version of AutoCAD, called AutoCAD LT, is used for 2D drafting only.

XI_BME_CHAP03_2022.indd 42 5/3/2022 10:37:21 AM

To start AutoCAD 2016, double-click the shortcut on your desktop that was created in the installation process. AutoCAD will show the Welcome window, which looks like the following screen:

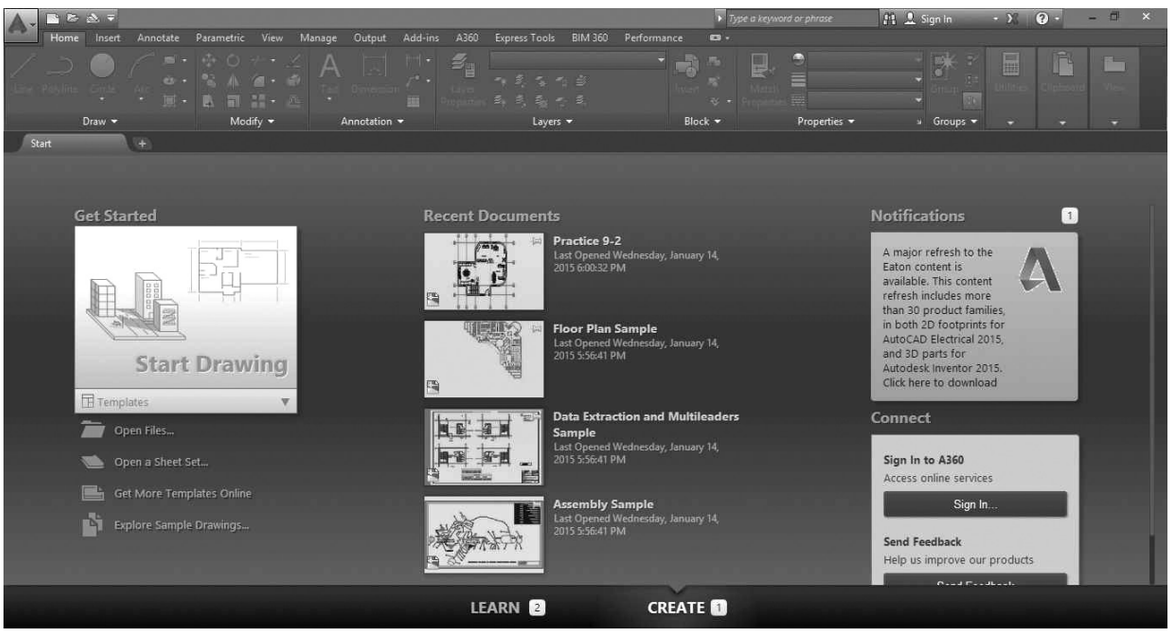

Figure 1 Start Screen

As you can see at the bottom, there are two choices: CREATE and LEARN. In the current figure you are seeing the CREATE part. While you are in this part you can:

- Start a new drawing.
- Open an existing file.
- Open a Sheet Set.
- Download more templates from online.
- Explore the sample files that come with the software
- See the recent files you opened
- Check if AutoCAD has a notification for you concerning your software/hardware
- Connect to Autodesk 360 (Autodesk Cloud)
- Send your feedback to Autodesk

At the bottom, click the LEARN option to see the following screen:

XI_BME_CHAP03_2022.indd 43 5/3/2022 10:37:21 AM

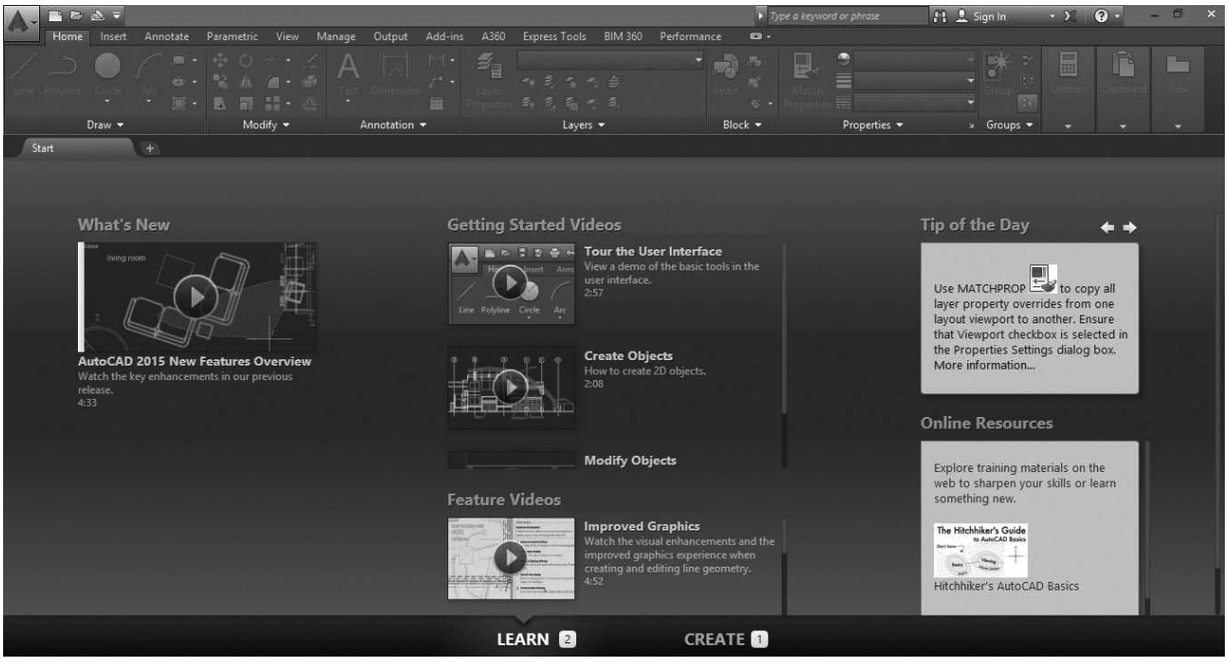

Figure 2 Learn Screen

You will see in this part the following:

- Videos of the new features of AutoCAD 2016
- Other videos discussing features of AutoCAD 2016, like how to use some modifying commands in AutoCAD
- Tips from Autodesk (normally you will see different tips every time you start AutoCAD)
- Some online sources to help and train you like Hitchhiker videos and Lynda.com

XI_BME_CHAP03_2022.indd 44 5/3/2022 10:37:21 AM

3.2. UNDERSTANDING THE AUTOCAD SOFTWARE

Starting a new file or opening an existing file will show you the interface of AutoCAD 2016, which will look like the following:

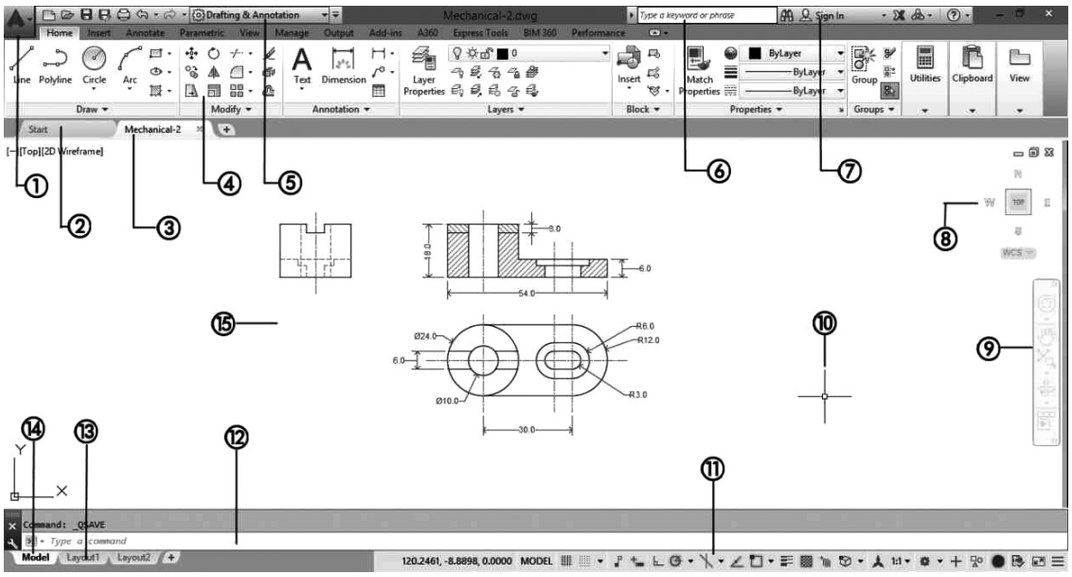

Figure 3 Work Screen

1. **Application Menu:** It contains the file related commands: New, open, save, save as, export, publish, print, suite workflows, drawing utilities, close
2. **Start Tab:** Where Create and Learn option will be there
3. **File Tab:** After creating with specified filename, this tab can be accessed
4. **Ribbon:** Where draw (line, polyline, circle, etc.), Modify (Move, Rotate, Trim, etc.), Annotation (Used to write texts), layers, blocks, etc. will be there.
5. **Workspace:** The Workspace is the set of tabs (hence panels) which will appear together along with the palettes, menus, toolbars, and Quick Access toolbars. To create a new workspace, start CUI command, at the upper left part locate Workspaces, right-click, and select the New Workspace option.
6. **Info Center:** Used to get information about the unknown data
7. **Autodesk 360:** User can be signed in
8. **View Cube:** Used to known the direction of drawing
9. **Navigation Bar:** Used to scroll down and up
10. **Cross Hairs:** Shows the location of cursor
11. **Status Bar:** The status bar in AutoCAD contains coordinates along with important functions; some of them are for precise drafting in 2D, and some of them are for 3D.
12. **Command Window:** Where commands are to be typed (Ex. M (short form) for MOVE (full form) – One can type either M or MOVE to use this command)
13. **Layout Tab:** Layout is where you will plot your drawing. Each layout will be linked to a Page Setup, Objects (like a title block), text, dimensions, and finally Viewports
14. **Model Tab:** Shows current window where modelling is done
15. **Graphical Area:** The graphical area is your drafting area. This is where you will draw all your lines, arcs, and circles. It is a precise environment with an XYZ space for 3D and an XY plane for 2D. You can monitor coordinates in the left part of the status bar.

XI_BME_CHAP03_2022.indd 45 5/3/2022 10:37:21 AM

3.3. IMPORTANT FUNCTIONS

Ortho Function

Ortho function will force the lines to be at right angles (orthogonal) using the following angles: 0, 90, 180, and 270. In order to turn on/off the Ortho, press F8 button.

Object Snap

Object Snap, or OSNAP, is the most important accuracy tool to be used in AutoCAD for 2D and 3D as well. It is a way to specify points on objects precisely using the AutoCAD database stored in the drawing file. To activate running OSNAPs in the drawing, press F3.

Some of the important Object Snaps are given below:

Endpoint: To catch the Endpoint of a line

Midpoint: To catch the Midpoint of an a line

Intersection: To catch the Intersection of two objects (any two objects)

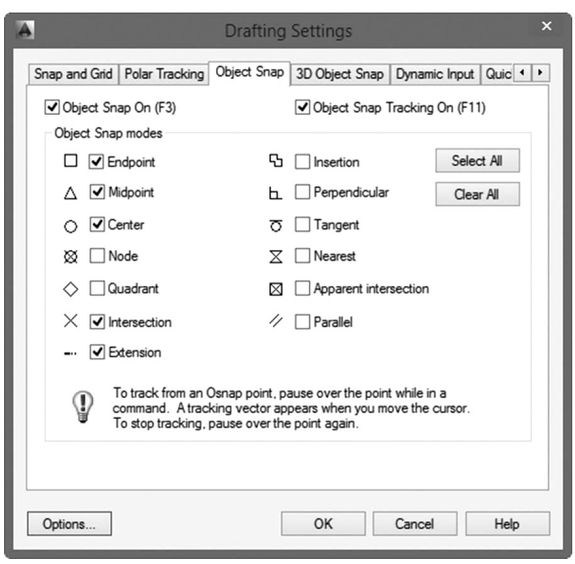

Figure 4 OSNAP Dialogue Box

Perpendicular: To catch the Perpendicular point on an object (any object)

Nearest: To catch a point on an object Nearest to your click point (any object)

F1: Pressing F1 will give more help along with the short notes available in each commands/ icon as shown below.

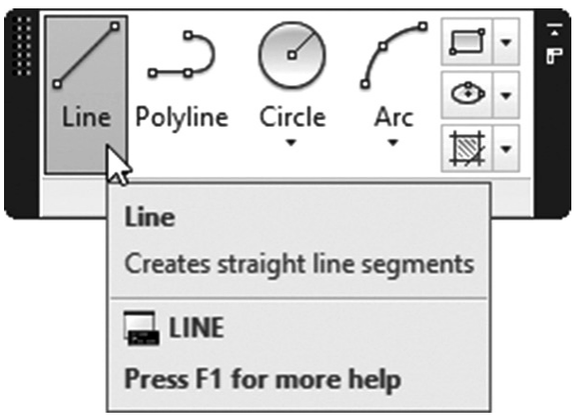

Arrow Up and Down: Arrow Up and Down button used to navigate to the previous commands. After selecting the suitable command and pressing 'Enter' will execute the selected command.

ESC: Pressing ESC button will exit from the present command which is running.

3.4. IMPORTANT COMMANDS

L: It can be used for making simple lines in the drawing.

C: It is the command used for making a circle in AutoCAD.

PL: This command can be used to make a Polyline in your drawing.

REC: This command will make a rectangle in AutoCAD.

POL: This command can be used to make a polygon with a minimum of 3 sides and a maximum of 1024 sides.

ARC: As the name suggests, this command can be used to make an arc in AutoCAD.

XI_BME_CHAP03_2022.indd 46 5/3/2022 10:37:21 AM

ELLIPSE: As the name suggests, this command can be used to make an ellipse with the major and minor axis.

CO: This command is used to copy the object(s) in AutoCAD.

ARRAY: Using this command you can make a Rectangular, polar, or Path array.

TR: This command is used for trimming geometry.

SC: This command is used to change the scale of an object.

B: This command is used for creating a block, the properties of the block can be defined using the block definition window.

I: This command can be used to insert an existing block or a drawing as a block in AutoCAD.

ST: Using this command, you can open a text style window that controls properties of the default AutoCAD text style.

X: This command can be used to explode objects like Polyline to simple lines, an array or a block to simple geometry, etc.

F: This command can be used to add rounded corners to the sharp edges of the geometry, these round corners are also called fillets.

DIMSTYLE: With the use of this command, one can change the style of dimension.

3.5. SHORTCUT KEYS IN AUTOCAD

Ctrl + N: You can use this shortcut to open a new drawing tab in AutoCAD.

Ctrl + S: You can use this keyboard shortcut to save a drawing file.

Ctrl + Shift + S: You can use this keyboard shortcut to save the drawing as a new file, in short, this is the hotkey for the "save as" command.

Ctrl + 0: Clears screen to show only the drawing area and hides palettes and tabs. Press it again to reset the default AutoCAD interface.

Ctrl + 1: Select an object and press Ctrl + 1 to open the properties palette which lists the properties of the object. You can use this palette to modify most of the properties of the object too. You can also use PR command to open the property palette.

Ctrl + 2: You can use it to open the design center palette which contains many AutoCAD blocks that can be used directly in your drawing.

Ctrl + 9: You can use this keyboard shortcut to toggle the visibility of the command line. If for some reason your command line is hidden from the drawing area, then use this keyboard shortcut to bring it back.

Ctrl + C: Select objects from the drawing area and press Ctrl + C to copy to objects to the clipboard.

Ctrl + V: To paste the copied objects of the clipboard in the drawing keeping their original properties, you can use this keyboard shortcut.

Ctrl + Shift + V: To paste the copied objects as a block you can use this keyboard shortcut, the block thus created will have a random set of characters as names. You can use this keyboard shortcut to make blocks quickly without going through the creative block window.

XI_BME_CHAP03_2022.indd 47 5/3/2022 10:37:21 AM

Ctrl + Z: This keyboard shortcut can be used to undo the last action in your drawing. You can press this shortcut key multiple times to undo many actions.

Ctrl + Y: This keyboard shortcut can be used to redo the last undo action which you have performed.

Ctrl + Tab: You can use this keyboard shortcut to cycle through all open drawing tabs in AutoCAD.

3.6. SETUP COMMANDS

UNITS: Choose the appropriate decimal points based on the required precision. Set specified units. (Ex. To mark the dimension of 2.75 mm, choose decimal 0.00 as it is precise to 2 decimal units and set units to millimetres)

LIMITS: This command fix the size of graphical area. Specifying lower and upper limits fixes the dimension of paper on which drafting is to be done. (Ex. (0, 0), (420, 297) will fix the paper size as A3)

ZOOM: Type this zoom command, select all and press enter.

UCS: The user coordinate system (UCS) establishes the location and orientation of a movable Cartesian coordinate system. By default, the origin is at (0, 0). All the pictures are drawn in I quadrant. Use the UCS command, Origin option to relocate the origin to one side of the shape so that the values in both X and Y will be correct. If you leave the origin to the current UCS origin, the values inserted may be wrong.

3.7. ABSOLUTE AND INCREMENTAL COORDINATE REFERENCES

AutoCAD user can choose, how the diagram is to be drawn with the use of coordinates.

Absolute Coordinate Reference: The positioning of points is done with reference to the origin (0, 0).

Ex.: Consider a line of 100*mm* with starting point $(x_1, y_1) = (20, 20)mm$ is to be drawn parallel to x – axis, then the second point with reference to the origin is to be positioned at $(x_2, y_2) = (20, 120)$ *mm*. Here, the difference in Y coordinate provides the original length of line as 120 – 20 = 100 *mm*.

Incremental Coordinate Reference: The positioning of the consecutive points (x_n, y_n) is done with reference to the position of previous point (x_{n-1}, y_{n-1}).

Ex.: Consider a line of 100 *mm* with starting point $(x_1, y_1) = (20, 20)$ *mm* is to be drawn parallel to x – axis, then the second point with reference to the position of previous point is positioned at $(x_2, y_2) = (0, 100)mm$ which denotes no change in value of X, and 100 mm change in value of Y. Here, the value of Y provides the original length of line directly as 100 *mm*.

3.8. USING THE AUTOCAD COMMANDS

Step 1: Select required tool in ribbon (or) type the respective command in command window

Step 2: Choose the appropriate options available in each commands respective to the requirement

Step 3: Draw and finish the respective shape

XI_BME_CHAP03_2022.indd 48 5/3/2022 10:37:22 AM

Example:

Drawing a line.

Step 1: Type the command 'LINE' in command window and press Enter.

Step 2: Specify first point (Can manually enter the co-ordinates or select a random point on screen by 'left click' on the mouse)



Step 3: Specify next point by moving the cursor and left click the cursor at the respective position or type the co-ordinate manually and press the Enter button.

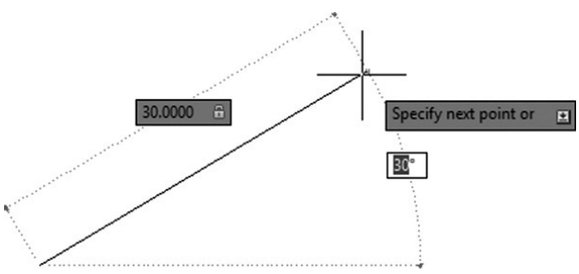

(Think and check: Is it possible to draw the line as shown in the above figure with ORTHOMODE On?)

3.9. LAYERS IN AUTOCAD

Layers are a simulation of a transparent piece of paper in which you will draw part of the drawing using a certain color, linetype, and lineweight. This setting is called BYLAYER, which means we will control the drawing through controlling layers rather than controlling objects.

Ex.: Using layers to alter the type of line

- Using the Layer Properties Manager, select the desired layers
- Using the Linetype field, click the name of the linetype, and you will see the following dialog box:

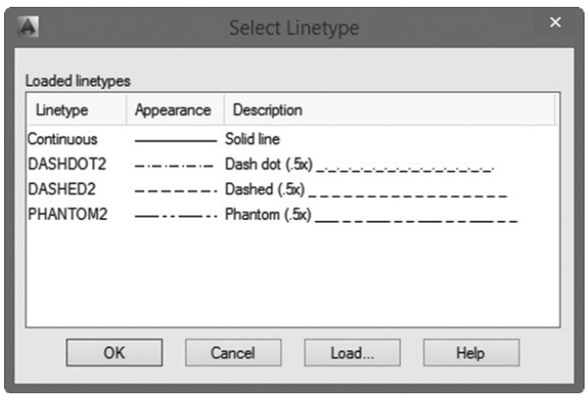

- If the desired linetype is listed, then select it.
- If not, you need to load it. Click the Load button, and you will see the following dialog box:

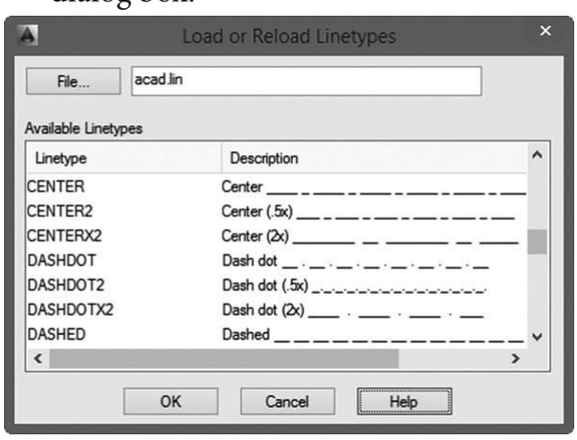

- Browse for your desired linetype, select it to be loaded, then click OK. Now the linetype is loaded, you can select it and then click OK.

(Note: Similar to the above example, using layers we can set Lineweight, colors, etc.)

3.10. DIMENSIONING IN AUTOCAD

- Dimensioning contain following three components:

XI_BME_CHAP03_2022.indd 49 5/3/2022 10:37:22 AM

1. Dimension line
2. Dimension text
3. Extension line

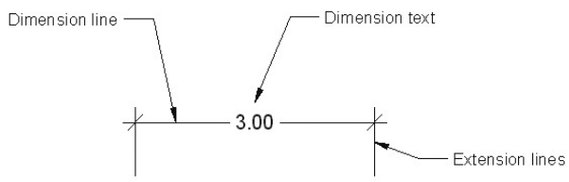

- Types of dimensions:
  1. Linear (Dimensioning the lines/ between two points along X, Y and Z axis)
  2. Aligned (Dimensioning the lines/ between two points along inclined directions)
  3. Arc length, Radius, Diameter (Arc and circles)
  4. Angular (Angle between lines)

- Inserting a dimension.

Ex.: Go to **Annotate** tab, locate the dimensions panel, and then select the **Angular button**

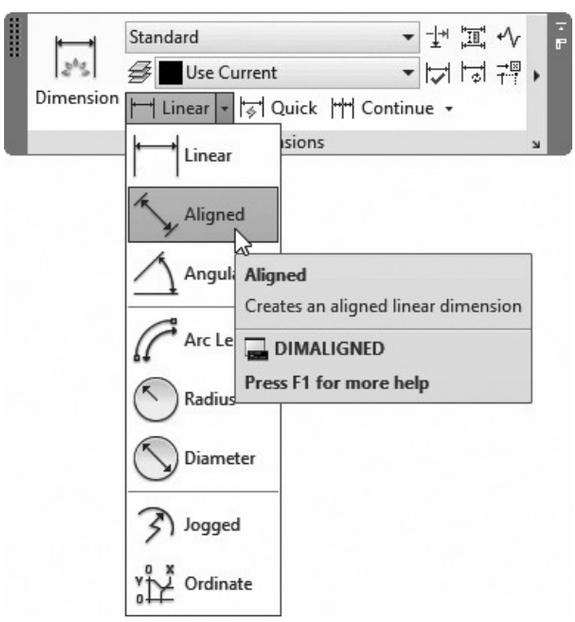

- Select the inclined line and move the cursor, the angular dimension with respect to any one of the axis can be marked.

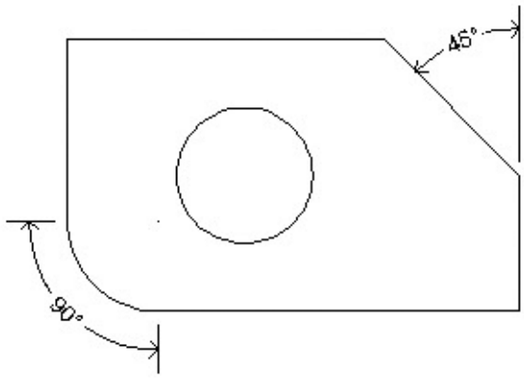

- AutoCAD may use one of the following methods based on the selected objects:
  1. If you select a circular arc, AutoCAD will measure the included angle
  2. If you select a circle, your selecting points will be the first point, the center of the circle will be the second point, and then the user will select the third point
  3. If you select a line, it will ask you to select a second line
  4. If you select a point, it will be considered as a center point, and AutoCAD will ask the user to specify two more points
- Using DIMSTYLE command, we can alter the style of texts (Font height, spacing, arrow size, tolerances etc.)

(Note: Under Annotation hatching can be done. Hatching is used to differentiate the normal plane and cutting plane. It is used to show the true shape of the object as well as the cut portion.)

XI_BME_CHAP03_2022.indd 50 5/3/2022 10:37:22 AM

3.11. EXPORTING DWG FILE TO PDF

After choosing proper Layout, Go to Output tab, locate the export to DWF/ PDF panel, then select Export button and click PDF.

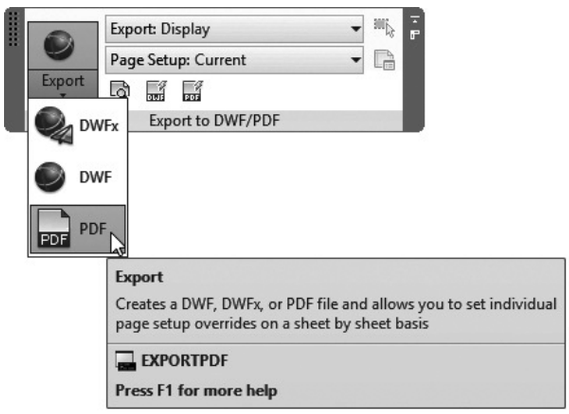

QUESTIONS

PART A

I. Choose the correct option :

1. Which function is used for getting help on unknown command?
   a) F1
   b) F8
   c) F3
   d) F5

HR6VQ

2. Which of the following is used to know the direction of drawing?
   a) Navigation Bar
   b) View Cube
   c) Cross Hairs
   d) Status Bar

3. This function helps in aligning the lines by
   a) OSNAP
   b) RIGHTALIGN
   c) ORTHO
   d) XALIGN

4. The command 'PL' is used to draw the _____.
   a) Simple Line
   b) Poly Line
   c) Polygon
   d) Perpendicular Line

5. Which keyboard shortcut can be used to undo the last action in your drawing?
   a) Ctrl + Shift + V
   b) Ctrl + C
   c) Ctrl + G
   d) Ctrl + Z

PART B

II. Answer the following questions in one or two sentences:

6. Compare OSNAP and ORTHOMODE function of AutoCAD.

7. Write a note on the following:
   a. View Cube
   b. Navigation Bar

XI_BME_CHAP03_2022.indd 51 5/3/2022 10:37:22 AM

8. Differentiate: Graphical Area and Workspace.

9. Write down the functions of the following in AutoCAD:
   a. Pressing ESC
   b. Pressing ENTER
   c. Arrow UP and Arrow DOWN

10. Brief on setup commands in AutoCAD.

PART C

III. Answer the following questions in about a page?

11. Explain any five Object snaps and its usage.

12. Compare and contrast the absolute and incremental coordinate references with suitable example.

13. Explain the importance of using layers in AutoCAD. How the linetype is defined using layers in AutoCAD?

PART D

IV. Answer the following questions in detail:

14. Describe about the various shortcut keys used in AutoCAD.

15. Describe the parts, types, and methods of dimensioning done in AutoCAD.

XI_BME_CHAP03_2022.indd 52 5/3/2022 10:37:22 AM

CHAPTER

4

STANDARDISATION



LEARNING OBJECTIVES

1. To know about the definition of standardization, interchangeability and fits.
2. To know about ISO, BIS and its functions.

TABLE OF CONTENT

4.1. Introduction
4.2. Standardisation
4.3. Interchangeability
4.4. Fit
4.5. International Organisation for Standardization (ISO)
4.6. Bureau of Indian Standards

4.1 INTRODUCTION

- When we manufacture a machine, we need thousands of components. To accomplish this, various materials are used. The required parts are machined in various machines. In the olden days, the conventional machine is used like lathe, drilling machine, shaping machine, milling machine, grinding machine etc. But now a days, CNC and NC machines are used to reduce the production time and cost with very high accuracy as they needed. Man power has reduced and machine power has increased to achieve the required quality of the components.
- The components accuracy depends on the machine accessories, tool materials and angles. But it is not always possible to keep exact measurement in mass production. If sufficient time is given, any operator would work and maintain the sizes with in a close degree of accuracy. Hence, tolerance was introduced, it helps to increase the production and to achieve the required fits. The same standards follow all over the world which helps their sales internationally.

XI_BME_CHAP04_2022 .indd 53 25-01-2023 13:25:05

4.2. STANDARDISATION

Standardization is the process of creating protocols to guide the creation of a goods or service based on the consensus of all the relevant parties in the industry.

Standardization means to determine standards related to size, quality, allowance, process, design, weight, color etc., of the product. It helps in ensuring uniformity in the quality of the product.

4.3. INTERCHANGEABILITY

If a part of the machine breaks or wears, it should be replaced by new one. The new one should be fit correctly with the machine even it produced by any industry or country or state.

For this purpose, the parts are produced with actual size. The actual size may increased or decreased with some extent. The allowed maximum and minimum sizes are given to the machine parts. Then only produced parts are fitted with mating parts accurately. The process of manufacturing parts with dimensional variation within certain limits for fitting purpose to mating parts accurately is called interchangeability.

4.3.1. Advantages of Interchangeability

- The assembly of mating parts is easier.
- The rate of waste in mass production becomes less.
- It reduces assembly time and cheaper by employing unskilled worker.
- Random assembly of components is possible. It reduces cost of production.

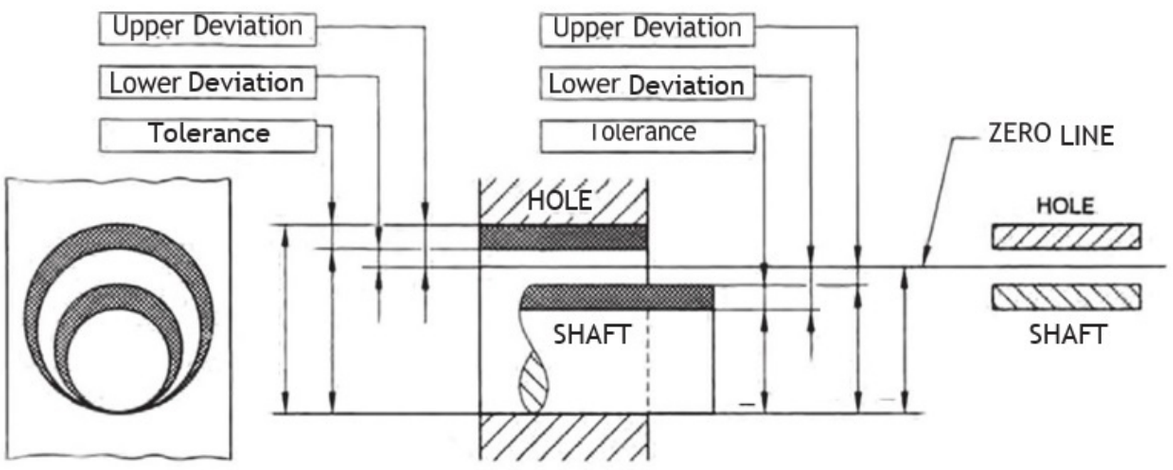

Figure 1 Basic Terminology in Interchangeable System

XI_BME_CHAP04_2022 .indd 54 25-01-2023 13:25:05

4.3.2. Basic Terminology in Interchangeable System

Terminology	Description
Shaft	The shaft indicates the outer diameter of a cylindrical profile, but also represents any external dimension of a component.
Hole	The hole indicates the inner diameter of a cylindrical hole but also represent any internal dimensions of a component.
Basic Size	Basic size of a dimension is the size in relation to which all limitsof variations are determined. This is fixed up by designer considering its functional aspects without indicating any tolerance.
Actual size	It is defined as the size of actually obtained by machining. It isfound by measurement using measuring instruments.
Limits of Size	Limits are the two extreme permissible sizes of any dimension, the actual size should lies between these two limits of sizes.
Deviation	The algebraic difference between the actual size and its corresponding basic size is called deviation.
Upper Deviation	It is defined as the algebraic difference between the maximum limitof size and the corresponding basic size.
Lower Deviation	It is defined as the algebraic difference between the minimum limit of size and the corresponding basic size.
Zero Line	The deviations are always measured from basic size. Therefore, to represent limits and fits graphically, a straight line is drawn for basic size. This line is called zero line because the deviation at the basic size is zero. When zero line is drawn horizontally deviations above this line will be positive and below it will be negative. The sign + is added with positive and the sign is added with negative deviations.

4.3.3. Tolerance

Tolerance is the difference between the maximum limit of size and minimum limit of size.

There are two basic ways of specifying the tolerance

1. Unilateral Tolerance
2. Bilateral Tolerance

Unilateral Tolerance: In this system, the tolerance is allowed to only one side of the basic size. Parts manufactured will fall close to the desired dimension but can vary in only one direction.

Example

Component Size	Basic size	Maximum limit	Minimum limit
$20^{+0.02}_{-0.00}$	20.00 mm	20.02 mm	20.00 mm
$20^{+0.00}_{-0.02}$	20.00 mm	20.00 mm	19.98 mm

Bilateral Tolerance: In this system, the tolerance is allowed to both sides of the basic size. One limit will be above basic size and other limit below the basic size.

Example

Component Size	Basic size	Maximum limit	Minimum limit
$35^{+0.02}_{-0.02}$	35.00 mm	35.02 mm	34.98 mm

XI_BME_CHAP04_2022 .indd 55 25-01-2023 13:25:05

4.4. FIT

The relation between two parts where one is inserted into the other with certain degree of tightness or looseness is known as fit.

4.4.1. Types of fit

Depending upon actual limits of the hole and the shaft, fit can be divided into three types.

1. Clearance Fit
2. Interference Fit
3. Transition Fit

Clearance Fit: If the size of hole is larger than the size of the shaft, then it is called as clearance fit. This results in two conditions. They are maximum clearance and minimum clearance.

In maximum clearance the hole has the maximum diameter and the shaft has the minimum diameter. In minimum clearance, the hole has minimum diameter and shaft has maximum diameter.

Example: Bush bearings and channel bearings are fitted with clearance fit.

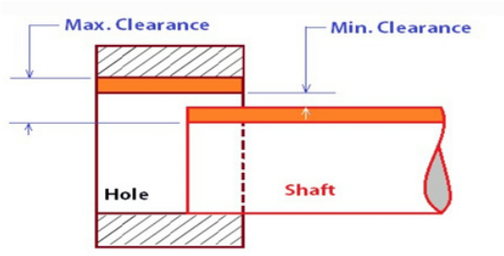

Figure 2 Clearance Fit

Interference Fit: If the size of the hole is smaller than the size of the shaft, then it is called as "interference Fit". This is also known as "press fit" or "friction fit". This results in two conditions. They are maximum interference and minimum interference.

In maximum interference, the hole has minimum diameter and the shaft has maximum diameter. In minimum interference, the hole has maximum diameter and the shaft has minimum diameter.

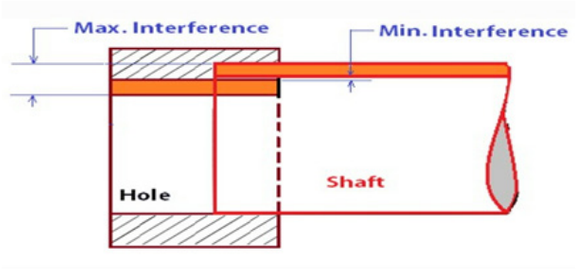

Figure 3 Interference Fit

Transition Fit: If the size of hole is equal to the size of shaft, then it is called as "Transition Fit". This is also known as "push fit" or "slip fit". These fits fall between clearance and interference fits and are suitable for situations in which accuracy is very important.

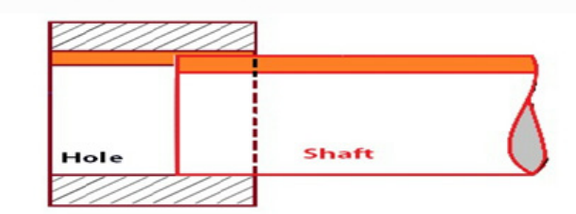

Figure 4 Transition Fit

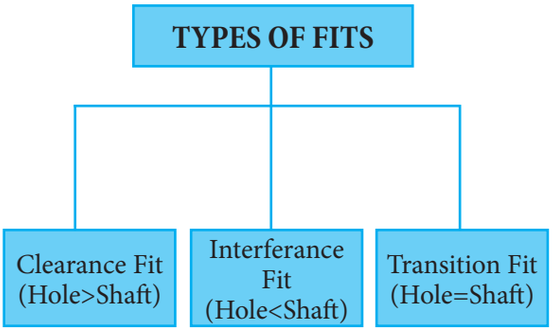

XI_BME_CHAP04_2022 .indd 56 25-01-2023 13:25:05

4.4.2. Systems of fit

To determine the fit, we must take one component as the constant member and the second component will have the deviations according to the type of fit chosen.

By making a constant member we can classify them as hole basis system and shaft basis system. These are the two bases of the limit system.

Hole Basis System

In a hole basis system, the hole is kept as the constant, and the shaft upper and lower deviation values determine the type of fit. In a hole basis system, the Lower deviation of the hole will be Zero.

Example:

Nominal Size of Hole 36mm
Hole = 36.000/36.015

(Clearance Fit) Shaft = 35.980/35.990
(Maximum Clearance = 0.035; Minimum Clearance = 0.010)

(Transition Fit) Shaft = 35.990/36.010
(Maximum Clearance = 0.030; Maximum Interference = 0.010)

(Interference Fit) Shaft = 36.010/36.020
(Maximum interference = 0.020;
Minimum Interference = 0.005)

Shaft Basis System

In the Shaft basis system, the shaft is kept as the constant, and hole upperand lower deviation values determine the type of fit. In the shaft basis system, the upper deviation of the shaft will be Zero.

Example:

Nominal Size of shaft 25mm
Shaft = 24.985/25.000

(Clearance Fit) Hole = 25.010/25.020
(Maximum Clearance = 0.035; Minimum Clearance = 0.010)

(Transition Fit) Hole = 24.990/25.010
(Maximum Clearance = 0.025; Maximum Interference = 0.010)

(Interference Fit) Hole = 24.980/24.990
(Maximum interference = 0.020;
Minimum Interference = 0.005)

Out of these two bases of limits systems, hole basis system is preferred over shaft basis system due to from manufacturing perspective it is easy to adjust the shaft dimension by using grinding or turning operation whereas holes are produced with drilling operations and it becomes complicated to do any further turning or grinding operations in holes.

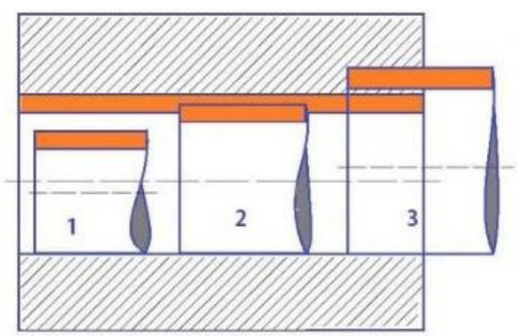

Hole Basis System

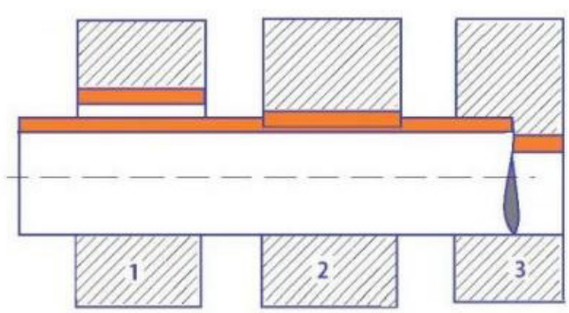

Shaft Basis System

1. Clearance 2. Transition 3.Interference

XI_BME_CHAP04_2022 .indd 57 25-01-2023 13:25:05

4.5. INTERNATIONAL ORGANISATION FOR STANDARDIZATION (ISO)

The ISO plays and important role in facilitating world trade by providing common standards among different countries. These standards are intended to ensure that products and services are safe, reliable and of good quality.

Functions of ISO

1. Make the technical development, manufacturing and supply of products and services more efficient, safer and cleaner.
2. Make the trades and marketing easier between countries.
3. Provide governments with a technical base for halth and consumer goods.

4.6. BUREAU OF INDIAN STANDARDS

The bureau of Indian standards (BIS) is the national level organization. (Formerly known as "Indian standards institution). Its main objective is create quality standards for consumer and industrial products. We found ISI symbol on many Indian products. It is a certification mark given by the BIS. A producer who wants to adopt a standard for his product has to obtain ISI symbol from BIS.

BIS was established by the bureau of Indian standard ACT 1986 which came into effect on 23 December 1986. BIS provides quality assurance of goods produced in India. BIS is responsible for standardization and certification of Indian products.

Functions of BIS

1. BIS gives quality standards for consumer and industrial goods national level.
2. It gives quality certification of goods and "ISI"
3. BIS provides assurance for any product's quality, reliability and safety to the consumers.

Glossary

1.	Standardization	தரநிர்ணயம்
2.	Interchangeability	பொருந்தும் தன்மை
3.	Tolerance	ஏற்கப்படும் அளவு வேறுபாடு
4.	International Organisation for Standardization(ISO)	சர்வதேச தரநிர்ணய நிறுவனம்
5.	Bureau of Indian Standards(BIS)	இந்திய தரநிர்ணய நிறுவனம்

Activities

1. Visit near industry and look out for some-time in the inspection department.
2. Take and assemble the same make and model of pen parts.

XI_BME_CHAP04_2022 .indd 58 25-01-2023 13:25:05

QUESTIONS

PART A

I. Choose the correct option :

1. The system that enables parts of equivalent sizes with dimensional variation within certain limits to be fit operating is
   a) Limits
   b) Unilateral
   c) Deviation
   d) Interchangeability



2. If the size of the hole is smaller than the size of shaft, then type of fit is
   a) Interference fit
   b) Clearance fit
   c) Transition fit
   d) Slip fit

3. If the size of the hole is larger than the size of shaft, then type of fit is called as
   a) Interference fit
   b) Clearance fit
   c) Transition fit
   d) Slip fit

4. The algebraic difference between the actual size and its corresponding basic size is called
   a) Maximum limit
   b) Deviation
   c) Tolerance
   d) Minimum limit

5. If accuracy is very important, what type of fit you have choosen
   a) Interference fit
   b) Clearance fit
   c) Transition fit
   d) Friction fit

PART B

II. Answer the following questions in one or two sentences:

6. Define 'Interchangeability'?
7. What do you mean by limits of size?
8. What is fit?
9. What is 'Basic Size'?
10. Write short notes on the types of deviations?
11. What are the functions of ISO?
12. What are the functions of BIS?

PART C

III Answer the following questions in about a page?

13. What is tolerance? Explain its types.
14. Explain about the systems of fit

PART D

IV. Answer the following questions in detail:

15. Explain the basic terminology used in interchangeability?
16. Explain the three types of fits?

XI_BME_CHAP04_2022 .indd 59 25-01-2023 13:25:05

CHAPTER

5

FOUNDRY

LEARNING OBJECTIVES

1. To know about the Foundry, materials using in Foundry , pattern materials, types of patterns, Moulding tools and Moulding sand.
2. To know about the classification and properties of moulding.

TABLE OF CONTENT

5.1. Introduction
5.2. Pattern
5.3. Moulding
5.4. Core

5.1 INTRODUCTION

- Various manufacturing processes are available for producing a component with required shape. Casting is one the processes used for making component of complicated shapes in large numbers. The parts obtained by pouring the molten metal into the mould cavity and solidification are known as castings. The processes of making required shape in moulding sand with the help of a patterns is known as moulding. The cavity produced by pattern is known as mould or mould cavity. The place where moulding, melting and casting are done is known as foundry

5.2. PATTERN

Pattern is the model of casting. It is made of wood, metal or plastics. Mould is produced in moulding sand by using pattern.

5.2.1. Pattern Materials

The following materials are used for making patterns.

- Wood
- Metal
- Plaster of Paris
- Plastic
- Wax

XI_BME_CHAP05_2022.indd 60 25-01-2023 13:32:50



Figure 1 Foundry Work

Wood: Wood is widely used for making pattern. It is easy to work and readily available. Generally pattern is made from teak wood, mahogany, Pine and rose wood. The surface finish of the pattern and its life can be increased by applying metal coating on the wood pattern. Zinc , Aluminium are used as coating material on the surface of the wood upto 2.5mm.

Metal: Metal pattern is used for producing large number of castings. Metal pattern is made by using a master pattern. The master pattern is made of wood. Cast iron, Brass, Aluminium and white metal are commonly used for making Metal pattern. Aluminium is the best metal for pattern making. Brass is suitable for small size patterns. White metal can be used for making patterns for complicated shapes.

Plaster of paris: The gypsum cement is known as Plaster of Paris. Pattern is made by pouring the mixture of Plaster of Paris and water into the mould prepared by master pattern. It is used for making small patterns.

Plastics: Plastic patterns are produced from a master pattern made of wood. The two types of plastics materials are used for pattern making namely, thermo setting and thermo plastics. Pattern made of thermo plastics used for producing less number of pattern. But Thermo setting plastics are used for large number of pattern.

Wax: The liquified wax or semi solid wax is injected into a split die. Then the die is cooled and the wax pattern is taken out. This type of patterns are smaller in size.This pattern is produced from paraffin wax, shellac wax, bees wax, ceresin wax and micro crystalline wax.

5.2.2. Factors for Selecting Pattern Materials

The following factors are to be considered for selecting the pattern materials.

- Number of castings to be produced
- Quality of the casting
- Size and shape of the casting
- The method of mould and casting
- Required surface finishing of casting
- Required accuracy of casting
- Cost of the casting material
- Easily available in the market
- Withstand high temperature
- Does not change its shape.

XI_BME_CHAP05_2022.indd 61 25-01-2023 13:32:50

5.2.3. Types of Patterns

The following types of pattern are generally used in foundry.

- Single Piece Pattern
- Split Pattern
- Match Plate Pattern
- Loose Piece Pattern

Single Piece Pattern: The pattern made of single piece without joints is known as solid pattern. This pattern is used for making small casting with simple shape. Solid pattern can be easily removed from the moulding sand.

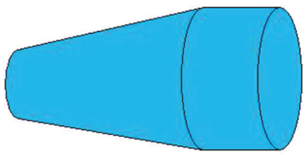

Figure 2 Single Piece Pattern

Split Pattern: Some patterns cannot be removed from the mould, if they are made in single piece. So, spilt patterns are used in that time. Split patterns are usually made of two parts. One part will make the lower half of the mould and the other part will make the upper half of the mould. These two parts are fixed correctly by dowel pins. Split pattern are also made in three or four parts. They are used for producing symmetrical casting such as cylinders, spindles, pipes, shafts etc.

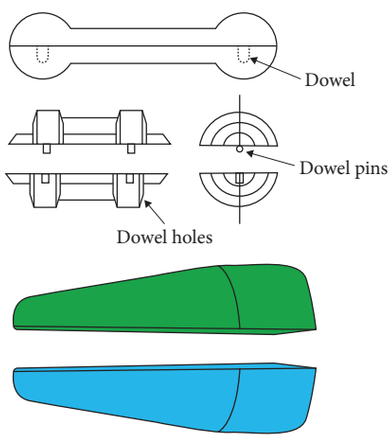

Figure 3 Split Pattern

Match Plate Pattern: This pattern has a match plate made of aluminium. split metal patterns are fitted on both sides of the match plate. One half of the pattern is fitted on one side of the match plate. The other half is fitted directly opposite on the other of the match plate.

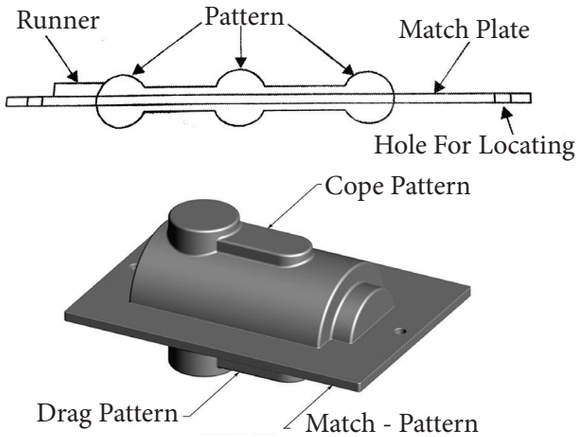

Figure 4 Match Plate Pattern

Loose Piece Pattern: Some patterns cannot be removed from the mould as single piece. So loose piece patterns are used with the solid pattern for the easy removal. After moulding, the solid pattern is removed first then the loose pieces are removed without damaging the mould. This pattern is used for producing complicated casting of large size.

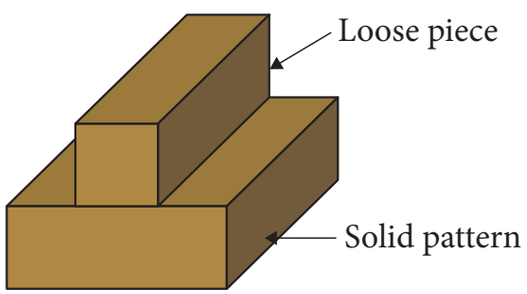

Figure 5 Loosen Piece Pattern

5.2.4. Pattern Making Allowances

Patterns are made to correct size of the required casting. They are made slightly larger than the required casting. This extra

XI_BME_CHAP05_2022.indd 62 25-01-2023 13:32:51

dimension given to the pattern is called allowance. Pattern allowances are given to compensate the metal shrinkage, to avoid metal distortion, to withdraw the pattern easily from the mould. The various types of allowances are

- Shrinkage allowance
- Machining allowance
- Draft allowance
- Distortion allowance
- Rapping allowance

5.3. MOULDING PROCESS

To make something into a desired shape by pouring molten metal into a mould.

The process of making mould is called moulding. It includes filling of moulding sand around the pattern, ramming, removing the pattern, making runner, riser, gate and vent holes

5.3.1. Moulding Tools

The following moulding tools are used in the foundry.

Name of the tools	Picture	Uses
Shovel		For mixing and transferring the moulding sand into moulding box.
Riddle		It is used to clean the mould sand by removing unwanted materials
Rammer		Rammer is used for packing or ramming the moulding sand in the moulding box.
Trowel		It is used to smoothen the mould surface and to repair the damaged portions of the mould
Slick	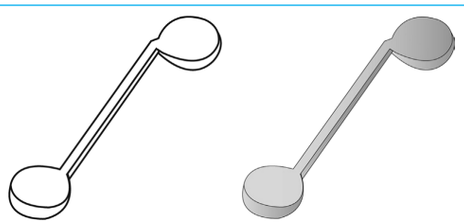	For finishing mould surface and for repairing the round corners of the mould.

XI_BME_CHAP05_2022.indd 63 25-01-2023 13:32:51

Lifter	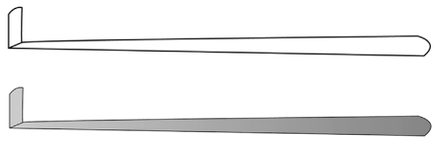	To remove the loose sand from the mould and to repair the broken surface of the mould.
Strike Off Bar	 	For removing excess sand from the mould after ramming.
Sprue Pin	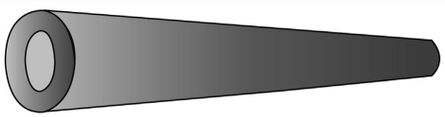	For making holes for runner and riser in the mould.
Bellows		For blowing off loose sand particles from the mould.
Swab		for applying small amount of water around the pattern before removing it from the mould
Gate Cutter		For cutting gate in the mould.
Draw Spike		For removing the pattern from the mould
Vent Rod	 	For making small holes on the mould. During casting, the steam and gases escape through these holes
Mallet	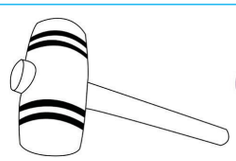 	To fix the draw spike into the pattern by hammering

XI_BME_CHAP05_2022.indd 64 25-01-2023 13:32:51

5.3.2. Moulding Boxes

Moulding box is used to prepare Sand mould. It is a frame, made of wood or metal. It is box with both the bottom and top surfaces are opened. If the moulding is done with two boxes, the upper box is called cope and the lower box is called drag. The two box are aligned correctly with the help of dowel pin. If the moulding is done with three boxes, the middle box is called cheek.

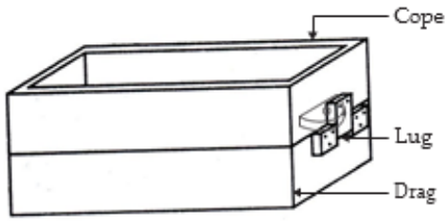

Figure 6 Box

5.3.3. Moulding Sand

Moulding sand is an important in foundry. It can withstand the high temperature of molten metal. It does not react with molten metal. It permits the gases and air to escape from the mould when the molten metal is poured. Due to these properties of moulding sand, it is used for casting.

5.3.4. Moulding Sand Ingredients

Moulding sand has the following ingredients

- Sand
- Binder
- Additive

Sand: It contains silica, clay and moisture. Sand has 80 to 90% silica which gives refractoriness. It contains 5 to 20% clay which gives binding strength. 2 to 3% of water is added with the sand to give moisture.

Binder: Binder is added with the moulding sand to obtain strength and plasticity. Clay binders are commenly used .

Additives: Additives are added with the moulding sand to improve the properties like strength, permeability and thermal stability. The following three types of additives are used.

- **Reducing Agents:** Coal dust, fuel oil and sea coal are some reducing agents.
- **Fibrous Material:** Straw, cow dung, asbestos and saw dust are some fibrous materials.
- **Special Additive:** Dextrin and molasses are some special additives.

5.3.5. Classifications of Moulding Sand

Moulding sand are classified as follows:

1. Natural Sand
2. Synthetic Sand
3. Special Sand

Natural Sand: Natural sand is available at river beds. It contains 80 to 90% silica, 5 to 10% alumina or clay and small amount of lime and magnesia. Natural sand is used to make casting in ferrous and non-ferrous metals.



Figure 7 Natural Sand or Green Sand

Synthetic Sand: Synthetic sand is prepared to obtain required properties by adding some ingredients with the natural sand. Bentonite, water, ironoxide, calcium

XI_BME_CHAP05_2022.indd 65 25-01-2023 13:32:52

and magnesium are mixed with natural sand. Synthetic sand is used in machine moudling and high pressure moulding.



Figure 8 Synthetic Sand

5.3.6. Properties of Moulding Sand

A good moulding sand should have the following properties.

1. Porosity
2. Plasticity
3. Adhesiveness
4. Cohesiveness
5. Refractoriness
6. Collapsibility

5.3.7. Parting Sand

It is a sand without binder and moisture. It is used to avoid sticking of moulding sand on the patterns and act as a parting surface between cope and drag boxes. Mostly this will be clean clay-free silica sand.

5.3.8 Gating System

Gating system consists of pouring cup, sprue, runner, gate and riser.

Pouring Cup: It is the funnel shaped portion on the top of the sprue. Molten metal is poured easily through this cup.

Sprue: It is the hole which connects the pouring cup to the runner. Molten metal passes through the sprue to the runner.

Runner: Runner supplies molten metal from sprue to different gate.

Gate: It connects the runner and the mould. Molten metal enters the mould through the gate.

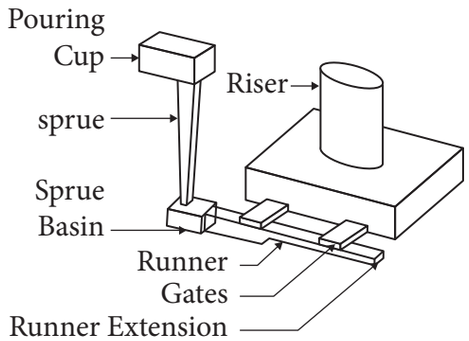

Figure 9 Gating System

Riser: It is a hole on the cope portion. After the mould is filling up, the excess molten metal overflow through the riser.

5.3.9. Types of Moulding

The various types of moulding are follows:

1. Green Sand Moulding
2. Dry Sand Moulding
3. Bench Moulding
4. Floor Moulding
5. Machine Moulding

Green Sand Moulding: The green sand does not mean that it has a green colour. But the sand which is moist condition at the time of pouring the molten metal. The following is the step by step procedure of making green sand mould using a split pattern.

XI_BME_CHAP05_2022.indd 66 25-01-2023 13:32:53

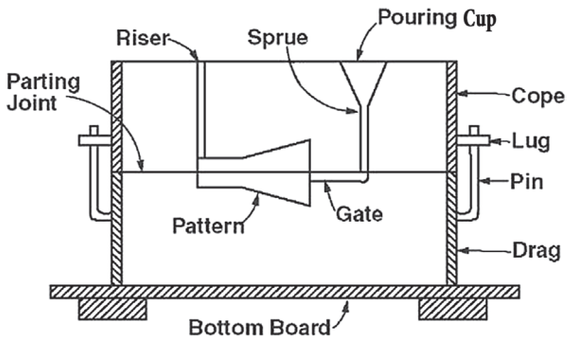

Figure 10 Green Sand Moulding

1. One half of the pattern is placed on the moulding board.
2. Drag box is placed upside down on the board and parting sand is sprinkled over the pattern.
3. 20mm layer of facing sand is filled around the pattern. Then green sand is filled in the box.
4. Ramming is done uniformly by using rammer.
5. Excess sand is removed and leveled by strike off bar.
6. Vent holes are made. The box is tilted upside down.
7. The cope box and another half of the pattern are placed correctly. Parting sand is sprayed over the pattern.
8. The runner pin and riser pin are placed in the cope box at correct position. Then facing sand and moulding sand are filled.
9. Ramming is done uniformly. Vent holes are made.
10. Runner pin and riser pin are removed and pouring cup is made.
11. Cope and drag boxes are separated so as to remove the pattern.
12. Draw spike is driven into pattern pieces and shaken lightly in all direction. Then pattern pieces are withdrawn slowly.
13. Runner and gate are cut in drag portion.
14. Core is placed in the mould if necessary.
15. The cope and drag boxed are assembled in correct position and weight is placed over the cope. Now molten metal can be poured in the mould for producing casting.

5.4. CORE

A core is used for making hollow casting. Any hollow shape can be produced by using Core.

Core making: The shape of the core must be similar to the required hollow in the casting. Core sand is used for making core. The core sand is a mixture of dry silica sand 94%, water 2.3% core oil 1.4% and starch 1.4%.

GLOSSARY

1. Pattern	மாதிரிவடிவம்	7. Slinger	வீசுதல்
2. Mould	அச்சு	8. Porosity	புரைமை
3. Casting	வார்ப்பு	9. Plasticity	நெகிழித்தன்மை
4. Riddle	கம்பிவலை சல்லடை	10. Cohesiveness	ஒட்டுத்தன்மை
5. Squeezing	அழுத்துதல்	11. Refractoriness	வெப்பந்தாங்கும் தன்மை
6. Jolt	குலுக்குதல்		

XI_BME_CHAP05_2022.indd 67 25-01-2023 13:32:53

ACTIVITIES

1. Visit near the foundry and watch how moulding is performed.
2. Use clay and plastic container or box to make a moulded model.

QUESTIONS



PART A

I. Choose the correct option :

1. Which material is used for making master pattern
   a) Wood
   b) Metal
   c) Wax
   d) Plastic

2. Material is used for producing less number of patterns
   a) Wood
   b) Thermo plastic
   c) Wax
   d) Casting

3. This instrument is used to clean the mould sand by removing unwanted materials
   a) Shovel
   b) Bellows
   c) Slick
   d) Riddle

4. The raw material of the moulding sand is
   a) Wax
   b) Glass
   c) Binder
   d) Rubber

5. Which is used for making hollow casting
   a) Dowel pin
   b) Core
   c) pattern
   d) Moulding box

PART B

II. Answer the following questions in one or two sentences:

6. What are the materials used to make pattern?
7. What is moulding box?
8. How do you choose the material used for making 'pattern'?
9. What is the use of 'Rammer'?
10. What are the types of 'Moulding Sand'?

PART C

III. Answer the following questions in about a page?

11. List out the moulding Tools?
12. Explain characteristics of 'Moulding Sand'?
13. List out the types of moulding?
14. What are the raw materials to make the moulding Sand? Explain any one.
15. Explain the parts of the 'gating System'?

XI_BME_CHAP05_2022.indd 68 25-01-2023 13:32:53

PART D

IV. Answer the following questions in detail:

16. List out moulding tools and draw the neat sketch of any two and explain it?
17. Draw and Explain moulding boxes and give their uses?
18. Explain the methods of green sand moulding?
19. List out the materials for making patterns and explain any two of it?

XI_BME_CHAP05_2022.indd 69 25-01-2023 13:32:53

CHAPTER

6

ENGINEERING MATERIALS AND HEAT TREATMENT

LEARNING OBJECTIVES

1. To know about the various Engineering Materials and their properties and their types.
2. To know about the metals and non-metals and Ferrous and non-ferrous metals, steels and cast Iron.
3. To know, the uses of all Engineering materials.
4. To know the purpose of heat treatment.
5. To know about the heat treatment of metals.
6. To know about the various process and types of heat treatment furnace.

TABLE OF CONTENT

6.1 Introduction
6.2. Engineering Materials
6.3. Properties of Materials
6.4. Metals
6.5. Heat Treatment
6.6. Purpose of Heat Treatment
6.7. Lower and Higher Critical Temperature
6.8. Method of Heat Treatment
6.9. Quenching
6.10 Heat Treatment Furnaces
6.11 Properties of Materials with Treatment

6.1 INTRODUCTION

- In General, material may be anything else, it is consisting of whether pure or impure, single or composite. It may be a solid, liquid, and gas. Materials can be classified based on different properties, such as physical and chemical properties, etc.
- In Industry, Materials are input for production or manufacturing processes. They may be raw material to produce things in engineering fields. Synthetic materials are used in other fields like Medical, Textile and Home Appliances. Medicines, textile, petrol, fuels, soaps, glass, polymers, cements, etc., are synthetic materials. The materials are either natural or artificial.

XI_BME_CHAP06_2022 .indd 70 25-01-2023 15:06:01

- Natural materials are sand, clay, stone, lime wood, etc. The artificial materials are made from natural things.
- Different types of materials are used for different application according to their properties.
- To enhance such properties of the material some treatments are applied on them. On that heat treatment is a prominent method used in engineering field to enhance the properties of the materials.

6.2 ENGINEERING MATERIALS

If we would like to fabricate an engineering part, like a hacksaw blade, we must go in search of material, like high carbon steel high speed steel which possess desirable properties as will permit the blade to perform its function successfully while in use. That is, any tool or cutting materials, should have high strength , high toughness, high hardness and high corrosion resistance. Tungsten carbide, vanadium carbide, molybdenum steels are used as tool or cutting materials using advanced technology, the high strength, abrasion resistance and heat resistance properties of metals are enhanced.

6.3 PROPERTIES OF MATERIALS

The practical application of engineering materials in manufacturing a component, we must have a thorough knowledge of their particular properties under a wide range of conditions. However, different materials have different types of properties, a few of them have important properties that are used in our engineering field.

Classification of properties	Description	Examples
Physical	Physical properties can be measured or observed without changing the composition of matter.	Density, Elasticity, Porosity, Thermal conductivity and Latent heat, Magnetic.
Chemical	Chemical properties can be measured or observed only when matter undergoes a change to become an entirely different kind of matter.	Flammability, Heat of combustion, Chemical stability. Oxidation, Corrosion Resistance.
Electrical	Electrical properties are their ability to conduct electrical current.	Resistivity, Conductivity, Temperature co-efficient of Resistance, Thermo electricity,
Mechanical	The mechanical properties of a material reflect the relationship between its response to deformation from an applied load or force.	Toughness, Hardness, Brittleness, Malleability, Stiffness, Ductility, Elasticity…
Thermal	Thermal properties are those properties of material which is related to its conductivity of heat.	Specific heat, Heat capacity, Thermal Expansion, Thermal conductivity, Melting point.

XI_BME_CHAP06_2022 .indd 71 25-01-2023 15:06:01

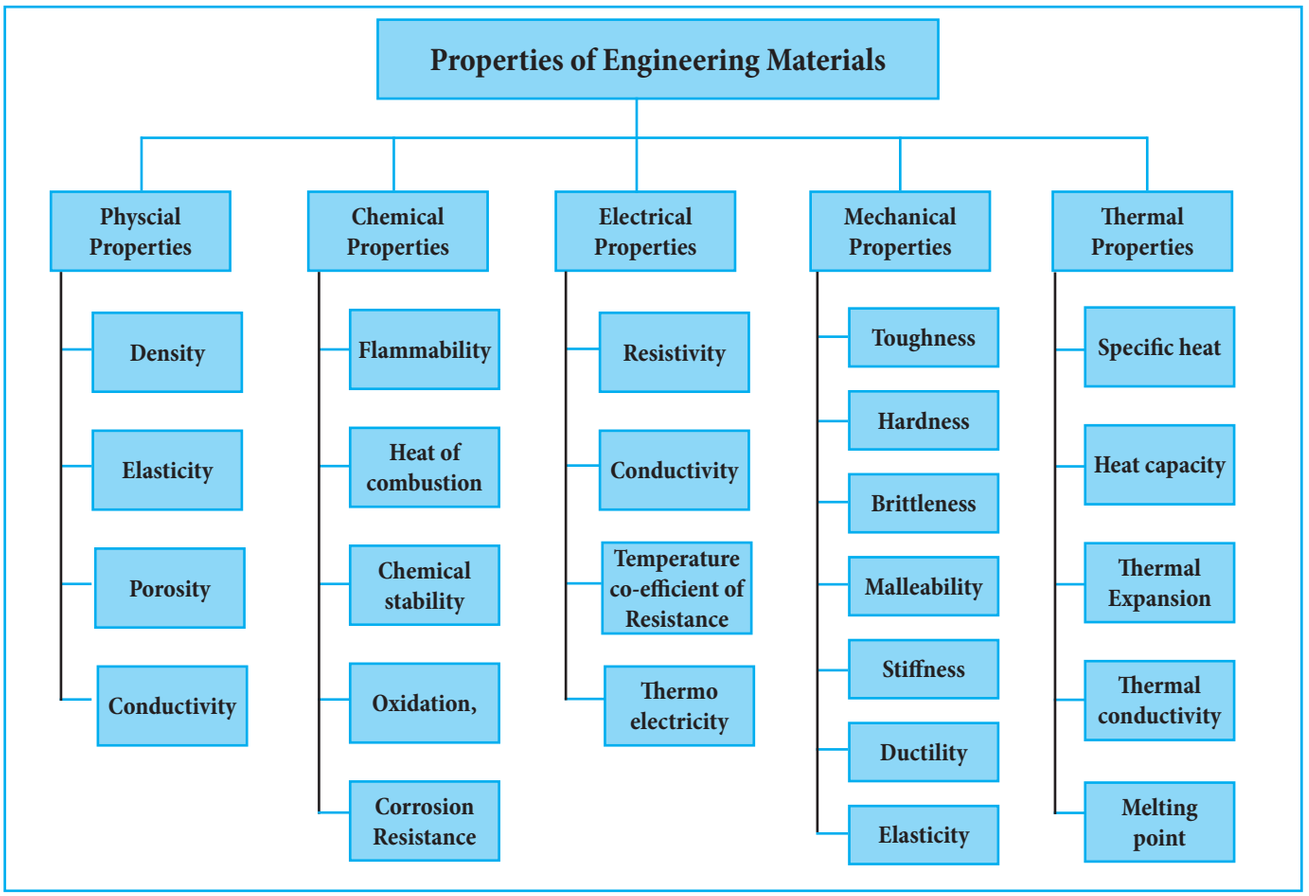

6.3.1. Mechanical Properties

Being an Engineer, we must have a thorough knowledge of mechanical properties of Engineering Materials, because they are of great importance in the design of tools, machines and structures. The most important and useful mechanical properties are briefly explained below.

Mechanical Properties	Description	Example
Toughness	Toughness is the ability of a material to withstand sudden external forces. It is the amount of energy absorbed by the material before it develops fracture.	Wrought Iron, Mild steel
Hardness	Hardness is a fundamental property which is the ability of a material to resist scratching, abrasion, and cutting.	High carbon steels, high speed steels. Diamond is the hardest material.
Brittleness	Brittleness of a material indicates that how easily it gets fractured when it is subjected to a force or load. The property of brittleness is associated with hardness.	Cast Iron

XI_BME_CHAP06_2022 .indd 72 25-01-2023 15:06:01

Mechanical Properties	Description	Example
Malleability	Malleability is a property of solid material which Indicates that how easily a material gets changed in shape under compressive force. Material can be formed into thin sheet by hammering (or) rolling.	Copper, Aluminium and silver
Ductility	Ductility is a property of solid materials which indicates that how easily a materials get changed in shape under tensile stress. Metals can be pulled into wire by using this property.	Copper, Aluminium, gold and silver.
Elasticity	This is the ability of a material to deform under load and regain to its original size and shape when the load is removed. Such a material is used to make springs.	Low Carbon Steel

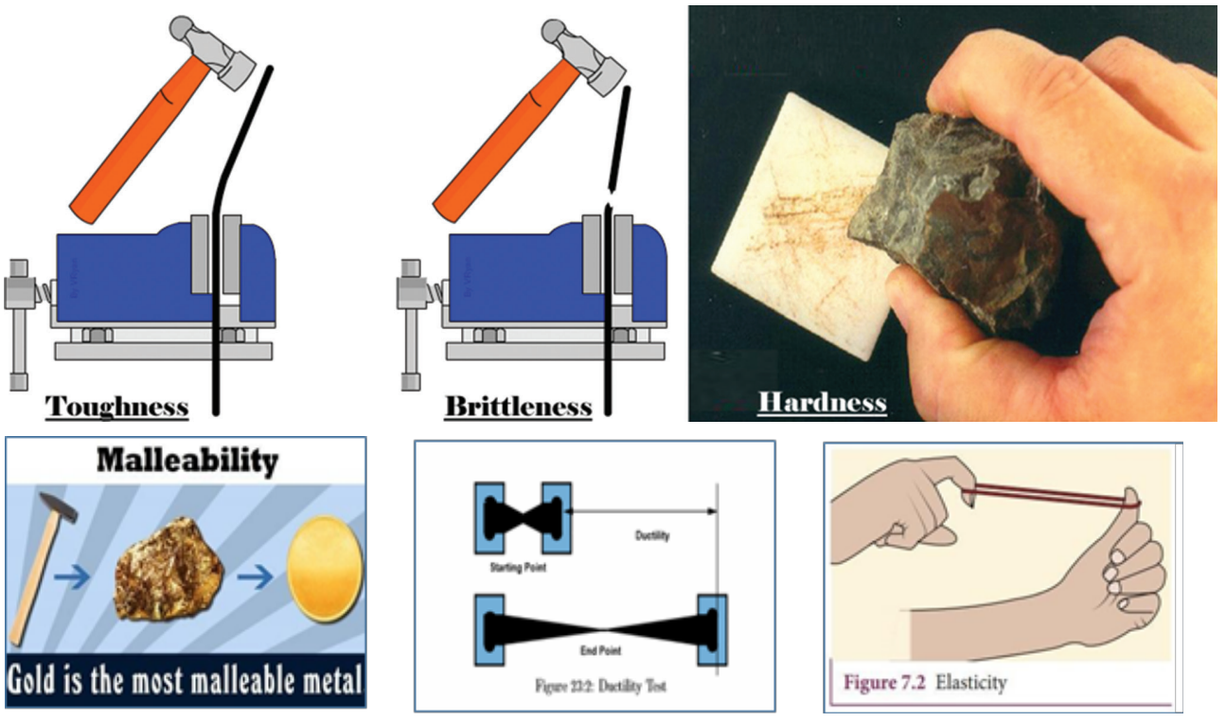

Figure 4 Toughness, Brittleness, Hardness

6.4 METALS

Metals are very useful in Industrial field. They are used to make tools because they can be strong and easy to shape. Bridges, buildings or ships are constructed by using Iron and Steel. Most metals are heavy and they melt only when they are heated at very high temperature. Heat and electricity can easily pass through metals. A lump of metals can be beaten into a thin sheet or can be pulled into thin wires. Most of the metals are solid at room temperature except mercury. Mercury is liquid at room temperature.

Metals are classified as ferrous and non-ferrous metals.

XI_BME_CHAP06_2022 .indd 73 25-01-2023 15:06:02

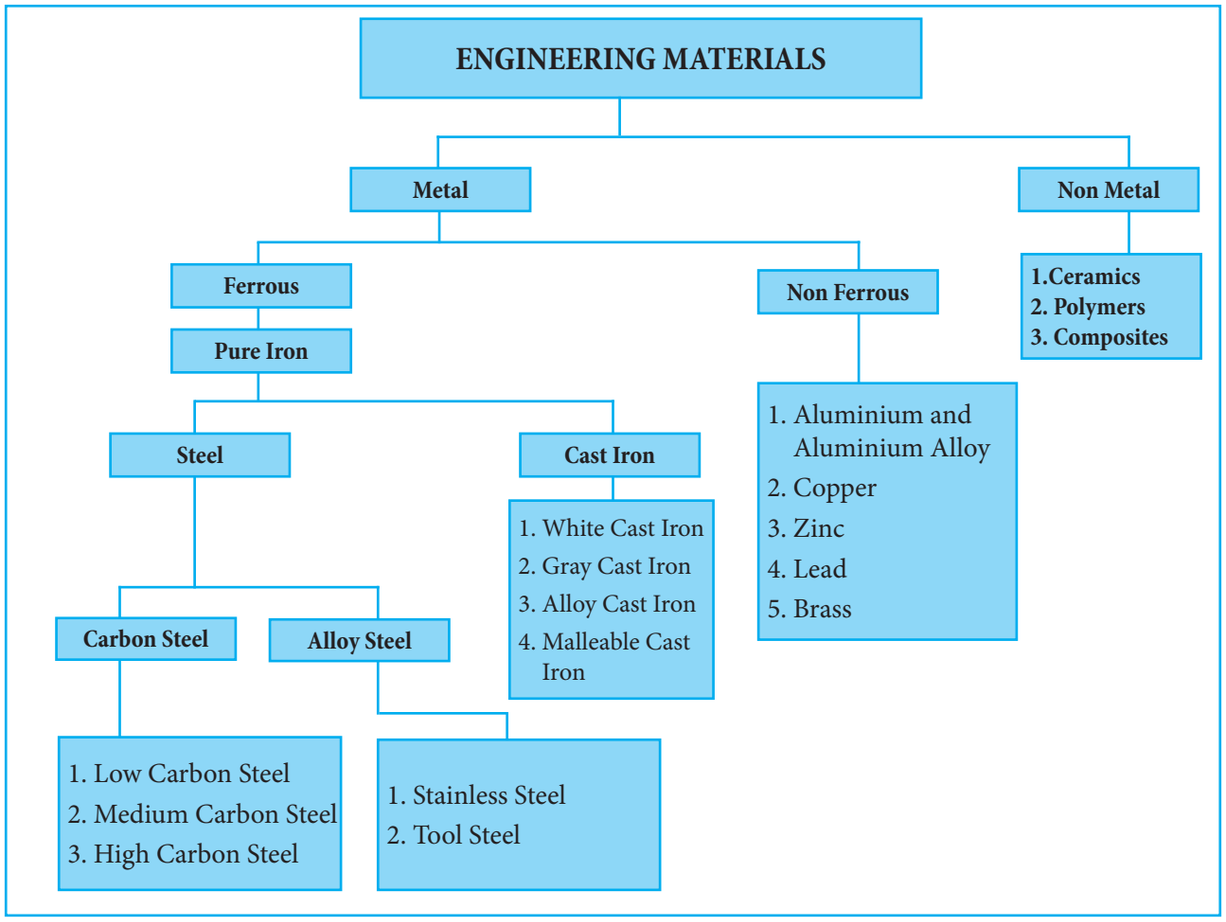

6.4.1. Ferrous Metals

Ferrous metals mostly contain Iron. They have small amounts of other metals or elements added, to give the required properties.

Pure Iron

Iron is a chemical element with symbols Fe and its atomic number is 26. It is an iron alloy with a very low carbon (0.1%) content. It is commercially known as pure Iron. It is relatively softer.

Types of ferrous metals

1. Steel
2. Cast Iron

Steel

Steel is an alloy of iron, carbon and other elements. It has carbon content range from 0.1% to 0.15%. Because of its high tensile strength and low cost, it is a major component used in buildings, infrastructure, tools, ships, automobiles, machines and weapons.

Steel can be broadly classified into two groups based on their chemical compositions:

1. Carbon Steel
   a. Low Carbon Steels
   b. Medium Carbon Steels
   c. High Carbon Steels

2. Alloy Steel
   a. Stainless Steel
   b. Tool Steel

Carbon Steel: Carbon steel or steel is a metal alloy. It is a combination of two metals. It is a combination of two elements like Iron and carbon. Other elements are present in small quantities. As carbon content rises the metal becomes harder and stronger but less

XI_BME_CHAP06_2022 .indd 74 25-01-2023 15:06:02

ductile and more difficult to weld. Carbon steels are further classified into three on the basis of percentage of carbon.

a) Low carbon steels or mild steels contain up to 0.3%of carbon.
b) Medium carbon steels contain 0.3% to 0.6% carbon.
c) High carbon steels contain 0.6% to 1.7% of carbon.

Alloy Steels: Alloy steels contain alloying elements (Example Manganese, silicon, nickel, titanium, copper, chromium and aluminum) in varying proportional in order to manipulate the steel's properties, such as its harden ability corrosion resistance, strength, weldability or ductility.

It is used for making pipes, spare part of vehicle, transformer, power generator and electrical motors.

a) **Stainless Steel:** The oxide film protects the surface of the steel from chemical reaction and rusted stains are not formed on the surface of the steel, hence it is called stainless steel. Stainless steel is generally contains 10-20% of chromium as the alloying elements. It is notable for its corrosion resistance, and it is widely used for food handling and cutlery devices.

b) **Tool Steel:** Tool steel contains tungsten, molybdenum, cobalt and vanadium in varying quantities to increase heat resistance and durability, making them ideal for cutting and drilling equipment.

Tungsten Steel: High speed Tungsten steel is high carbon tool steel, containing a large dose of tungsten; a typical HSS composition is 18% tungsten, 4% chromium, 1% vanadium, 0.7% carbon and the rest, Iron.

High speed Steel: High speed steel is a cutting tool material. The alloying elements are tungsten, molybdenum, vanadium and chromium. Tool made up of these materials are used in drilling, milling, turning, threading, boring, gear cutting and many other machining operations.

Cast Iron: Cast iron is a group of iron-carbon alloy with carbon content ranges from 2% to 4.5%. This high carbon content makes them excellent materials to use for casting.

Types of cast Iron

1. White Cast Iron
2. Gray Cast Iron
3. Alloy Cast Iron
4. Malleable Cast Iron

Important effects of major alloying elements in steel:

Elements	Percentage	Effects
Nickel	2.0 to 5.0 12.0 to 20.0	Toughens the steel. Corrosion resistance and increases the ductility.
Chromium	0.5 to 2.0 2.0 to 18.0	Increases hardenability, Corrosion resistance, heat resistance.
Molybdenum	0.2 to 5.0	Forms stable carbides. Helps formation of fine grains, eliminates the brittleness.
Vanadium	0.15	Improve the elasticity, strengthen the steel.
Tungsten	Upto 20	Helps retain hardness at high temperature

XI_BME_CHAP06_2022 .indd 75 25-01-2023 15:06:02

6.4.2. Non-Ferrous Metals

Non-ferrous metals do not contain Iron, we can also get non-ferrous metals as alloys. Eg, brass is an alloy of copper and Zinc. Non-ferrous metals are specified for structural applications because it has lesser weight, higher strength, higher melting points. They are also used for electronic applications. Some examples of Non-Ferrous metals are given below

S.No.	Non-Ferrous Metal	Description
1.	Aluminium	Ore : Bauxite Symbol : Al Atomic Number : 13 Melting Point : 658°C Uses : Sand casting
2.	Copper	Ore : Pyrites Symbol : Cu Atomic Number : 29 Melting Point : 1083°C Uses : Electrical wires and vessels
3.	Zinc	Ore : Sphalerite Symbol : Zn Atomic Number : 30 Melting Point : 419°C Uses : Coating material in iron and steel
4.	Lead	Ore : Galena Symbol : Pb Atomic Number : 82 Melting Point : 326°C Uses : Batteries, Pipes, Soldering electrode.
5.	Brass	Alloy : Copper and Zinc Symbol : - Atomic Number : - Melting Point : 930°C Uses : Locks, Gears, Bearings, Valves



Figure 5 Aluminium, Copper, Brass

XI_BME_CHAP06_2022 .indd 76 25-01-2023 15:06:02

6.5. HEAT TREATMENT

Heat treatment is a process in which a metal is heated to a certain temperature and cooled in a particular manner and speed to alter its internal structure for obtaining desired degree of physical and mechanical properties.

6.6 PURPOSE OF HEAT TREATMENT

1. Improvement in ductility
2. Relieving internal stresses
3. Refinement of grain size
4. Increasing hardness or tensile strength
5. Improvement in machinability
6. Alteration in magnetic properties
7. Improvement in toughness and development of re-crystallized structure.

6.7. LOWER AND HIGHER CRITICAL TEMPERATURE

While heating a solid metals, their internal structure starts to transform at a particular temperature. This temperature is known as Lower critical temperature of the metal. On further heating, the whole internal structure is transformed at particular temperature. This temperature is called upper critical temperature.

6.8 METHOD OF HEAT TREATMENT

1. Annealing
2. Normalising
3. Hardening
4. Tempering
5. Case Hardening
   a. Carburising
   b. Nitriding
   c. Cyaniding
   d. Flame Hardening

6.8.1. Annealing

Annealing is a process in which a metal is heated to a particular high temperature, held there for a period of several hours or several days, and allowed to cool slowly, by using sand, lime or ashes. This process is mainly applied to produce softening.

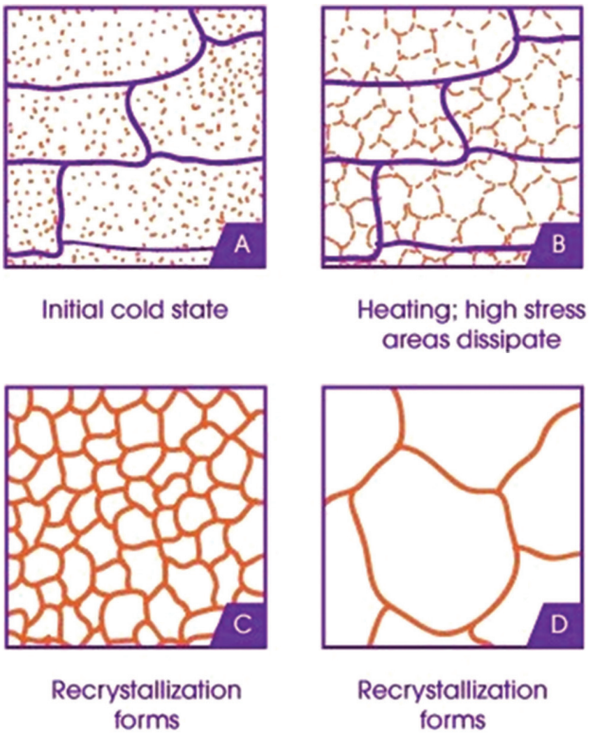

Figure 6 Annealing Process

Process of Annealing

1. In this process low carbon steel is heated to 30°C to 50°C above the higher critical temperature.
2. Maintain it in the same temperature for a considerable period of time.
3. Then the metal is slowly cooled by placing in to sand, ashes or lime that insures a slow rate of cooling.
4. Oil fired furnace, gas fired furnace or sintering (Electrical) furnace are used for heating.

The temperatures are monitored by thermocouple.

XI_BME_CHAP06_2022 .indd 77 25-01-2023 15:06:02

Purpose of Annealing

1. To soften the steel.
2. To improve machinability.
3. To increase ductility and toughness.
4. To relieve internal stresses.
5. To refine grain size.
6. To improve homogeneity

6.8. Normalising

Normalizing is a process in which a steel is heated above the critical temperature, holding for a period of time, and allowed to cool by air. The transformation of Internal structure are occurred during the cooling process.

After forging, rolling and casting, the steel parts are distorted in its structure. In this case, Normalizing is done to rectify the internal structure of the parts to its original position.

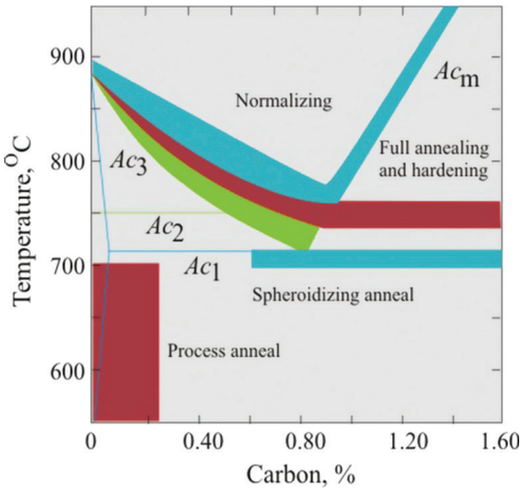

Figure 7 Normalising Chart

Process of Normalizing

1. In this process the steel is heat to 50°C above the higher critical temperature Holding it at that temperature for approximately 15 minutes
2. Cooling it in air

Purpose of Normalizing

1. To refine the grain size
2. To remove internal stresses
3. To improve machinability
4. To improve strength
5. For homogeneous structure

6.8.3. Hardening

This process makes the material stronger.

Process of Hardening

1. In the process of hardening, the steel is heated to the above critical temperature (from 750°C to 850°C)
2. Holding it at the temperature for a considerable period of the time and quenching it in water, oil or salt bath.
3. Hardness is depending on the following factors,
   a) Carbon content
   b) Rate of cooling
   c) Work size

Purpose of Hardening

1. To increase the hardness of the metal
2. To resist wear and enable it to cut other metals.
3. To improve strength, elasticity, toughness and ductility.

6.8.4. Tempering

Commonly used in steel making, tempering is a heat treatment used to improve hardness and toughness in steel as well as to reduce brittleness. The tempering process creates a more ductile and stable structure. If the steel (or) any tool is very hard it will brittle. So the tempering operation is done to reduce the brittleness.

XI_BME_CHAP06_2022 .indd 78 25-01-2023 15:06:02

Process of Tempering

1. The steel is heat at below lower critical temperature after hardening.
2. Holding it for a considerable time.
3. Then cooling it slowly.

Purpose of Tempering

1. To decrease the brittleness of hardened steel.
2. To achieve the best mechanical properties in metal
3. To stabilize the structure of metal.
4. To increase the toughness of steel.
5. To improve ductility.

6.8.5. Case Hardening

Case hardening is a process that is used to harden the outer surface of the metal while manufacturing a soft inner metal case. The case hardening process involves infusing addition carbon into the surface layer. In this process, chemical reaction made on the steel.

Purpose of case hardening

1. To provide adequate wear resistant on the surface.
2. To improve corrosion resistance
3. To improve heat resistance
4. To increase life of components made from low cost material.

Few processes of case hardening are

1. Carburizing
2. Nitriding
3. Cyaniding
4. Flame Hardening

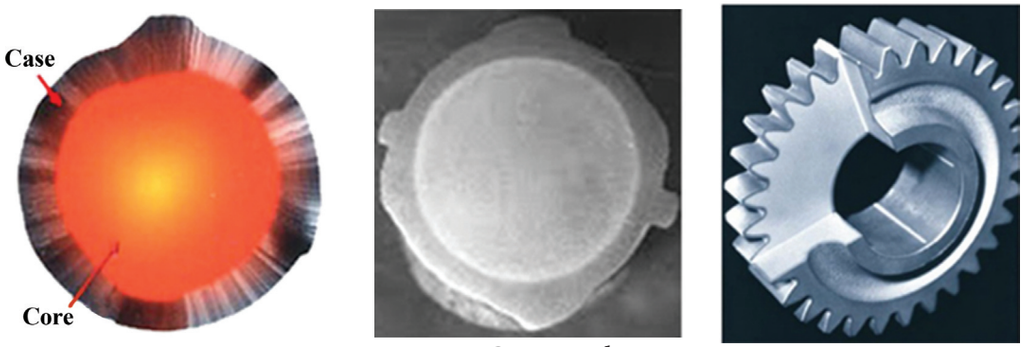

Figure 8 Case Hardening

Particulars	Carburizing	Nitriding	Cyaniding
Principle	Carbon is added to the surface	Nitrogen is added to the surface	Carbon and nitrogen are added to the surface
Surface Produced	Hard High carbon surface is produced on low carbon steel	Very hard nitride surface is produced on already hardened steel.	Carbon and nitride is produced on the surface of low carbon steel.
Temperature to be Maintained	900- 930°C	500- 575°C	800- 900°C
Quenching	Oil or Water	No Quenching required	Oil or water
Depth to be Hardened	0.1 - 0.25 mm	Upto 0.5 mm	Upto 0.4 mm
Application	Gears, Camshaft bearings	Crank pins, Shafts, Cutting tools	Screws, Nuts, Bolts, Gears, Cam etc.

XI_BME_CHAP06_2022 .indd 79 25-01-2023 15:06:02

6.9 QUENCHING

Quenching is sudden cooling process. It is done after the metal is heated. It is done with the water, oil or high pressure air.

The materials used for quenching are,

1. Sodium Solution
2. Cool Water
3. Salt Baths
4. Grade of Oil
5. Air

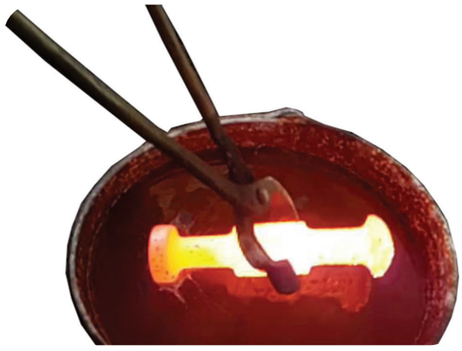

Figure 9 Quenching

6.10 HEAT TREATMENT FURNACES

Some common types of heat treatment furnaces are mentioned below

1. Sintering Furnace
2. Oil fired Furnace
3. Gas fired Furnace
4. Salt bath Furnace

SINTERING FURNACE

Sintering furnace is one of the electric furnace. heat is supplied by passing electricity in a coil and it has three zones, namely heating zone, soaking zone and cooling zone. Heat is controlled by thermostat and the temperature is measured by thermocouple. Component is placed in the tray which is passed through the furnace by means of iron belt conveyers.

The component is heated in the heating zone, then it is maintained at the sintering temperature in the soaking zone. Finally the component is cooled in the cooling zone. In this process, increasing and decreasing of the Iron belt conveyers is controlled by the controlling unit

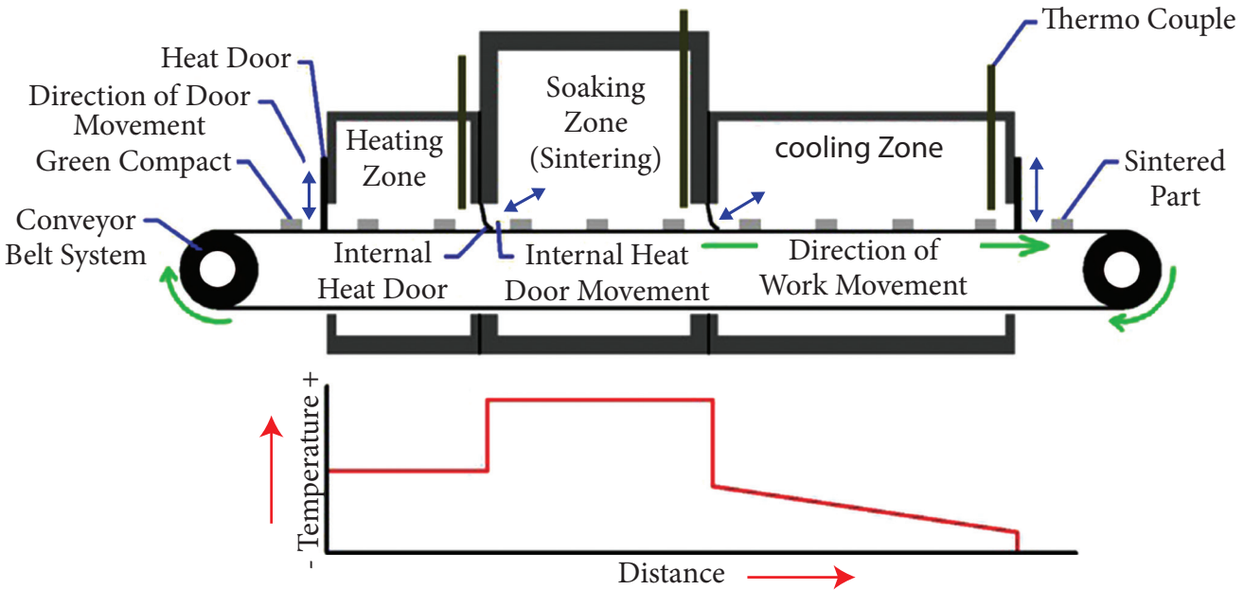

XI_BME_CHAP06_2022 .indd 80 25-01-2023 15:06:03

Glossary

1.	Brittleness	– சிதறும் தன்மை
2.	Malleability	– தகடாக நீளும் தன்மை
3.	Ductility	– கம்பியாக நீளும் தன்மை
4.	Elasticity	– மீள்தன்மை
5.	Galvanizing	– துத்தநாக முலாம் பூசுதல்
6.	Annealing	– மிருதுவாக்குதல்
7.	Hardening	– கடினப்படுத்துதல்
8.	Case Hardening	– புறக் கடினமாக்கல்
9.	Quenching	– விரைவாக குளிரச்செய்தல்
10	. Sintering Furnace	– மின்சார உலை

Activities

1. Collect small quantity of any Engineering Materials
2. List out the brittleness Materials.
3. Visit any one of the blacksmith workshops and submit the report. What are the various processes done there?

QUESTIONS

PART A

I. Choose the correct option :

1. corrosion resistance is

a. Physical property
b. Chemical property
c. Electrical property
d. Mechanical property

2. Elastic property is

a. Physical property
b. Mechanical property
c. Electrical property
d. Chemical property

3. _____ metal has brittleness property?

a. Steel b. Copper
c. Cast Iron d. Aluminium

4. _____ metal has elastic property?

a. Steel b. Cast Iron
c. Copper d. Low carbon steel

5. The atomic number of Pure Iron is

a. 16 b. 26
c. 6 d. 46

XI_BME_CHAP06_2022 .indd 81 25-01-2023 15:06:03

6. Which steel is used for making transformers?
   a. Carbon Steel b. Alloy Steel
   c. Tool Steel d. High Speed Steel

7. Which kind of steel is used to make milling tools?
   a. Carbon Steel
   b. Tool Steel
   c. Stainless Steel
   d. High Speed Steel

8. The Carbon content in Cast Iron is,
   a. 2% to 3% b. 2% to 4%
   c. 2% to 4.5% d. 2% to 5%

9. Which one is added to the surface of the steel while nitriding.
   a. Carton and Nitrogen
   b. Nitrogen
   c. Carbon
   d. Hydrogen

10. The Purpose of tempering is,
   a. To improve corrosion resistance
   b. To increase the hardness of the metal
   c. To decrease the brittleness
   d. To improve machinability

11. _____ is a method or case hardening
   a. Tempering b. Annealing
   c. Cyaniding d. Hardening

12. The temperature used for carburising is at/
   a. 900°c to 930°c
   b. 750°c to 850°c
   c. 80°c to 50°c above the higher critical temperature
   d. 500°c to 600°c

PART B

II. Answer the following questions in one or two sentences:

13. List out some Engineering properties.
14. List out some Electrical properties.
15. What are different types of Steel.
16. What are the three kinds of carbon Steel.
17. What is mean by Stainless Steel?
18. Define "Heat treatment".
19. What are the methods of heat treatment?
20. What is lower critical temperature and upper critical temperature?

PART C

III Answer the following questions in about a page.

21. What are the properties of engineering materials and write short notes any two of them?
22. Explain the different kinds of Tool Steel
23. Write any five points about the purpose of Heat treatment.

PART D

IV. Answer the following questions in detail:

24. What are the mechanical properties of engineering materials and explain any four?
25. Explain the neat sketch of sintering furnase.

XI_BME_CHAP06_2022 .indd 82 25-01-2023 15:06:03

CHAPTER

7

HAND TOOLS AND MEASURING TOOLS



LEARNING OBJECTIVES

1. To know about Hand Tools and its types and various instruments used in workshop
2. To know about the measuring instruments and gauges like scales, calipers and Gauges.
3. To know how to operate the measuring instruments and gauges and to know about their uses.

TABLE OF CONTENT

7.1. Introduction

7.2. Classifications of tools

7.3. Hand Tools

7.4. Measuring Tools

7.1 INTRODUCTION

- Tools are useful in assembling or dismantling machine parts or elements. Some other tools are used to measure dimensions, marking size and dimensions and cutting off undesired portions of materials. Different types of tools are used in fabricating various components of a machine tool. All these tools are known as "Hand Tools". Factories are producing desired products. The quality of the products depends upon its shape, size and surface finish. To measure these features, different types of measuring instruments are required. In this chapter, we discuss about some important hand tools and measuring instruments.

XI_BME_CHAP07_2022.indd 83 25-01-2023 15:09:00

7.2. CLASSIFICATIONS OF TOOLS

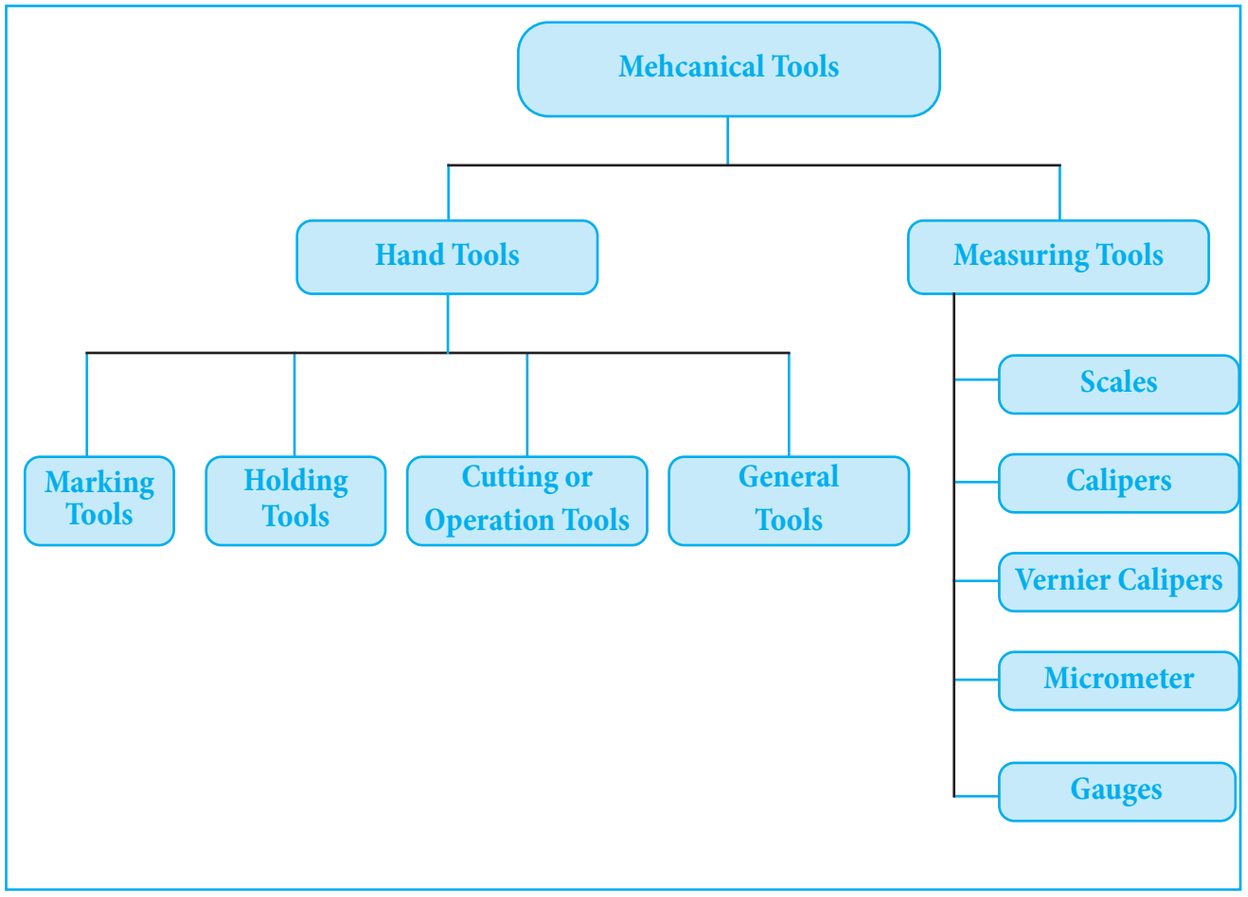

7.3. HAND TOOLS

A hand tool is any tool that is powered by hand rather than a motor. Hand tools have been used by humans since the Stone Age. At that time stones were used for hammering and cutting.

Let's discuss about some of basic classifications of hand tools shown in the above flow chart.

7.3.1. Marking Tools

In addition to the measuring instruments, some tools are used to make marking on the work pieces and to scribe lines on them. They are known as marking tools.

Scribing is a very important action in making a component. Lines are to be drawn on the work piece according to the design. These lines are drawn with reference the contours of the work preferably at right angles or with reference to a certain datum line. The position of these edges or the position of the datum line may be determined from the drawing which is necessary for each job.

Effects of Poor Marking

1. Waste of job material.
2. Wastage of time.
3. Leads to loss because of the production of inaccurate products.
4. Consequent transporting expenditure
5. Earning bad name in the industry.

XI_BME_CHAP07_2022.indd 84 25-01-2023 15:09:01

Guideline of Good Marking

1. Drawing should be correctly understood.
2. Marking tools should be kept ready.
3. Proper marking tools should be used.
4. Scribed lines are checked for correctness before punching.
5. Selection of punches should be done properly.

Types of Marking Tools

Important marking tools are given below

1. Steel Rule
2. Divider
3. Punches
4. Try Square
5. Scriber
6. Surface Plate
7. Marking Table
8. Surface Gauge
9. V – Block
10. Angle Plate

STEEL RULE



Figure 1 Steel Rule

Steel rule is used generally for measuring all kinds of objects. It is also adopted for making and scribing straight lines. It is made of thin steel sheet and hence named so.

DIVIDER

Divider has got two legs having sharpened ends. The two legs are connected at the top by a rivet or by a spring.

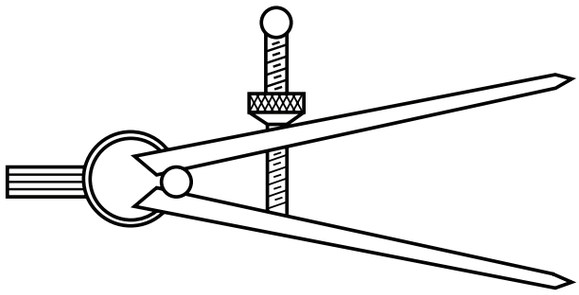

Uses of Divider

- To scribe arcs and parallel lines on work pieces.
- To divide straight lines and curved lines into equal parts.
- To find and check the center of a round rod.
- To mark correct dimensions taken from the steel rule on work pieces.

PUNCHES

Punches are used to make permanent marks on the lines already scribed on the work pieces. The punch marks make the line appear clearly. Punches are also used to make marks on exact locations on the work pieces where drilling is to be performed. Punches are made of steel alloys. The punching ends are grind to be a required angle.

Types of punches

1. Centre Punch
2. Dot Punch
3. Prick Punch
4. Bell Punch
5. Hollow Punch
6. Pin Punch

XI_BME_CHAP07_2022.indd 85 25-01-2023 15:09:01

S.No.	Type of Punch	Picture	Tip	Uses
1	Centre Punch		Angle of the tip is 90º	To mark location for drilling.
2	Dot Punch		Angle of the tip is 60º	To mark scribed lines appear clearly.
3	Prick Punch		Angle of the tip is 30º	Used on soft metals for precision works.
4	Bell Punch	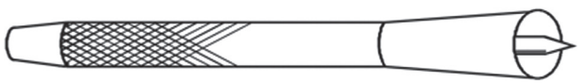	Bell shape at end with sharp tip	To mark Center on round rods.
5	Hollow Punch		Inside Concave tip	To make holes in sheet materials like leather, rubber and cardboard.
6	Pin Punch		Needle tip	To make small hole. To insert and remove pin in holes.

TRY SQUARE

Try square is used to check whether the angular surface of internal or external is 90°. It is also useful in scribing parallel lines perpendicular to a particular surface and to check flatness of surface. Try square consists of two parts namely stock and blade. Stock is made of cast iron or cast steel and blade is made of high carbon steel or stainless steel. All sides of the stock are machined accurately and perpendicular to the adjacent sides.

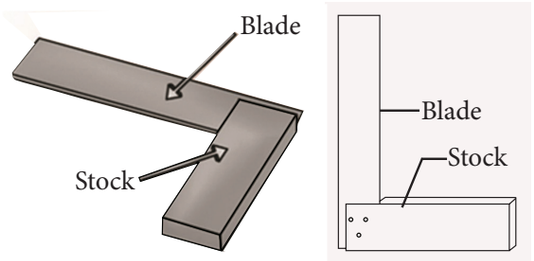

The blade is riveted to the stock such that both of them are absolutely per perpendicular (90°) to each other. There will be an undercut on the stock nearer to the bottom of the blade. The blade of the try square may be graduated.

The Try square should be maintained properly. The blade of the try square should not be used as a screw driver and stock as hammer. It should be oiled properly for avoiding rust formation on its surface.

SCRIBER

A scriber is used to scribe lines on the work pieces. It is made of high carbon steel, which is hardened and tempered. The end of the scriber is sharpened at an angle of 12° to 15°.

XI_BME_CHAP07_2022.indd 86 25-01-2023 15:09:01

The body of the scriber is knurled to provide gripness. It is available in different lengths 150mm, 200mm & 250mm.

There are different types of scribers available. They are,

1. Straight ended Scriber
2. Bent ended Scriber
3. Adjustable Scriber
4. Offset Scriber
5. Knife edge Scriber

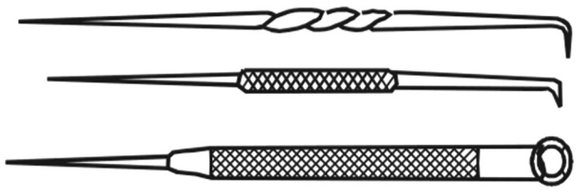

Figure 4 Types of Scribers

Maintenance of Scribers

1. The point of the scriber should be maintained straight and sharp.
2. Heavy materials should not be placed on it.
3. The scriber point should be kept in a cover which not in use.
4. Scriber should be used after cleaning of moulded area.

SURFACE PLATE

The flatness of a surface of a work can be tested with the help of a surface plate. It is also used for marking-out work. Surface plates are made of grey cast iron. The top surface of the surface plate is very accurately machined and scraped for further accuracy. It should be mounted on a bench or on a special stand at a height of about 800mm. They are made in two grades of accuracy "A" grade and "B" grade. A grade surface plates are with 0.005mm flatness and B grade with 0.2 mm flatness. It is available in sizes of 150 x 100 mm and 1000 x 750mm.



Figure 5 Surface Plate

Maintenance of Surface Plate

1. The surface plate should be covered when not in use.
2. The top surface should be kept free from rust and dirt.
3. It should be wiped with a clean cloth and smeared with grease or oil after use.
4. Parts having burrs on them should not be rubbed on the top surface of the plate

MARKING TABLE

Marking table accommodates surface plates to be mounted on it. It helps in marking and inspection. It is made of mild steel and the top is made of cast iron. It is available in sizes of 900 x 900 x 825mm.

SURFACE GAUGE

Surface gauge is also a marking tool. It can also be called as marking block. This instrument is used to scribe straight lines on work surfaces and it can also be used to check the correctness of surface level. In combination with a dial indicator, it is used to line up cutting tool or work pieces for inspection.

XI_BME_CHAP07_2022.indd 87 25-01-2023 15:09:01

The base of the surface gauge is accurately machined and a pillar stands vertically on it. A scriber is attached to the pillar by means of a clip. The scriber can be positioned practically in any position.

There are two types of surface gauges, namely

1. Standard or plain surface gauge
2. Universal surface gauge

STANDARD OR PLAIN SURFACE GAUGE: This is a simple form of surface gauge in which a pillar is filled into a heavy base vertically. A scriber is attached to the pillar by means of a clip. It is adjusted by means of a knurled nut. It is not suitable for precision work.

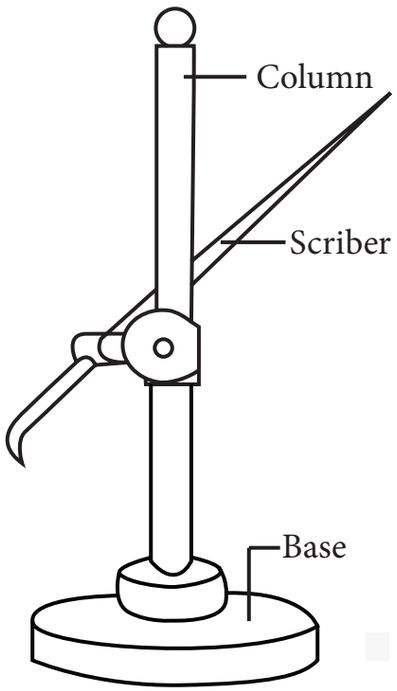

Figure 6 Standard Surface Gauge

Before setting the instrument for scribing and checking, the surface plate, the angle plate and the work are cleaned neatly for measuring purposes, the steel rule is selected. Angle plate is placed on the surface plate. The steel rule and the work are placed closely on one side of the angle plate. The tip of the scriber is set and adjusted by sliding the clip suitably. The required straight line will be drawn by moving the surface gauge along the work upon the surface plate.

UNIVERSAL SURFACE GAUGE: It has a base having 'V' groove, a spindle and a scriber. The scriber is adjusted by means of knurled nut. The advantage in comparison with pillar type is that fine adjustments can be made by means of an adjusting screw. Pins provided on the base can be pushed down to act as a guide against the top of the surface plate. 'V' groove on the base enable it to be placed on round rods.

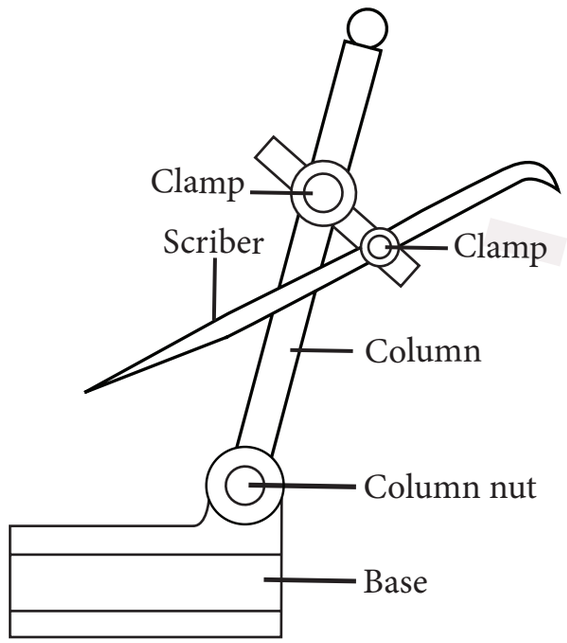

Figure 7 Universal Surface Gauge

Uses of Surface Gauges

1. To find centers of round rods and square rods in lathe.
2. To set work pieces aligned to the axis of the lathe while held by chucks.

XI_BME_CHAP07_2022.indd 88 25-01-2023 15:09:01

3. Can be used as a vernier height gauge to draw horizontal lines on work pieces.
4. To check parallelism of opposite sides on machined parts.
5. The scriber of the surface gauges is replaced by a dial indicator and used for Alignment of machine tools.

7.3.2. Holding Devices

A device that hold thing firmly are called holding devices. They hold the work-piece while doing operations on it.

Some common holding device are

1. Vice
2. V-Block
3. Angle Plate

VICE

Vice is generally used to hold work pieces when operations like drilling, chiselling and hacksaw cutting are performed to them. Vice is an essential tool in a workshop.

Types of Vice

There are several types of vices used according to the type of work to be performed, the shape, size of the work and the method of holding.

1. Bench vice
2. Hand vice
3. Leg vice
4. Pipe vice
5. Pin vice
6. Universal vice.

S.No.	Name	Picture	Mounted on	Use
1	Bench Vice		Bolted on Work Table (or) Bench	To Hold work-piece for work like filing, chiselling, hack saw operation
2	Hand Vice		can hold on hands	To Hold small objects like screw, rivets
3	Leg Vice		Either bolted on work bench or ground with support	used in blacksmith shop to hold workpiece for work like striking, chiselling, cutting

XI_BME_CHAP07_2022.indd 89 25-01-2023 15:09:02

4	Pipe Vice		Bolted on Work Table (or) Bench	To hold cylindrical objects for work
5	Pin Vice		can hold on hands	To hold small round objects like iron string, wire
6	Universal vice		Bolted on Work Table (or) Bench	To hold objects for work at any angle

V BLOCK

'V' block has a 'V' shaped groove and rectangle grooves on it. The angle of the 'V' groove is either 90° to 120°. The face of the 'V' block is square or rectangular in section. It is used to hold cylindrical work pieces when these work pieces are be machined in a drilling machine, shaping machine and milling machine. It is also used to hold round rods when some markings are to be done on it.

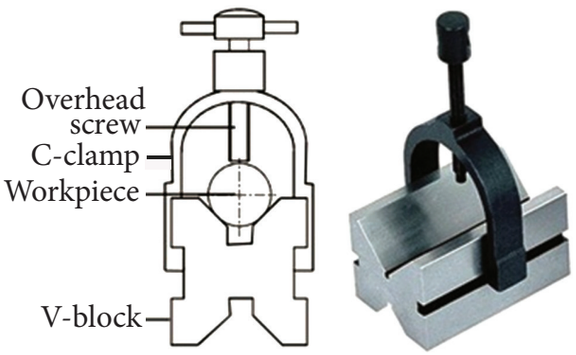

Figure 8 V-Block

The usual sizes of a 'V' block are 50mm to 250mm in length and 50mm to 100mm in width and height.

ANGLE PLATE

It resembles the English alphabet 'L'. It has got two sides absolutely perpendicular to each other. Usually it is made of cast iron. The sides of the angle plate have got slots and holes on it. It is used to hold work pieces on machine tools like lathe, drilling machine and milling machine. It is also used to check the perpendicular of the surface either internally or externally. It is also used for marking tools like surface gauge. It is specified by its length, width and height.

XI_BME_CHAP07_2022.indd 90 25-01-2023 15:09:02



Figure 9 Angle Plate

7.3.3. Cutting or Operating Tools

A cutting tool cutter is typically a hardened metal tool that is used to cut, shape, and remove material from a work piece by means of machining tools as well as abrasive tools by way of shear deformation.

Some commonly used cutting or operating tools are

1. File
2. Hacksaw
3. Scraper
4. Tap
5. Die

FILE

File is a hardened steel tool having slanted and parallel rows of cutting edges or teeth on its surface. It is used to cut, smooth or fit metal parts. It is also used on wooden and plastic parts. It cuts all materials expect hardened steel. Small quantities of unrequired metal can be removed with files.

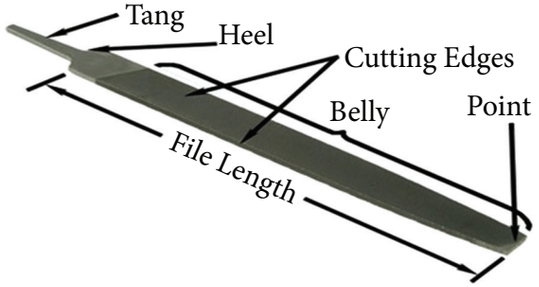

Figure 10 File

Metal burrs left out after chiseling and hacksaws cutting are removed with the help of files. It is also used to sharpen the cutting edges of sharp tools like saws. The tang is a pointed part which fits into the handle. The point is the end opposite to the tang. The heel is next to the tang. The face of the file has a slanting row of cutting edges. File is made of high carbon steel.

Files are classified according to the following factors.

1. Effective length
2. Sectional form
3. Cut of teeth
4. Grade

Size of the file

The length of the file is its size. It is measured from the point to the level excluding tang. Generally files are available in size ranging from 100mm to 200 mm. Files are also available from 200mm to 500mm for heavy duty work.

The shape of the file is its cross section. Files are made in different forms of a shape. Most common types of files are

1. Hand file
2. Flat file
3. Square file
4. Round file
5. Half round file
6. Triangular file
7. Knife edge file.

XI_BME_CHAP07_2022.indd 91 25-01-2023 15:09:03

S. No.	Type of File	Picture	Profile	Uses
1	Hand file		• Rectangular cross section • Uniform Width for length	Filing internal square edge.
2	Flat file		• Rectangular cross section • Tapered in width towards point	General Filing and speed work.
3	Square file		• Square cross section • Tapered in width towards point	Filing the square corners, enlarging squares openings.
4	Round file		• Circular cross section • Same diameter for 2/3 of length and tapered towards end.	Filing curved surface and enlarge the rounded holes
5	Half round file		• 1/3 of circular in cross section • Tapered towards end point	Filing curved surface.
6	Triangular file		• Triangular cross section with 60° inclination • Tapered towards end point	Filing "V" shaped grooves and corners
7	Knife edge file		• Tapered cross section • Looks like knife	Filing sharp corners and edge of keyways.

Maintenance of Files

During filing, the metallic burns coming out of the filed parts occupies the clearance spaces between the teeth. It prevents efficient cutting. These burns should be removed with brushes having thin metallic wires.

Grade

The grade of a file refers to the coarseness or the spacing between the rows of the teeth. It is designated by the number of rows of teeth per inch. These are five types of files according to its grade.

XI_BME_CHAP07_2022.indd 92 25-01-2023 15:09:03

They are,

1. Rough file (R)-20-25 teeth/inch
2. Bastard file (B)-25-30 teeth/inch
3. Second cut file (SC)-35-40 teeth/inch
4. Smooth file (S)-40-60 teeth/inch
5. Dead smooth file (DS)-80-100 teeth/inch.

HACK SAW FRAME

Hack saw frame consist of a frame, a wooden handle, prongs, tightening screw and a wing nut. It is used for sawing all metals except hardened steel. Tightening screw with the help of a wing nut is used to stretch the blade at required tension.

There are two types of hacksaw namely,

1. Standard or solid hacksaw frame
2. Adjustable hacksaw frame

Standard Hacksaw Frame: In this type, the distance between the prongs cannot be altered. So it is suitable for a particular length of hacksaw blades only.

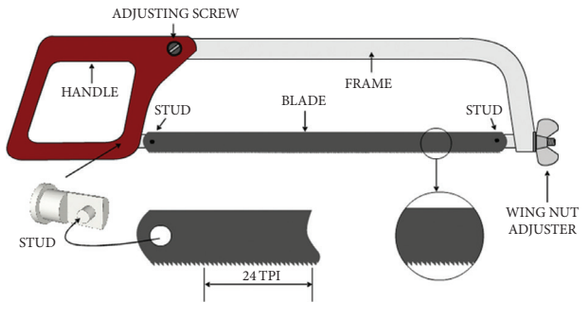

Figure 11 Standard Hacksaw

Adjustable Hacksaw Frame: In this type, the distance between the prongs can be adjusted to hold hacksaw blades of different lengths say from 200mm to 300mm.

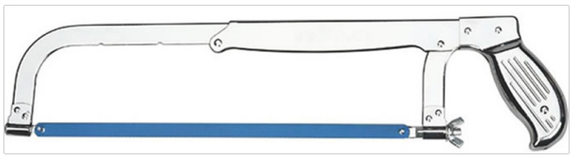

Figure 12 Adjustable Hacksaw

Hacksaw Blades

Hacksaw blades are made of high carbon steel, low alloy steel or high speed steel. They are then hardened and tempered. They are made as thin sheet with cutting edges present on one side or on both sides. The size of the blades is specified by the distance between the holes on either sides along the length.

According to the distance between two successive teeth on the blade (pitch), they are classified as coarse, medium and fine pitch blades. Soft materials like plastics are cut by coarse pitch blades. Medium pitch blades are employed to cut tool steel, hard light alloys, thick sections and tubes. Materials of small thickness are cut accurately by fine pitch blades.

Reason for the breakage of Hacksaw blades,

1. The cutting action may not be of uniform speed and thrust.
2. Improper fitting of blades (improper tightness or looseness)
3. Putting into use new blades on old cuts.
4. Not selecting blades of suitable pitch.
5. Poor workmanship

XI_BME_CHAP07_2022.indd 93 25-01-2023 15:09:03

Reason for the blunting of hacksaw blades.

1. The material being cut is harder than the blades.
2. Improper selection of blades.
3. Application of high thrust and speed.
4. Applying thrust during return stroke also
5. Not applying a coolant.

SCRAPER

Scrapers are used for sharing off or parting off thin slices or flakes of metal to make a fine smooth surface. The materials used for making scrapers is a good quality forged steel and the cutting edge is very hard. Scraping is a process of obtaining a true flat surface which is superior in quality than that can be produced by machining or filing. The top of the surface plate is coated with a thin film of Prussian blue. The surface to be scraped is laid on the surface plate and moved back and forth. The high spot on the work will be marked with Prussian blue. The high spots are scrapped down by giving the scraper a small circular motion.

There are three different types of scrapers according to its shape, they are;

1. Flat Scraper
2. Triangle Scraper
3. Half-round Scraper

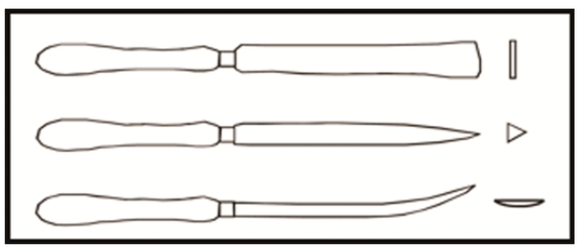

Figure 13 Types of Scraper

TAP

A tap is a screw like tool which has threads like a bolt and three or four flutes cut across the thread. It is used to cut threads on inside of a hole as in a nut. The tap is used along with the wrench which holds the tap with it. The cutting edges are formed by the flutes on the thread. The lower end of the tap is somewhat tapered so that it can dig into the walls of the hole. The top of the tap has a square shank which helps it to be held by the wrench. Taps are made of either high speed steel or high carbon steel and hardened and tempered.

Taps are made in sets of three:

1. Taper Tap
2. Second Tap
3. Parallel Tap

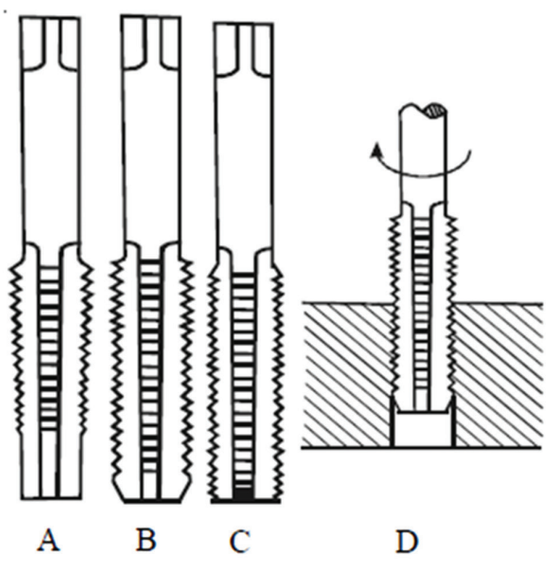



Figure 14 Type of Tap and working on Tap

XI_BME_CHAP07_2022.indd 94 25-01-2023 15:09:03

Taper Tap: The taper tap has about six threads tapered. It allows the tap to dig into the hole easily to form threads gradually as the tap is moved clockwise and anti-clockwise while tapping. Oil is applied into the hole while tapping.

Second Tap: It is tapered back from the edge about three or four threads. This is used after the taper tap has been used to cut the thread as far as possible.

Parallel Tap: It has threads for the whole of its length. It is used to finish the work prepared by the other two taps.

DIES

Dies are used to cut threads on a round bar of metal, such as threads on bolt. It is a round or square block of hardened carbon steel with a hole containing threads and flutes which form cutting edges.

There are mainly two types of dies in common use. They are,

1. Solid Die
2. Adjustable Die

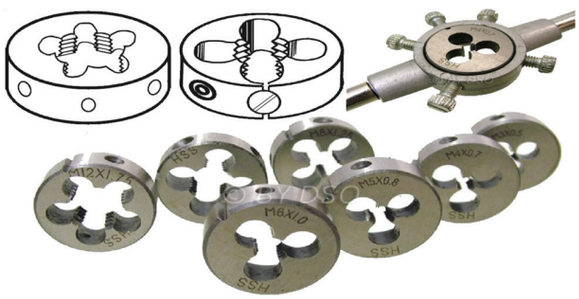

Figure 15 Die Set

Solid Die: A solid die is one which has fixed dimensions and cannot be adjusted for larger or smaller diameter. Adjustable means that it can be set to cut on larger or smaller diameter.

Adjustable Die: A circular adjustable split die shown in fig is very common. The die is split through one side and a slight adjustment is made by means of the set-screw. When screw is tightened up, the die is closed up slightly. while unscrewing the die will expand slightly. The size of the die is specified by the outer diameter of the thread to be made. The tools for holding and turning the threading die are called a die stock.

7.3.4. General Tools

Tools that commonly available in a workshop are given here as a general tools. Such common tools are

1. Hammers
2. Spanners
3. Screw Driver
4. Plier

HAMMER

Hammer is a hand tool that consists of a heavy piece of metal head fixed to a handle. This is used to drive nails into wood or shape metal with impact to a small area of an object.

There are three type of hammer commonly in used

1. Claw hammer
2. Ball Peen hammer
3. Club hammer

XI_BME_CHAP07_2022.indd 95 25-01-2023 15:09:03

S.No.	Types	Picture	Use
1	Claw Hammer		• In wood working and household repairs • The claw part used to undo nail form the fastened part.
2	Ball Peen Hammer		• For metal work • The rounded end is used to make curved shape in work-piece.
3	Club Hammer		• To drive stakes or cold chisels • To demolish masonry

SPANNER

Spanner is a hand tool used to tightening or loosening nuts and bolts. Most important and common types of spanners are as follow

1. Open end or single end spanner
2. Double ended spanner
3. Ring spanner
4. Socket spanner
5. Box spanner

S. No.	Types	Pictures
1.	Open Ended Spanner	
2.	Double Ended Spanner	
3.	Ring Spanner	
4.	Socket Spanner	
5.	Box Spanner	

SCREW DRIVER

Screw driver is a hand tool used for tightening or loosening screw to fasten things. Screw drivers are classified on the basis of tip.

XI_BME_CHAP07_2022.indd 96 25-01-2023 15:09:07

Some common types of screwdriver are

S.No.	Type	Picture
1.	Slot	
2.	Phillips	
3.	Trox	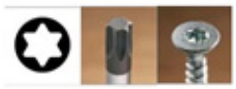
4.	Allen	

PLIERS

Pliers are hand tools used to hold objects firmly and it also used to cut wires. Most commonly used pliers are

S.No.	Types	Pictures
1.	Combination Plier	
2.	Nose Plier	

7.4. MEASURING TOOLS

Measuring tools are the devices used to measure the work piece whether it is in required shape and size. Let's discuss about some of basic measuring tool.

7.4.1. Scales

Scale is a one of the linear measuring instrument. Scales are used to measure the length, breadth and height of an object and to draw straight lines. It is made up of spring steel or stainless steel that is why it is called as 'Steel Rule'. These scales are used in engineering fields.

Type of Scales

1. Standard Scale
2. Flexible Scale
3. Narrow Scale
4. Hook Scale
5. Folding Scale
6. Tape Scale

Standard Scale: Standard Scale is available in maximum length of 150mm or 300mm in Metric system. It is also available in maximum length of 6 inches or 12 inches in British system. The standard scale measurements are accepted by the worldwide.



Figure 16 Standard Scale

Flexible Scale: This type of scale is flexible in nature because it is made up of narrow thin plate of spring steel. It is useful for taking measurements on irregular and cylindrical surface.

XI_BME_CHAP07_2022.indd 97 25-01-2023 15:09:07

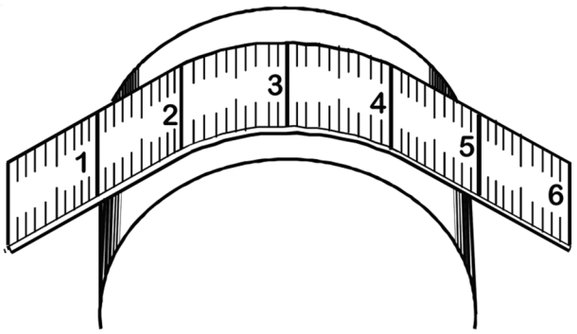

Figure 17 Flexible Scale

Narrow Scale: The width of the narrow scale is about ¼ inch. This is used to measure the depth of narrow hole.

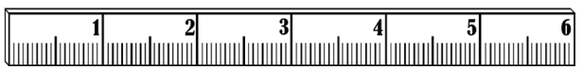

Figure 18 Narrow Scale

Measuring Tape: The tap is wound inside of a round closed case. It can be pulled out to the required length. The tap is made of steel plate or thick plastic cloth material. This is used to measure the play grounds and house flats.

Maintenance of Scales

1. Scales should not be used as wedge or Screw driver.
2. Heavy objects should not be placed on it.
3. Scales should not be used for rough surface.

7.4.2. Calipers

A caliper can be as simple as a compass with inward or outward facing points. Calipers are used to measure diameters of cylindrical objects, internal and external dimensions of square or rectangular objects. It does not show the measurements directly, but along with steel rule.

Types of Calipers

1. Outside Caliper
2. Inside Caliper
3. Jenny Caliper

Outside Caliper: Outside Caliper is used to measure external dimensions like length and breadth of various objects and diameters of round rods.

Inside Caliper: Inside caliper is used to measure the internal diameter of hole and length of grooving and undercutting of cylindrical jobs.

Jenny Caliper: Jenny caliper is used to find the center of facing side of round rod and to draw parallel lines on work pieces. One of the legs of this type of caliper is straight and other is bent.

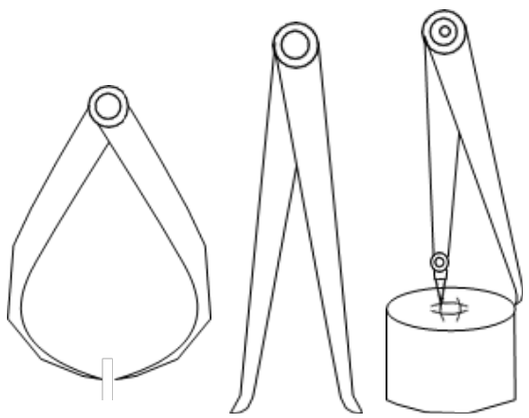

Figure 19 Outside Caliper

Figure 20 Inside Caliper

Figure 21 Jenny Caliper

The above caliper's legs are generally joined by either Rivet or spring.

Rivet Type: The two legs of this type of calipers are connected by rivets at the top. So these type of calipers are called as "RIVET TYPE CALIPERS".

Spring Type: The two legs of this type of caliper are connected by springs at

XI_BME_CHAP07_2022.indd 98 25-01-2023 15:09:08

the top. So these type of Calipers are called as "SPRING TYPE CALIPERS".

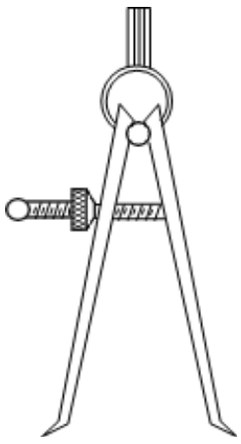

Figure 22 Spring Type inside Caliper

Maintenance of Calipers

1. It should not be used on hot and rotating parts.
2. Heavy objects should not be placed on it.
3. It should be kept on flat surfaces.

7.4.3. Vernier Caliper

Vernier Caliper is a precision measuring instrument. Vernier caliper was developed by French Mathematician Pierre Vernier in the year 1830 and the instrument is called after his name. Generally the least count of Vernier caliper is 0.02 mm in metric system and 0.01 inches in British System.

Vernier caliper is useful in measuring outer and inner diameter of hole and depth of holes. There are two important parts one is main scale and other is vernier scale. A fixed jaw is attached to main scale. Vernier Scale with movable jaw is slides over the main scale.

The outer diameter of object to be measured is held between the fixed jaw and movable jaw. The reading on both the main scale and the vernier scale are noted. Two separate nibs are provided on the top side, for measuring inner dimension of any jobs.

A narrow slot is provided on the backside for the main scale to accommodate a narrow plate. This plate is made to move along with the vernier scale to measure depth of holes and slots.

Least count: The smallest value that can be measured by the measuring instrument is called least count.

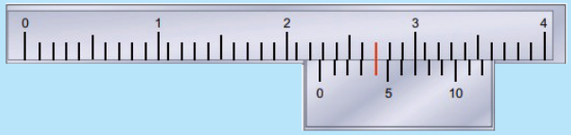

Figure 24 Vernier Caliper Reading

Vernier Caliper Reading

= Main scale Reading +
(0.02 × Vernier Scale coincidence)
= 22 + (0.02x4)
= 22 +0.08

Vernier Caliper Reading = 22.08mm

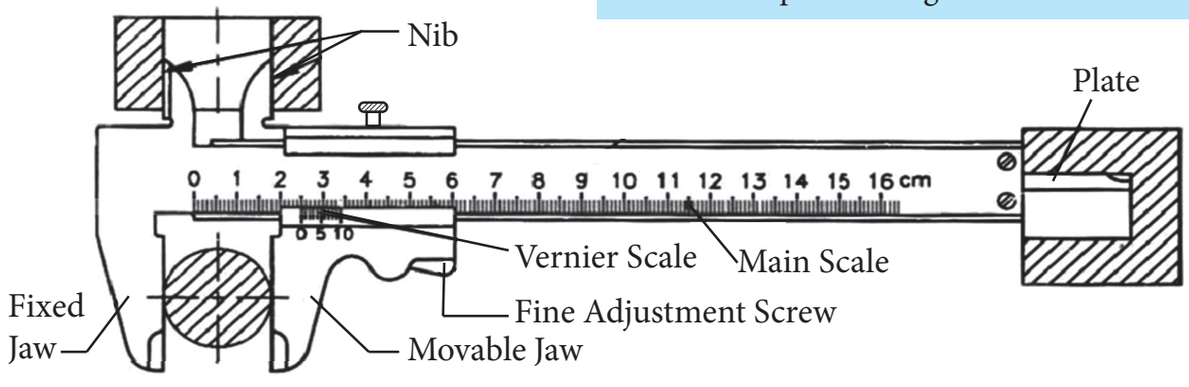

Figure 23 Vernier Caliper

XI_BME_CHAP07_2022.indd 99 25-01-2023 15:09:08

Finding the Least Count of Vernier Caliper

Formula

Least Count of
vernier Caliper = 1 M.S.D – 1 V.S.D

(MSD – Main Scale Division, VSD – Vernier Scale Division.)

Problem

The main Scale of Vernier Caliper is marked in Millimeters. 49 divisions of main scale are divided as 50 divisions in Vernier Scale. What is the least Count of that Vernier Caliper?

Value of one division
in Main Scale $= 1mm$

Value of one division
in Vernier Scale $= \frac{49}{50}\text{mm}$

Formula

$$\text{Least Count} = 1\,MSD - 1\,VSD$$

$$= 1 - \frac{49}{50}$$

$$= \frac{50 - 49}{50}$$

$$= \frac{1}{50}$$

Least Count of
Vernier Caliper = 0.02 *mm*

VERNIER HEIGHT GAUGE

Vernier Height Gauge is used to find the height of an object and to draw lines to desired heights accurately. Measurements can be done to an accuracy of 0.02 mm and 0.01 inch.

The base of Vernier height gauge is made up of steel. It is machined accurately.

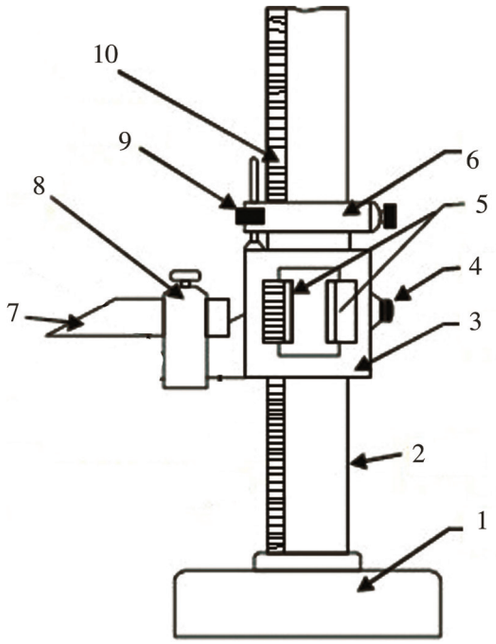

Figure 25 Vertical Height Gauge

1. Base
2. Column
3. Slide
4. Slide Clamp
5. Vernier Scale
6. Fine Adjustment Clamp
7. Scriber
8. Sciber Holder
9. Fine Adjustment Screw
10. Main Scale

A Graduated main scale is mounted vertically on the base. A movable Vernier scale is fixed on main scale and slider over the main scale up and down. A scriber is fitted to Vernier scale. A clamping screw is fitted on Vernier scale to lock the Vernier scale at the required height.

There is a fine adjusting slide fitted on the Vernier scale with a screw which is useful in adjusting the Vernier scale accurately. Measurements are made by placing the Vernier height gauge on the surface plate.

XI_BME_CHAP07_2022.indd 100 25-01-2023 15:09:09

Opposite to this, objects may be placed in Angle plate.

7.4.4. Micrometer

The Micrometer is an extremely precise measuring instrument. It is used to measure length, width and thickness of small and medium sized objects and diameter of wires and small rods, to an accuracy of 0.01mm in metric scale and 0.001 inches in British scale. An instrument used measure outside dimensions of objects this micrometer is also called as outside micrometer.

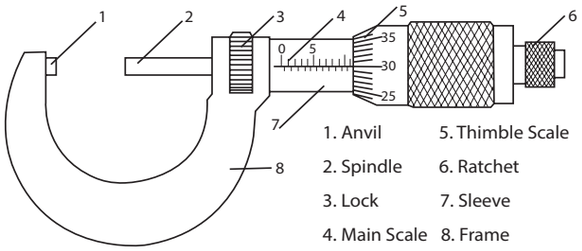

Figure 26 Micrometer

The frame is 'U' Shaped and it is made up of steel. The hardened Anvil is attached to left end of the frame. A graduated barrel having internal thread is called as 'sleeve'. It is attached to the right end of 'U' frame. It is the "Main Scale".

The spindle is attached to the thimble and the rotation of thimble will make the spindle to move forward or backward. The beveled edge of the thimble is graduated and called as thimble scale. A ratchet stop is attached to thimble. It gives Click sound when we give more pressure to rotate thimble. We stop the rotational movement of thimble, when we hear click sound.

Least Count of Metric Micrometer

When we rotate the thimble to one rotation, the distance moved by the spindle is called 'pitch' of the micrometer. Thimble scale is having 50 divisions itself. When we rotate the thimble to one rotation, the spindle moves 0.5mm.

Formula

$$\text{Least Count of metric Micrometer} = \frac{\text{pitch}}{\text{Total no of thimble Divisions}}$$

$$= \frac{0.5}{50} = \frac{5}{500} = \frac{1}{100}$$

Least Count of metric Micrometer $= 0.01\ mm$

Least Count of British Micrometer

In British micrometer, main scale (Sleeve) is having 40 threads in one inch. When we rotate thimble to one rotation, spindle moves to 1/40 inch. Thimble scale is having 25 divisions itself.

$$\text{Least Count of metric Micrometer} = \frac{\text{pitch}}{\text{Total no of thimble Divisions}}$$

$$= \left(\frac{1/40}{25}\right)$$

$$= \frac{1}{40} \text{X} \frac{1}{25}$$

$$= \frac{1}{1000}$$

Least count of British Micrometer = 0.001 *inch*

Errors in Micrometer

There are two types of Error

1. Positive Error
2. Negative Error

XI_BME_CHAP07_2022.indd 101 25-01-2023 15:09:10

Positive Error

When the micrometer is closed if the zero of the thimble is not touch the zero of sleeve, the error is said to be positive. The number of thimble divisions between the zero of thimble and zero of sleeve is the positive error should be subtracted from the original reading of micrometer

Problem

When we measure an object, the micrometer shows 15.12 mm. The positive error of the micrometer so 0.03 mm .What is the correct dimension of the object?

Micrometer Reading	=	15.12 mm
Positive Error Reading	=	(–) 0.03 mm
Correct Dimension of Object		15.09 mm

Negative Error

When the micrometer is closed if the zero of the thimble is crossed over the zero of sleeve, the error is said to be negative. The number of thimble divisions between the zero of thimble divisions and zero of sleeve is the amount of negative error. The amount of negative error should be added to the original reading of micrometer.

Problem

When we measure an object the micrometer shows 9.14 mm. The negative error of the micrometer is 0.04 mm. what is the correct dimension of the object.

Micrometer Reading	=	9.14 mm
Negative error Reading	= (+)	0.04 mm
Correct dimension of object	=	9.18 mm

Correcting the Error in Micrometer

Small C- Shape spanner is given with every micrometer. If there is error (Positive or negative) in micrometer, C- spanner is inserted in a small hole found in sleeve then tight or lose it to correct reading.

Difference between a Vernier Caliper and a Micrometer

S.No.	Vernier Caliper	Micrometer
1	External, Internal and depth measurements of an object can be done with a single instrument is called vernier caliper.	External, Internal and depth measurements can be measured with different type micrometers such as outside micrometer, Inside micrometer and depth micrometer.
2	Generally the least count of varnier caliper in Metric system is 0.02 mm and in British system is 0.01 inch.	Generally the least count of micrometer in metric system is 0.01 mm and in British system is 0.001 inch.
3	For measuring metric and British system, the mm and inch measures are marked in top and bottom side of main scale in a vernier caliper. So one vernier Caliper is enough to measure both system.	For measuring metric system (mm) metric micrometer is needed for measuring British system (inch), inch micrometer is needed
4	The measuring range is more (300 mm, 450 mm, 600mm, 1200 mm)	The measuring range is less (0.25 mm, 26-50 mm, 51-75 mm)
5	The movement of spindle is controlled by Ratchet so it is more accurate.	The touch feelings of fixed and movable jaws in the vernier caliper are somewhat difficult to feel. So accuracy may vary slightly.

XI_BME_CHAP07_2022.indd 102 25-01-2023 15:09:10

Method of Measuring in Micrometer

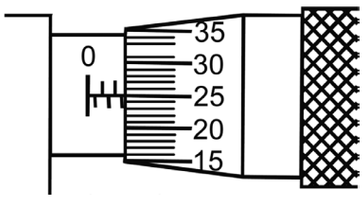

Figure 27 Method of Measuring in Micometer

Micro meter Reading

= Main Scale reading
+ (0.01 X Thimble Scale Coincidence)
= 2.50 + (0.01 X 25)
= 2.50 + 0.25

Micro meter Reading = 2.75 mm

7.4.5 Gauges

Gauges are the instruments which are ready made with required size and shape. We use this gauge instantly to find out the Size and shape. There is no graduated part in the gauges. They are made up of alloy steel and heat treated and fine finishing done by grinding process.

Advantage of Gauges

1. The measurements are checked quickly and easily.
2. The cost of gauges is less when compared with precision measuring instruments.
3. A semi-skilled operator easily can handle gauges.
4. No Supervision is required.
5. The production is increased.

Grade of Gauges

Gauges are made up of alloy steel. They are hardened and tempered and made in following three different grades

1. Workshop Gauge
2. Inspection Gauge
3. Master Gauge

Workshop Gauge: This grade of gauges are used in workshops to check the products manufacture in the shop with low accuracy. The accuracy of workshop gauge is 0.001 inch or 0.025 mm.

Inspection Gauge: Inspection Ganges are designed to be handled by skilled operators for inspection purpose. It is made with an accuracy of 0.0001 inch or 0.0025 mm.

Master Gauge: Master gauge are useful for checking the workshop gauges and inspection gauges. It is also used to check very accurate tools and is made with an accuracy of 0.00001 inch or 0.00025mm

TYPE OF GAUGES

Gauges are classified according to accuracy, shape and the elements to be checked.

Some of them are mentioned below

1. Slip Gauge
2. Radius Gauge
3. Depth Gauge
4. Limit Gauge
   a. Plug Gauge
   b. Ring Gauge
   c. Snap Gauge
5. Plate and Wire Gauge
6. Feeler Gauge
7. Telescopic Gauge
8. Template Gauge

Radius Gauge: The function of radius gauge is to check the radii of curvature of convex and concave surfaces.

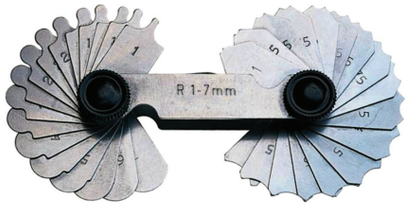

Figure 28 Radius Gauge

XI_BME_CHAP07_2022.indd 103 25-01-2023 15:09:10

Plate and Wire Gauge: The thickness of sheet metal is checked by means of plate gauge and wire diameters by means of wire gauges. The plate gauge is used to check the thickness of plate from 0.23 to 3 mm and the wire gauge is used to check the wire diameter from 0.1 to 10 mm.

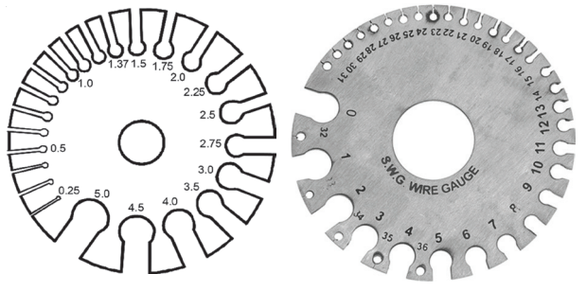

Figure 29 Plate and Wire Gauge0

Feeler Gauge: Feeler gauge is useful in checking small gaps between mating surfaces. They are made as precision machined blades with different thickness. The thickness ranges from 0.03 mm to 1.0 mm. All the blades are placed in a holder and have indications of their thickness marked on them.

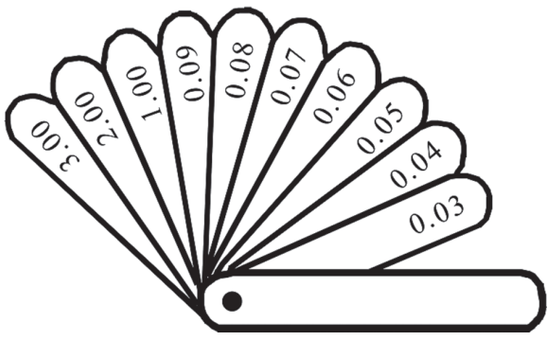

Figure 30 Feeler Gauge

Template: Template is made of steel. If objects are produced in mass, the model of the object with same shape and size is called Template. We measure the completed objects, quickly with template is similar to the gauge.

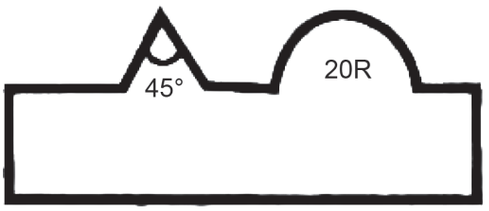

Figure 31 Example of Template

Glossary

1.	Assembling	ஒன்று சேர்த்தல்
2.	Dismantling	பிரித்தல்
3.	Vice	பிடிப்பான்
4.	Jaw	தாடை
5.	Taper	சரிவு
6.	Adjacent	அருத்துள்ள
7.	Diagonal	மூலை விட்டம்
8.	Edge	முனை
9.	Scraper	சுரண்டி
10.	Contour	மேடு பள்ளமான (அ) கரடுமுரடான
11.	Scribing	கீறி கோடிடுதல்
12.	Precision	துல்லியமான
13.	Burr	பிசிறு
14.	Gauge	அளவி
16.	Ratchet	ஒரு வழித்தடை பற்சக்கரம்

XI_BME_CHAP07_2022.indd 104 25-01-2023 15:09:10

Activities

1. Find and list out Latest hand tools using in Industrial field.
2. Make a punch (or) Scriber.
3. Find and list out Latest measuring tools used in Industrial field.
4. Make a plate gauge (or) Template by using plastic or thick card board.
5. Find and list out different types of gauges

QUESTIONS

QJ0ZN

PART A

I. Choose the correct option :

1. The vice with 'V' shaped jaws is
   a. Leg vice
   b. Hand vice
   c. Pipe vice
   d. Pin vice

2. Curved surfaces can be filed with a
   a. Flat file
   b. Square file
   c. Triangular file
   d. Half round file

3. The file used for filing v-shaped groove is
   a. Square file
   b. Triangular file
   c. Half round file
   d. Flat file

4. Grade of a file with 40 to 60 teeth per inch
   a. Rough file
   b. Second cut file
   c. Smooth file
   d. Dead smooth file

5. The Tool used to hold and cut wire is a
   a. Screw driver
   b. Pliers
   c. Spanner
   d. Hammer

6. Centre of face of a round rod can be found with a
   a. Outside caliper
   b. Jenny Caliper
   c. Inside Caliper
   d. Divider

7. Punch with an angle of 30° is known as
   a. Centre punch
   b. Dot Punch
   c. Pin Punch
   d. Prick Punch

8. The tool used for finding centre of a round rod in a lathe is
   a. Marking table
   b. Universal surface gauge
   c. V-Block
   d. Angle plate

XI_BME_CHAP07_2022.indd 105 25-01-2023 15:09:10

9. The least count of a vernier caliper is
   a. 0.01 mm
   b. 0.02 mm
   c. 0.001 mm
   d. 0.1 mm

10. Anvil and thimble are found in this measuring instrument
   a. Vernier Caliper
   b. Vernier Height Gauge
   c. Micrometer
   d. Radius Gauge

PART B

II. Answer the following questions in one or two sentences:

11. What is vice?
12. Write the types file as per grade.
13. What is a tap?
14. What is a centre punch?
15. What is an angle plate?
16. List out any three types of scales?
17. How do you measure the depth of a hole using vernier caliper?
18. What is positive error of a micrometer?
19. What is negative error of a micrometer?
20. What are the grades of gauges?

PART C

III Answer the following questions in about a page?

21. A main scale of vernier caliper is marked in millimeter. The Vernier Scale has 50 divisions which is equal to 49 divisions in the main scale. What is the least count of that vernier caliper ?
22. In metric micrometer, if the thimble rotates one rotation, spindle moves 0.5 millimeter. The thimble has 50 divisions totally. What is the least count of metric micrometer?
23. What are the advantages of gauges?
24. What are the various type of gauges?
25. What are the reasons for the breakage and blunting of hacksaw blade?
26. Expalin the process of tapping with diagram.
27. Explain the construction of try square with diagram.
28. Explain an ordinary surface gauge with a diagram.

PART D

IV. Answer the following questions in detail:

29. Describe about vernier height gauge?
30. Draw the Vernier Caliper and explain about it.
31. Explain about the outside micrometer with figure.
32. What are the difference between vernier caliper and micrometer?
33. Explain the types of files with suitable diagram.

XI_BME_CHAP07_2022.indd 106 25-01-2023 15:09:10

CHAPTER

8

FASTENERS

LEARNING OBJECTIVES

1. To know about the fasteners like bolts, nuts, washers, screws.
2. To know about threads, types and its uses.
3. To know about the nomenclature of thread.
4. To know about the key, key ways and its uses.

TABLE OF CONTENT

8.1. Introduction
8.2. Types Of Fasteners
8.3. Bolts
8.4. Nuts
8.5. Thread
8.6. Washers
8.7. Keys And Keyways

8.1 INTRODUCTION

- Fastener may be defined as a machine element used for holding or joining two or more parts of a machine or a structure. This process of joining the parts is known as fastening.
- Machines, vehicles, playthings are made by joining some spare part together.
- Bolt and Nut, screws, rivet, cotters, key and keyways, couplings, welding and soldering are methods which are used to assemble many machines and others

8.2. TYPES OF FASTENERS

The fasteners are classified into two types depends upon whether the assembled parts can be dismantled or not.

1. Temporary Fasteners
2. Permanent Fasteners

XI_BME_CHAP08_2022.indd 107 5/2/2022 5:38:40 PM

8.2.1. Temporary Fasteners

The temporary fasteners are fasteners that can be dismantled from connecting parts without damaging the parts.

Ex.: Screws, bolts, nuts, studs, keys and couplings

8.2.2. Permanent Fasteners

The permanent fasteners are fasteners that cannot be dismantled from connecting parts without damaging the parts.

Ex.: Welded, riveted joints and soldered joints.

8.2.3. Difference between Temporary Fasteners and Permanent Fasteners

Temporary Fasteners	Permanent Fasteners
Parts can be disassembled without damaging.	Cannot be disassembled, parts will be damaged
Parts which are worn can be replaced	Cannot be replaced
Assembling and disassembling are easy	Assembling and disassembling are very tough
Strength of this fastening is limited	Strength of this fastening is very strong
Less cost	More cost

8.3. BOLTS

Bolt is a metal shaft with external thread that is used to fasten two different parts together.

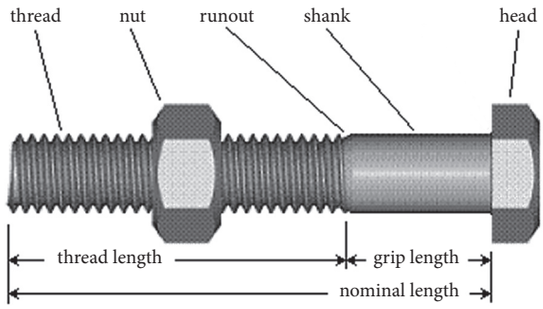

Figure 1 Bolt

8.3.1. Bolt Nomenclature

A bolt consists of two parts known as a shank and a head.

Shank: It is a thread-less part of the bolt between the head and thread. It increase the shearing capacity of the bolt.

Thread: It is a helical groove cut on the cylinder surface of the bolt.

Head: It is the part to hold the bolt and to fit the corresponding tightening tools. The shape of the bolt head is used depending upon the purpose for which the bolt is used.

8.3.2. Types of Bolts

Some important types of bolts are

1. Through Bolt
2. Tap Bolt
3. Stud Bolt

Through Bolt: Through bolts are used to connect two parts which have unthreaded holes on them. The bolt is inserted in to the hole and the other end is tightened with a nut

XI_BME_CHAP08_2022.indd 108 5/2/2022 5:38:40 PM



Figure 2 Through Bolt

Tap Bolt: A tap bolt differs from an ordinary bolt. The two parts to be connected, one is threaded hole and another one is plain hole. The bolt is screwed into a threaded hole without the nut, while it passes freely through a plain hole on the upper part.



Figure 3 Tap Bolt

Stud Bolt: Bolts that do not have a head is called as stud bolt. The center of the bolt may have a collar or square section. The stud is threaded at both ends. One end of the stud is screwed into a tapped hole of the parts to be fastened, while the other end receives a nut on it. It is used to cover the engine and pump cylinders, valves etc.



Figure 4 Stud Bolt

8.4. NUTS

An element used with a bolt or a stud to join two or more parts together temporarily is known as a nut. It has a threaded through hole to accommodate the bolt or stud.



Figure 5 Nuts

8.4.1. Types of Nuts

Some important types of nuts are

1. Square Nut
2. Hexagonal Nut

8.5. THREAD

Thread is a helical groove cut on the outer or inner of the cylindrical surface of the bolt.

8.5.1. Nomenclature of Thread

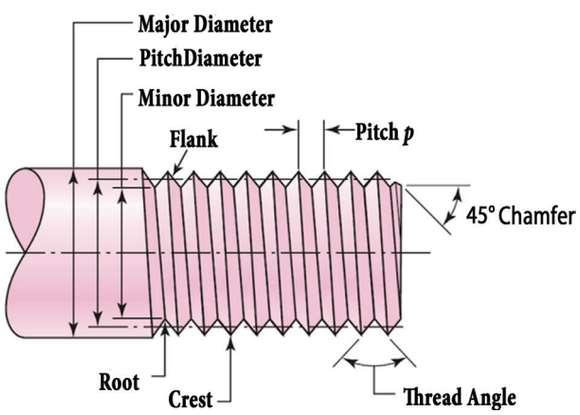

Figure 6 Thread Nomenclature

Name of the Part	Description
Major Diameter	This is the largest diameter of a screw thread, touching the crests of an external thread. A screw thread is specified by its major diameter.
Minor Diameter	This is the smallest diameter of a screw thread, touching the roots or core of an external thread.

XI_BME_CHAP08_2022.indd 109 5/2/2022 5:38:41 PM

Name of the Part	Description
Crest	It is the peak edge of the screw thread that connects adjacent flanks of a thread at the top
Root	It is the bottom edge of the thread that connects the adjacent flanks of a thread at the bottom.
Flank	The inclined flat surface of the thread which connects the crest and the root
Depth of Thread	The depth of the thread is the distance between the crest and root which is measured right angle to the axis.
Pitch	Pitch is the distance measured parallel to the axis, between one thread to the corresponding point on the adjacent screw threads.
Lead	It is defined as the distance which a screw moves axially in one complete rotation. Lead is equal to 1/TPI and is equal to pitch. (TPI- No. of Number of Threads per Inch)

8.5.2. Types of Threads

Thread are classified into two types V-shaped thread and square shaped thread, and further divided into the following in table.

Types	Pictures	Applications
Right Hand Thread		Used on bolts and nuts
Left Hand Thread		Left pedals of cycles, Blade assembly of a mixer grinder
Single Start Thread		Screws and screw-in hooks
Multi Start Thread		Gate valves, Vertical turret lathe, planetary screws
External Thread	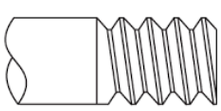	All types of screws and bolts, taps
Internal Thread		All type of nuts and dies

8.5.3. Forms of Threads

The thread form is the configuration of the thread in an axial plane. It is the profile of the thread, composed of crest, root and flanks.

Common standards followed in threads

1. British Standard Whitworth Thread (BSW)
2. British Association Thread (BA)
3. Metric Thread
4. Acme Thread

British Standard Whitworth Thread: This form of thread is used as a Standard thread in Britain. It is the modified form of 'V' thread having angle of 55°. British

XI_BME_CHAP08_2022.indd 110 5/2/2022 5:38:41 PM

Standard Fine (BSF) and British Standard Pipe (BSP) threads have the same profile of the BSW threads. It is widely used in machine parts. The British Standard threads with fine pitches (B.S.F) are used where more strength is required.

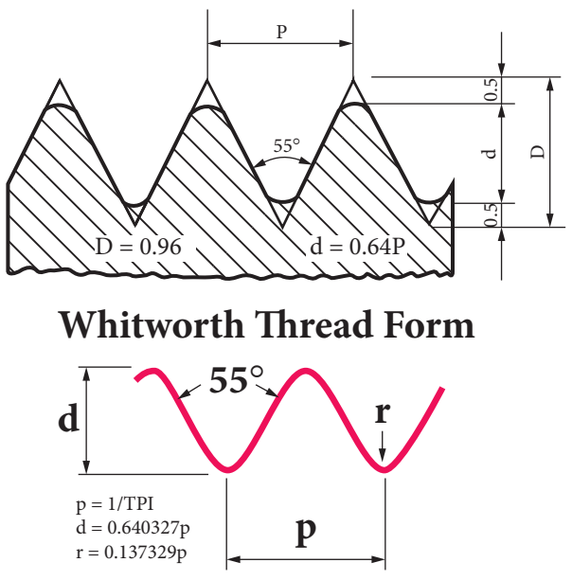

Figure 7 British Standard Whitworth Thread

British Association Thread: The angle of BA thread is 47½°. It has fine pitches. This form of thread is generally used at precious instrument like micrometer and vernier caliper, etc… screw having diameters less than ¼ inch.

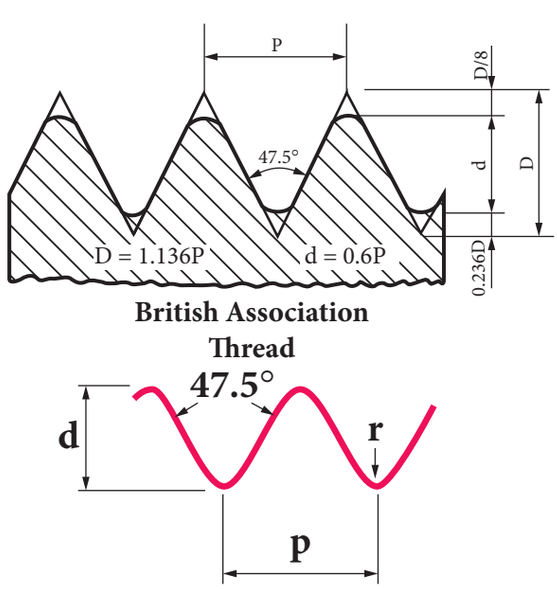

Figure 8 British Association Thread

Metric Thread: The angle of metric thread is 60°. It is an Indian Standard Thread and similar to B.S.W thread. This types of thread is mostly used in industries.

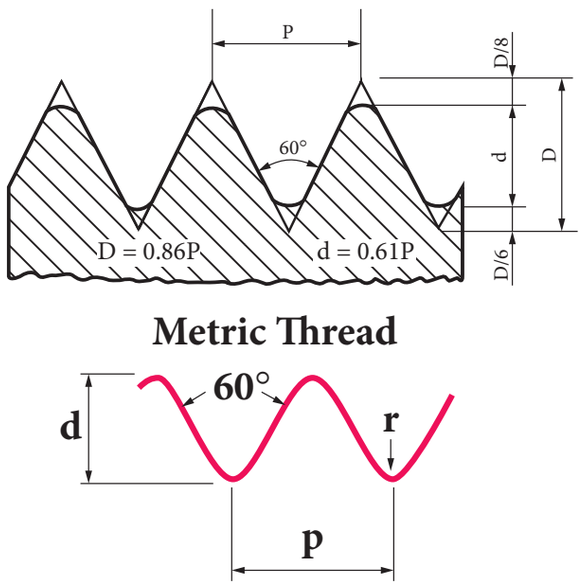

Figure 9 Metric Thread

Acme Thread: The angle of the thread is 29°. It is modification of square thread. It is stronger than square thread. This type of thread is used in lathe lead screws and radial drilling machine etc.

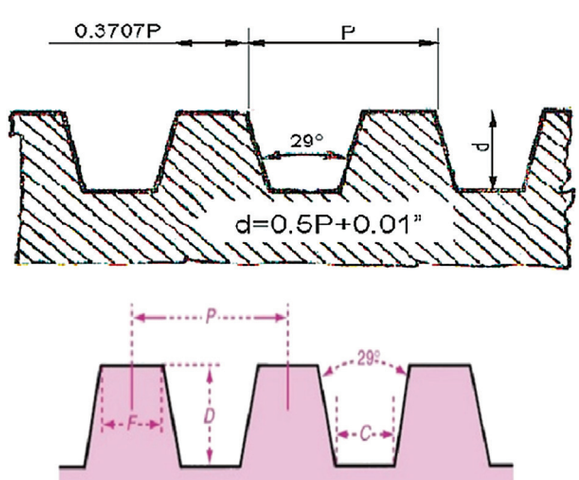

Figure 10 Acme Thread

XI_BME_CHAP08_2022.indd 111 5/2/2022 5:38:42 PM

8.6. WASHERS

A circular disc of a metal, having a hole in centre for inserting a bolt is known as a washer. It is placed between the nut and surface and head of bolt and surface to provide a perfect seating for the nut and bolt. The washer is generally specified by its hole diameter.



Figure 11 Washer

8.6.1 Uses of Washers

- To provide perfect seating on bolt
- The pressure applied on the nut is limited
- If the hole is bigger than the head of the bolt, the washer is used

8.6.2. Types of Washers

The washers are classified into two types as follows

1. Plain Washer
2. Spring Washer



Figure 12 Split Washer

8.7. KEYS AND KEYWAYS

Keys are machine elements used to connect a shaft and the parts, such as pulleys, gears, couplings etc. so the shaft rotates along with gears, (or) Flange also rotates which connected with shaft. It is subjected to shearing and torsion stresses, hence it is always made of steel.

The groove cut on the shaft and the groove cut inside the pulleys, gears and flange, which is parallel to their axis is called "key way".

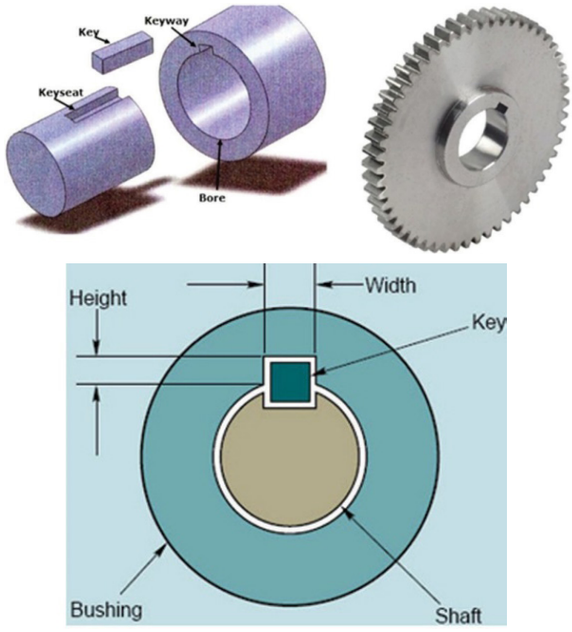

Figure 13 Key and Key Way

8.7.1. Types of Key

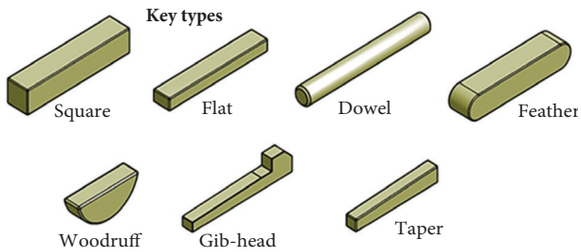

Sunk Key

This is a standard form of key and it may be either rectangular or square in cross section.

Parallel Key: A parallel key is rectangular or square in cross-section and uniform in width and thickness, through-out its length. These keys are generally used where pulleys, gears or other similar parts

XI_BME_CHAP08_2022.indd 112 5/2/2022 5:38:42 PM

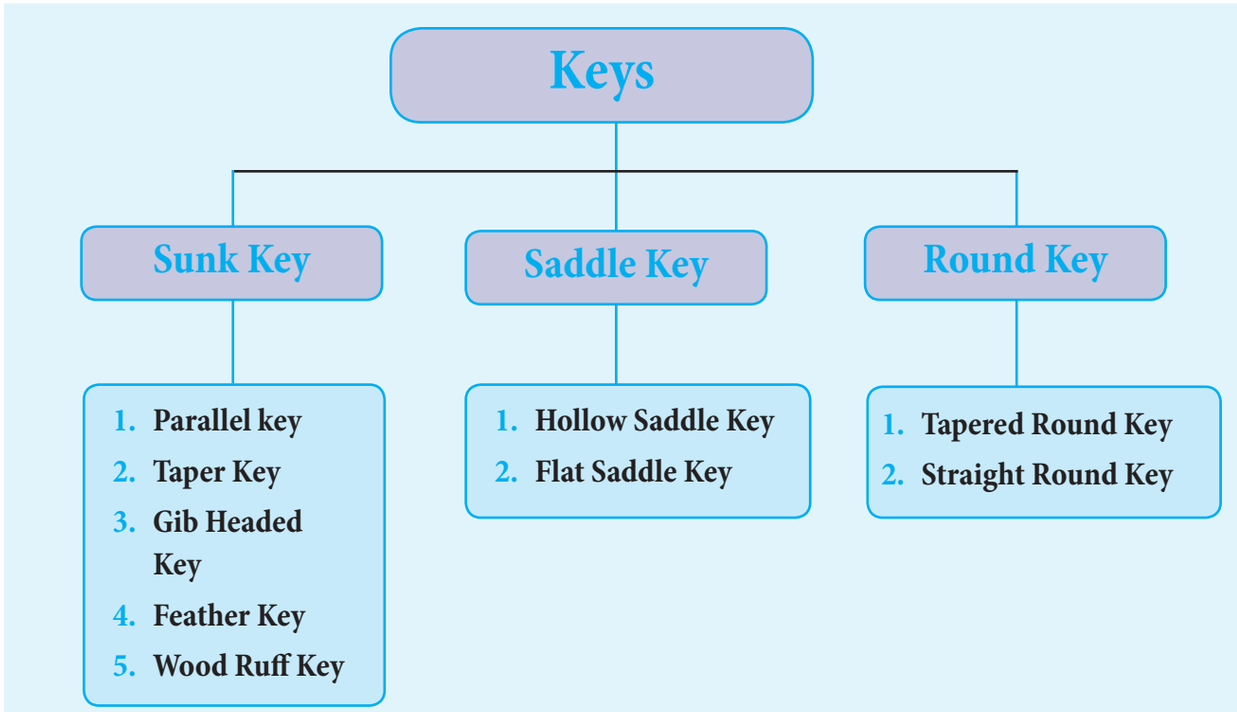

are secured to the shaft permitting relative axial movement.

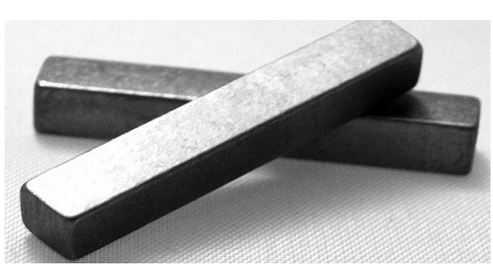

Figure 14 Parallel Key

Taper Key: A taper key is uniform in width but tapered in thickness. The bottom surface of the key is flatted and the top surface is tapered. The magnitude of the taper is 1:100.

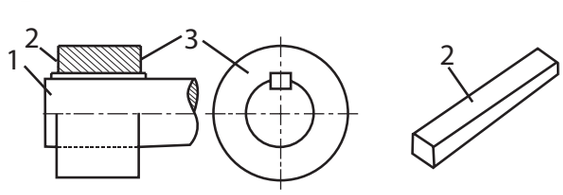

Figure 15 Taper Key

Gib-Headed Key: A taper key is generally removed by hammering at its thinner end, when that end is inaccessible. The key is usually provided with a head called gib-head which enable to remove the key. This type of key is used when the connected parts are to be separated occasionally for the pur- pose of repair.

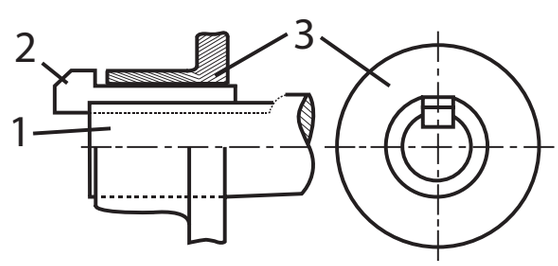

Figure 16 Gib-Headed Key

Feather Key: A Feather key is attached to one member of the pair, screwed to the shaft. Feather keys are parallel keys and permit relative axial movement of the pair. It may be rectangular, square, dovetail (or) rounded in cross-section.



Figure 17 Feather Key

XI_BME_CHAP08_2022.indd 113 5/2/2022 5:38:42 PM

Woodruff Key: A Wooduff key is also known as a half-moon key, is a semi-circular machine shaft that prevents gears, hubs, or other components form moving independently of a rotating shaft or spindle.

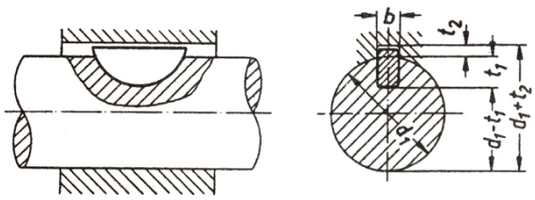

Figure 18 Woodruff Key

Saddle Key

The top of this key is fixed into the keyway of the hub. The bottom of the key is mounted on the shaft. There is no key- way in the shaft. Saddle keys are used for low power transmission.

Hollow Saddle key: A hollow saddle key has a concave shaped bottom to suit the curved surface of the shaft on which it is used. The keyway is only cut in the hub of the wheel. The relative rotation is prevented by the friction between the key and the shaft.

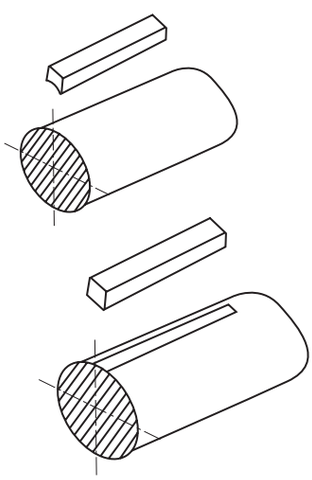

Figure 19 Saddle Key

Flat Saddle Key: It is similar to the hollow saddle key except that the bottom surface of it is flat. It fits on the flat surface provided on the shaft. It gives more gripping than a hollow saddle key.

Rounded Key

Keys of circular cross-section are called rounded keys, usually tapered along the length. A round key fits in the hole drilled partly in the shaft and partly in the hub. It is generally used for light duty transmission of power.

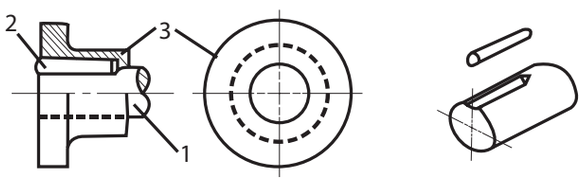

Figure 20 Rounded Key

8.7.2. Important Dimensions of Keys

D - Diameter of the shaft
T - Thickness of the key
W - Width of the key
R - Radius of the key
L - Length of the key
d - diameter of the key

Taper Ratio is 1 : 100

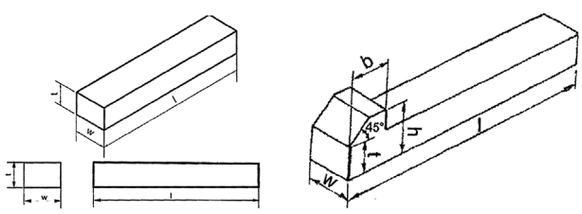

Figure 21 Dimensions of Key

XI_BME_CHAP08_2022.indd 114 5/2/2022 5:38:42 PM

Glossary

1.	Fasteners	இணைப்புப் பொருட்கள்
2.	Helical groove	சுருள் பள்ளம்
3.	Pulley	கப்பி
4.	Keys	சாவிகள்
5.	Shaft	உருளை தண்டு
6.	keyway	சாவிப்பள்ளம்

Activities

1. Collect different types of Bolts, Nuts, Washers, Keys.

QUESTIONS

P9G60

PART A

I. Choose the correct option :

1. An example for Permanent fastener is
   a) Welded Joint
   b) Screwed Joint
   c) Keyed Joint
   d) Couplings

2. A screw or bolt is specified by its
   a) Major diameter
   b) Minor diameter
   c) Pitch diameter
   d) Pitch

3. The washer is generally specified by its
   a) Outer diameter
   b) Hole diameter
   c) Thickness
   d) Mean diameter

4. keys are made of
   a) Tungston b) Steel
   c) Cast Iron d) Lead

5. The angle of metric thread is
   a) 55° b) 47°
   c) 60° d) 30°

PART B

II. Answer the following questions in one or two sentences:

6. Define 'pitch' of a thread?
7. What are the types of bolt?
8. Mention the types of sunk keys?
9. Mention the angles of following threads.
   a) BSW thread
   b) Metric thread
   c) Acme thread
10. Mention the form of threads?

XI_BME_CHAP08_2022.indd 115 5/2/2022 5:38:43 PM

PART C

III Answer the following questions in about a page?

11. Define "Temporary Fasteners" and "Permanent Fasteners" with examples.
12. Mention the types of threads and its uses.
13. Define 'Washer' and write its uses.
14. What are different types of keys?
15. What are the important dimensions of key?

PART D

IV. Answer the following questions in detail:

16. Write the difference between Temporary fasteners and Permanent fasteners?
17. Draw any one of assembled view of the keys and explain about it.
18. Draw and mention the nomenclature of threads.
19. Draw and explain any two forms of thread.

XI_BME_CHAP08_2022.indd 116 5/2/2022 5:38:43 PM

CHAPTER

9

TRANSMISSION OF POWER

LEARNING OBJECTIVES

1. To know about the Transmission of power.
2. To know about the types of transmission of power like open belt and cross belt.
3. To know about the gear transmission and their types

TABLE OF CONTENT

9.1. Introduction
9.2. Power Transmission
9.3. Belt Drive
9.4. Gears
9.5. Gear Train
9.6. Abstract of Transmission of Power

9.1 INTRODUCTION

- A source of power is always needed in workshop processes particularly in cutting and forming of metals. Electricity as a means of conveying power to machinery is widely adopted. The electrical energy is converted into rotational energy by means of an electric motor and the machine converts the input of rotational energy into various form of useful work.
- It is the movement of energy from its place of generation to a location where it is applied to perform useful work.

9.2. POWER TRANSMISSION

Power transmission devices are very commonly used to transmit power from one shaft to another. Belt, chains and gears are used for this purpose. When the distance between the shafts is large, belts and ropes are used and for intermediate distance chains can be used. Gear drive is used for short distances.

When power is transmitted by gears and chain, there is no slip in velocity ratio. It is called positive drive. When power is transmitted by a belt drive, there is always a possibility of some slip between the belt and the faces of the pulleys, so the character of motion transmitted is non-positive.

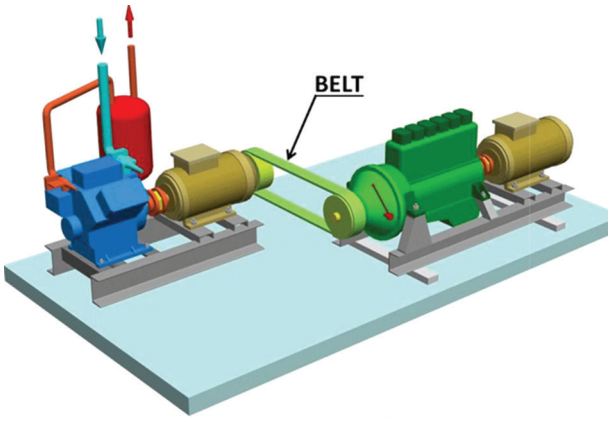

Figure 1 Transmission of Power

The common method of transmitting power are

1. Belt drive.
2. Gear drive.
3. Chain drive.
4. Clutch drive.
5. Rope drive.

9.3. BELT DRIVE

Belt drive is one of the common methods of transmitting motion and power from one shaft to another by means of a thin inextensible band running over two pulleys.

In a belt drive arrangement, the shaft which transmits the rotational power is known as the driving shaft. The pulleys mounted on the driving shaft is known as driver (or) driving pulley. The shaft which receives the rotational power is known as driven shaft and the pulley mounted on it is known as follower or driven pulley. The transmission of power becomes possible because of the grip between the pulley and the belt. Belt drive is generally used in mills and factories.

9.3.1. Types of Belt Drive

The belt drives are divided into two types.

1. Open-belt drive.
   a) Simple belt drive
   b) Compound belt drive
2. Crossed belt drive.

Open-belt Drive

In this type of belt drive the belt is not crossed. The belt connects the top portions of the pulleys directly. The grip between the belt and the pulley is minimum. The driver and the follower rotate in the same direction.

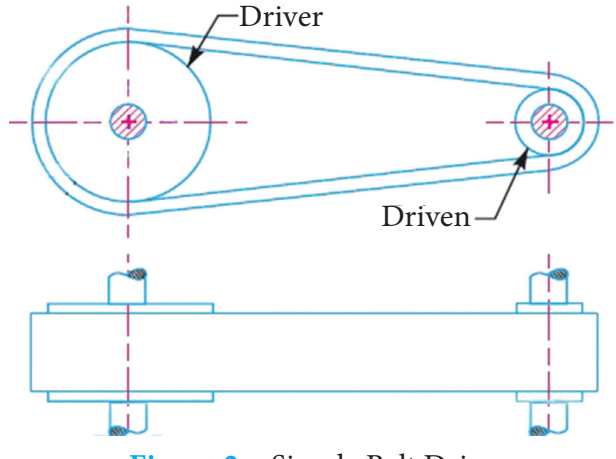

Figure 2 Simple Belt Drive

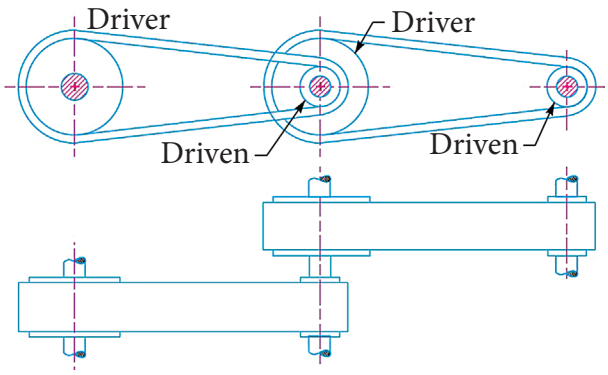

Figure 3 Compound Belt Drive

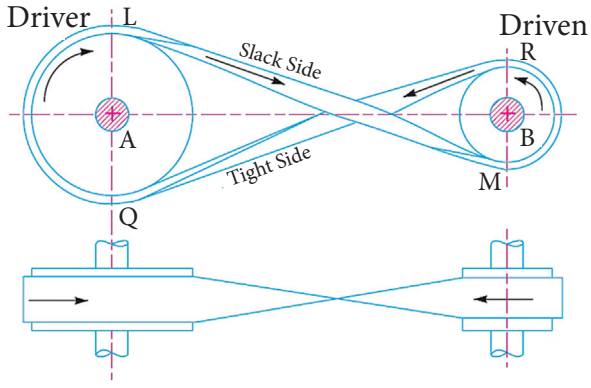

Figure 4 Crossed Belt Drive

Cross belt Drive

In this type of belt drive, the belt is crossed between the pulleys. The belt connects the top portion of the driver with the lower portion of follower. The grip between the belt and pulley is greater because of the crossed nature of the belt. The pulleys connected by the cross belt arrangement rotate in the opposite directions. If the driver rotates in clockwise direction, the follower will rotate in the anticlockwise direction.

9.3.2. Types of Belt

Belt is usually made from leather, rubber and canvas thread in a moulded form. The two ends of a belt are connected by hooks and pins. Generally two forms of belts are used.

1. Flat belt.
2. V –belt.

Type of Belt	Description	Picture
Flat Belt	• Cross section thickness 0.75mm to 5mm. • Transmission of power is low • Flat face pulleys are used • Distance between two shafts are more	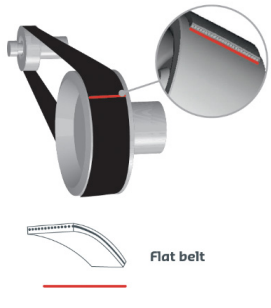
V- Belt	• Cross section thickness 8mm to19mm. • Transmission of power is high • V-groove pulleys are used. • Distance between two shafts are less	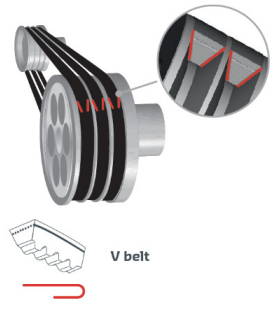

9.3.3. Velocity Ratio of a Belt Drive

Velocity ratio of a belt drive is the ratio of number of revolutions of follower to the number of revolutions of driver in a particular time.

If D_1 and D_2 are the diameter of driver and follower and N_1 and N_2 are the number of revolutions per minute of the driver and the follower.

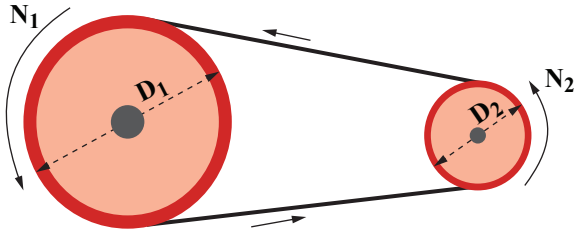

Figure 5 Velocity Transmission

$$\text{Velocity ratio} = \frac{N_2}{N_1} = \frac{D_1}{D_2}$$

Though the theoretical value of velocity ratio is calculated as above, it differs from it because of the thickness of the belt and belt slip. These factors should also be taken into account in calculating the actual velocity ratio.

The speed of the shaft or the pulley is expressed in Revolutions Per Minute (RPM). If we want to increase the speed of the follower with respect to the driver, the pulley on the driven shaft should be smaller in size (diameter) than the pulley on the driving shaft. If we want to decrease the speed of the follower, the pulley on the driven shaft should be larger in size.

$$D_1N_1 = D_2N_2$$

EXAMPLE 1

Pulley of diameters 360 mm and 60 mm are connected by a belt drive. Find the velocity ratio.

$D_1 = 360$ mm

$D_2 = 60$ mm

Driver pulley speed = N_1

Driven pulley speed = N_2

Driving pulley diameter(D_1) = 360 mm

Driven pulley diameter (D_2) = 60 mm

$$\text{Velocity ratio} = \frac{N_2}{N_1} = \frac{D_1}{D_2} = \frac{6}{1} = \frac{360}{60} = 6:1$$

Velocity ratio = 6:1

EXAMPLES 2

Two pulleys of diameters of 500 mm and 250mm are connected by means of a open belt drive. If the larger pulley rotates at a speed of 400 rpm in clockwise direction, find the speed and direction of rotation of the smaller pulley.

$D_1 = 500$ mm $\qquad$ $D_2 = 250$ mm

$N_1 = 400$ rpm

Driving pulley diameter (D_1) = 500 mm

Driven pulley diameter (D_2) = 250 mm

Driver pulley speed N_1 = 400 rpm

Driven pulley speed N_2 = ?

$$D_1N_1 = D_2N_2$$

$$N_2 = \frac{D_1N_1}{D_2}$$

$$= \frac{500 \times 400}{250}$$

N_2 = 800 rpm clockwise direction

EXAMPLES 3

Two shafts are connected by a belt drive. On one of the shafts, a pulley of 200 mm diameter is fitted and it rotates at a speed of 3000 rpm in anticlockwise direction. What should be the diameter of the driven pulley if it is to rotate at a speed of 1500 rpm in clockwise direction? What should be the type of belt drive?

$D_1 = 200$ mm $\qquad D_2 = ?$

$N_1 = 3000$ rpm $\qquad N_2 = 1500$ rpm

Driving pulley diameter $(D_1) = 200$mm

Driven pulley diameter $(D_2) = ?$

Driving pulley speed $N_1 = 3000$ RPM

Driven pulley speed $N_2 = 1500$ RPM

$$D_1N_1 = D_2 N_2$$

$$D_2 = \frac{D_1N_1}{N_2}$$

$$= \frac{200 \times 3000}{1500}$$

$$= 200 \times 2$$

$D_2 = 400$ mm

The diameter of the pulley is 400 mm and the belt should be connected in cross belt method.

9.3.4. Belt Slip

When power is transmitted through belt driver, the follower of the driver will not rotate at the estimated speed. It will rotate at a lower speed only. The main reason for this defect is slackness of the belt.

Belt slip is the difference between the distance covered by a point on the pulley and the distance covered by a point on the belt per minute. Belt slip is always expressed in percentage.

$$\text{Belt slip (S)} = \frac{\text{Estimated speed} - \text{Actual speed} \times 100}{\text{Estimated speed}}$$

If D_1 and D_2 are the diameters of the pulleys and N_1 and N_2 are their speed in rpm and 'S' is the amount of belt slip in percentage.

$$\text{Velocity ratio} = \frac{N_2}{N_1} = \frac{D_1}{D_2} \times \frac{(100 - s)}{100}$$

EXAMPLE 4

A driving pulley of diameter 120 mm rotates at a speed of 400 rpm. The driven pulley of diameter 80 mm connected by a belt drive rotates at speed of 588rpm. Find the percentage of belt slip.

$D_1 = 120$ mm $\qquad D_2 = 80$ mm

$N_1 = 400$ rpm $\qquad N_2 = ?$

Driving pulley diameter $(D_1) = 120$ mm

Driven pulley diameter $(D_2) = 80$ mm

Driving pulley speed $N_1 = 400$ RPM

Driven pulley speed $N_2 = ?$

$$D_1N_1 = D_2 N_2$$

$$N_2 = \frac{D_1N_1}{D_2}$$

$$= \frac{120 \times 400}{80}$$

$$N_2 = 600 \text{ RPM}$$

Estimated speed $N_2 = 600$ RPM

Actual speed $N_2 = 588$ RPM

The estimated speed of the driven pulley is 600 rpm. But it rotates at 588 RPM.

$$\text{Belt slip\%} = \frac{\text{Estimated speed} - \text{Actual speed} \times 100}{\text{Estimated speed}}$$

$$= \frac{600 - 588}{600} \times 100$$

$$= \frac{12}{600} \times 100$$

$$= 2$$

9.3.5. Belt Drive Advantages and Disadvantages

Advantages

1. Absorbs noise and vibrations
2. Protects from overload
3. Needs little maintenance
4. Allows misalignment (Parallel shafts)

Disadvantages

1. Speed ratio is not constant (Slip & Stretch)
2. Speed limited- 2000 m/min
3. Endless belts needs special attention to install
4. Belt may slip from Pulley while rotate

9.4. GEARS

Gears are used to transmit power between rotating parts to operate various machines. The power transmission is achieved without any slip. It is also advantageous in the sense that higher velocity ratio can be achieved in limited space.

Only parallel shafts are connected by belt drive whereas parallel non-parallel and perpendicular shafts are connected by means of gears to transmit power.

9.4.1. Forms of Gears

There are different forms of gears namely:

1. Spur gear.
2. Helical gear.
3. Bevel gear.
4. Rack and pinion gear.
5. Worm and worm gear.

Spur Gear

Spur gears have their teeth elements parallel to the rotating shafts. These gears are used to transmit power between parallel shafts. A small sized gear is called pinion.



Figure 6 Spur Gear

Helical Gears

If the teeth elements are twisted or helical, they are known as helical gears. These gears may be used for connecting shafts that are at an angle in the same plane or in different planes. They are smooth acting because there will always be more than one tooth in contact. Depending upon helix, the helical gears are classified as right hand type or left hand type.



Figure 7 Helical Gear

Bevel Gears

The power is transmitted between two shafts which are at right angles through bevel gears. It is in the shape of a truncated cone having all the teeth elements on the conical surface.



Figure 8 Bevel Gear

Rack and Pinion Gears

This type of gear is used to convert rotary motion into linear motion or vice versa. The rack gears are straight and flat and have no curvature. This type of gear is used in lathe and drilling machine.



Figure 9 Rack and Pinion Gear

Worm and Worm Gears

Worm and worm gear are used to transmit power between two perpendicular shafts. Worm may be single threaded or multi-threaded. The worm gear resembles a spur gear. In this gearing the worm will always be the driver. This gearing is used where a large speed reduction is desired. It is useful in indexing head, rotary table and in the feed rod of lathe.



Figure 10 Worm and Worm Gear

9.5. GEAR TRAIN

Gear drive is used where moderate to large amount of power is to be transmitted at constant velocity ratio. If the driving gear rotates in the clockwise direction, the follower will rotate in the anti- clockwise direction. The velocity ratio of a gear drive depends on the number of teeth present on the driving gear and the driven gear.

9.5.1. Velocity Ratio of Gear Drive

Velocity ratio of a gear drive is the ratio of number of revolutions of driven shaft of driven gear to the number of revolutions of driving shaft or driving gear in a particular time.

If N_1 and N_2 are driving gear and driven gear are the number of revolution of driving gear and driven gear and T_1 and T_2 are the number of teeth of the driving gear and the driven gear.

$$\text{Velocity ratio} = \frac{N_2}{N_1} = \frac{T_1}{T_2}$$

Example 5

If a gear having 48 teeth rotates at a speed of 600rpm. In clock-wise direction, what will be speed and direction of rotation of a gear having 72 teeth which is in mesh with the first one ?

T_1 = 48 teeth T_2 = 72 teeth

N_1 = 600 rpm N_2 = ?

Number of teeth on the driving gear (T_1) = 48 teeth

Number of teeth on the driven gear (T_2) = 72 teeth

Number of rotational of driving gear (N_1) = 600 rpm.

Number of rotational of driven gear (N_2) = ?

$$\frac{T_1}{T_2} = \frac{N_2}{N_1}$$

$$N_2 = \frac{T_1 \times N_1}{T_2}$$

$$= \frac{48 \times 600}{72} = 400 \text{ rpm}$$

N_2 = 400 rpm Anti clock wise direction

9.5.2. Simple Gear Train

If a gear train is arranged by keeping only one gear on a shaft, it is called simple gear train.

The net velocity ratio of the gear drive is determined by the number of teeth present on the first and the last gears of the drive. The intermediate gears of the drive using only to fill the gap between the driving shaft and the driven shaft, is called Ideal gear. It is also useful in changing the direction of rotation of the follower without changing the speed.

In simple gear train, if the total number of gears are in odd number then the first and last gear rotates in the same direction.

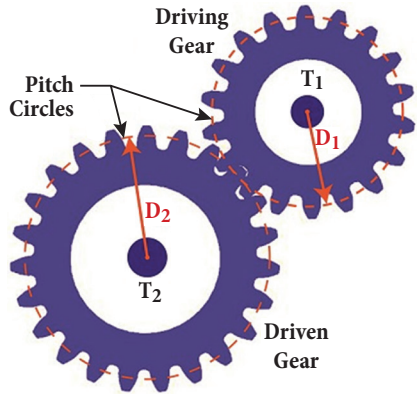

Figure 11 Simple Gear Drive

Example 6

Gears A, B, C and D are connected by a simple gear train. The number of teeth on them are 75, 45, 60 and 50. If the gear D rotates at a speed of 360 rpm in clock-wise direction, what will be the speed of the gear A.

T_1 = 75 teeth T_2 = 45teeth

T_3 = 60 teeth T_4 = 50teeth

Number of teeth on the driving gear (T_1) = 75 teeth

Number of teeth on the ideal gear (T_2) = 45 teeth

Number of teeth on the ideal gear (T_3) = 60 teeth

Number of teeth on the driver gear (T_4) = 50 teeth

Number of rotational of driven gear N_4 = 360 rpm

$T_1 N_1 = T_4 N_4$

$$N_1 = \frac{T_4 \times N_4}{N_1} \qquad N_1 = \frac{50 \times 360}{75}$$

$$N_1 = \frac{2 \times 360}{3} = 240 \text{ rpm}$$

N_1 = 240 RPM Anti clock wise direction

9.5.3. Compound Gear Train

If the gear drive is arranged by keeping more than one gear on a shaft, it is called compound gear train. The net velocity ratio of the gear drive is influenced by the intermediate gear also, so it is possible with a compound gear train to attain a higher velocity ratio in limited space. The direction of rotation of the follower with respect to the driver is determined by a number of intermediate gears on separate shafts.

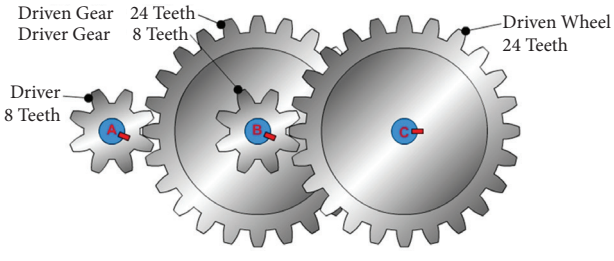

Figure 12 Compound Gear Train

Two gears mounted in the same shaft. So rotational speed are same. ($N_2 = N_3$)

Velocity ratio: $\frac{N_4}{N_1} = \frac{T_1}{T_2} \times \frac{T_3}{T_4}$

Example 7

A compound gear train is arranged in which the driving shaft 1 and shaft 3 through intermediate shaft 2. The gear A on shaft 1 has 40 teeth which rotates at 900 rpm in clock wise direction. It meshes with a gear B of 80 teeth on shaft 2. This shaft has another gear with 50 teeth which meshes with a gear, C on shaft 3. What is the speed and direction of rotation of the gear on shaft 3 which has 60 teeth?

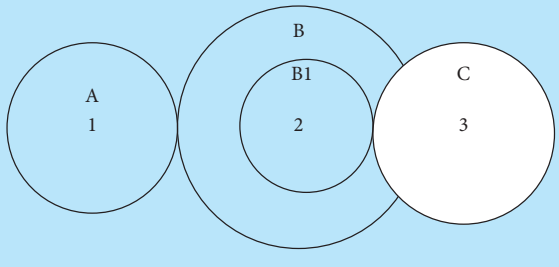

T_A = 40teeth T_B = 80teet T_C = 60teeth

N_A = 900rpm T_{B1} = 50teeth

Number of teeth on the driving gear (T_A) = 40 teeth

Number of teeth on the intermediate shaft gear (T_B) = 80 teeth

Number of teeth on the intermediate shaft gear (T_{B1}) = 50 teeth

Number of teeth on the driver gear (T_C) = 60 teeth

Number of rotational of driving gear (N_A) = 900 rpm

$$N_B = \frac{T_A N_A}{T_B}$$

$$N_B = \frac{40 \times 900}{80}$$

N_B = 450 RPM

Two gears (N_B and N_{B1}) mounted in the same shaft. So rotational speed are same.

$N_B = N_{B1}$ = 450 RPM

$$N_C = \frac{T_{B_1} \times N_{B_2}}{T_c}$$

$$= \frac{50 \times 450}{60}$$

= 375 RPM

N_C = 375 RPM Anti clock wise direction

9.5.4. Advantages and Disadvantages of Gears

Advantages of Gears

1. By using gear train, large velocity ratio can be obtained with minimum space
2. Gears are mechanically strong, So higher loads can be lifted
3. They are used for positive drive, so its velocity ratio remains constant.
4. Gears require only lubrication, hence less maintenance is required.

Disadvantages of Gears

1. They are not suitable for large velocities.
2. They are not suitable for transmitting motion over a large distance.
3. They have no flexibility
4. Gear operation is noisy.

9.6. ABSTRACT OF TRANSMISSION OF POWER

1. Methods of transmitting power	1. Belt drive 2. Chain drive 3. Gear drive
2. Transmitting motion of Belt drive	1. Belt Slip 2. Belt are used to distance between the connected shafts is high.
3. Transmitting power, chain and gears	1. No slip in velocity ratio 2. Chains are used to connect small gab between the shafts.
4. Velocity ratio without slips	Positive drive (Chain drive, Gear drive)
5. Velocity ratio with slip	Non – Postive Drive(Belt drive)
6. Shaft which transmits the rotational power is connected with electric motor.	Driving PULLEY
7. Shaft which receives the Rotational power is Known as driven shaft and Pulley mounted on it is Known as	FOLLOWER (or) DRIVEN PULLEY
8. The transmission of power becomes possible because of the _____ between pulley and belt	Grip
9. Open belt drive	The driver and the follower Rotate in the same direction

10. Cross belt drive	1. The driver and the follower rotate in opposite direction. 2. The grip between the belt and pulley is greater
11. Types of belt	1. Flat belt 2. V–belt
12. The thickness of a flat belt	0.75mm to 5mm
13. The efficiency of the flat belt	98%
14. The thickness of the V_belt	8mm to 19mm
15. The efficiency of the V_belt	70% to 98%
16. Velocity ratio of a belt drive	$\frac{N_2}{N_1} = \frac{D_1}{D_2}$ D_1, D_2 are the diameter of driver and follower. N_1, N_2 are the number of revolutions perminute of the driver and follower.
17. Velocity ratio depends on	1. Thickness of the belt 2. Slip of the belt.
18. Belt slip (%) (s)	$S = \frac{\text{Estimated speed} - \text{Actual speed}}{\text{Estimated speed}} \times 100$
19. Velocity Ratio with considering slip	$\frac{N_2}{N_1} = \frac{D_1}{D_2} \times \left(\frac{100 - s}{100}\right)$
20. Spur gears	1. Gear teeths are parallel to the shaft axis. 2. These gears are used to Transmit power between Parallel shafts.
21. Helical gears	1. The teeth are inclined to the shaft axis 2. They are smooth acting Because there will always engage more than one tooth in contact
22. Bevel gears	1. The teeth elements on the conical surface. 2. The power is transmitted Between two shafts which are at right angles though bevel gears.
23. Rack and pinion gears	1. The rack gears are straight and flat and pinion are rotate. 2. This type of gear is used to convert rotary motion into linear motion or Vice versa

24. Worm and worm gears	1. worm may be single threaded or multi threaded. 2. This gearing is used where a large speed reduction. 3. Worm and worm gear are used to transmit power between two perpendicular (90°) shafts.
25. Two gears are rotates with each other	1. Driving gear rotates in the clockwise direction 2. The follower will rotate in the anti-clock wise direction.
26. Velocity ratio of gear rive	$\frac{N_2}{N_1} = \frac{T_1}{T_2}$ T_1 and T_2 are the number of teeth on the driving gear and the driven gear. N_1 and N_2 are the number of revolutions of driver and follower
27. Simple gear train	1. If a gear train is arranged by keeping only one gear on a shaft 2. If the total number of gears are in odd number then the first and the last gear & rotates in the same direction.
28. Compound gear train	1. If the gear drive is arranged by keeping more than one gear on a shaft. 2. The net velocity ratio of the gear drive is influenced by the intermediate gear also.

GLOSSARY

1. Spur Gear - நேர்ப்பல்லிணை
2. Helical Gear - நெளிவுப்பல்லிணை
3. Bevel Gear - சரிவுப்பல்லிணை
4. Rack and Pinion - தட்டை மற்றும் சிறு பல்லிணை

ACTIVITIES

1. Make a open belt drive, cross belt drive and chain drive by using scrab material.

QUESTIONS

PART A

I. Choose the correct option :

1. Power is transmitted between shafts at moderate distance by
   a) belt drive b) gear drive
   c) chain drive d) friction drive

2. The diameter of the driving pulley is 200 rpm. The velocity ratio of the drive is 4. The diameter of the driven Pulley is
   a) 100cm b) 25cm
   c) 40cm d) 50cm

3. Velocity ratio of a gear drive is
   a) $D_1N_1 = D_2N_2$
   b) $\frac{N_T - N_A}{N_T} \times 100$
   c) $= \frac{T_1}{T_2} = \frac{N_2}{N_1}$
   d) RPM

PART B

II. Answer the following questions in one or two sentences:

4. Expand r.p.m.
5. What are the types of belt drive?
6. Mention any two forms of gear?
7. What is an idle gear?
8. What is a bevel gear?
9. What are methods by which power can be transmitted?

PART C

III Answer the following questions in about a page?

10. Explain velocity ratio?
11. Draw a simple gear train and explain.
12. Draw a compound gear and explain.
13. Explain power transmission by a belt drive.
14. Explain velocity ratio.
15. Draw a simple gear and explain.
16. Draw a compound gear and explain.

PART D

IV. Answer the following questions in detail:

17. Explain open belt drive with a diagram.
18. Draw and explain cross belt drive.

CHAPTER

10 ELECTRICITY

LEARNING OBJECTIVES

1. To know about the basics of electricity, Faraday's laws and Flemming Rules.
2. To know about basic of circuits.
3. To know about the direct current and alternative current.
4. To know about the electric motor, starter and their types

TABLE OF CONTENT

10.1. Introduction
10.2. Basics of Electricity
10.3. Ohm's Law
10.4. Electrical Circuit
10.5. Magnetism
10.6. Faraday's Laws
10.7. Direction of E.M.F
10.8. Motors
10.9. Starter

10.1 INTRODUCTION

- Electricity is a form of energy resulting from the flow of charged particles such as electrons. Electricity is used to power electric lamps, electric cookers, refrigerators, air conditioners, machines, etc.
- Benjamin Franklin discovered electricity. Later, that Thomas Alva Edison invented electric bulb in 1879.

10.2. BASICS OF ELECTRICITY

Electricity is a type of energy. All matters whether it is solid, liquid, or gaseous consist of minute particles known as atoms. According to modern research electric current means the movement of electrons. Figure 1 explains the basics of electricity.

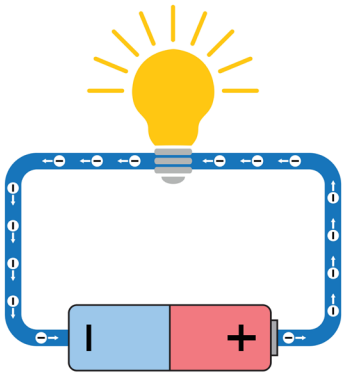

Figure 1 Basics of electricity

10.2.1. Voltage

The electric pressure (Electrical Potential) which is used to move electrons from one end to another end is called voltage. It is represented by the letter '**V**' and the unit is volt. It is measured by a voltmeter

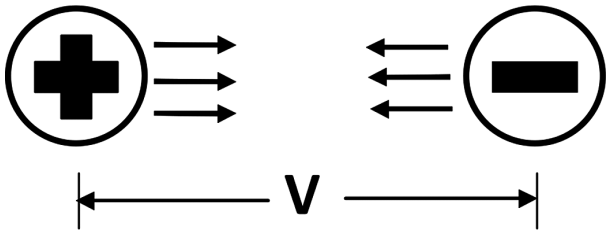

Figure 2 Voltage

10.2.2. Current

The flow of electrons in a conductor is called current. It is represented by the letter 'I' and the unit is called ampere (A). Current can be measured by the ammeter.

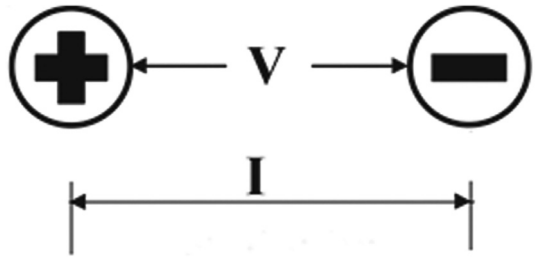

Figure 3 Current

Current can be classified in to two types

1. Direct Current (DC)
2. Alternative Current (AC)

Direct Current: D.C means direct current, Current flows as electrons from negative potential to positive potential. D.C is generally produced by chemical processes as in batteries. D.C generators are used for generation of high capacity current. The current flows only in positive direction.

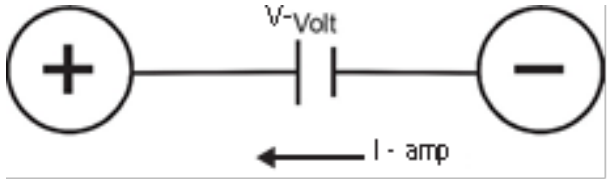

Figure 4 DC Current

Alternative Current: A.C means alternative current. Magnitude, direction of current and voltage alternate continuously. The flow of current changes direction periodically. Its frequency is 50 cycles/sec

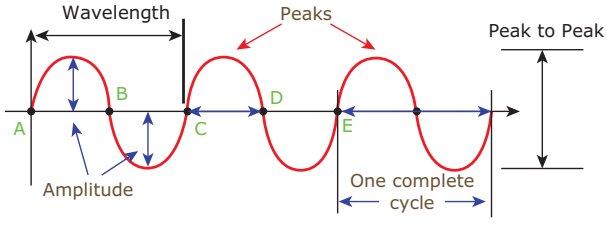

Figure 5 AC Current

Difference between DC and AC

Direct Current	Alternative Current
Direct current cannot be transferred over long distance.	Alternative current can be transferred over long distance.
It does not change its direction.	It reverses is direction periodically.
It is mainly obtained from battery or cell	It is mainly obtained from AC Generator.
There is no frequency for DC	The frequency of AC is 50Hz and 60Hz depending on the country.
The magnitude of current does not change with time.	The magnitude of current changes with time.

10.2.3. Resistance

Resistance may be defined as the property of a substance which opposes the flow of current flowing through the conductor. It is represented by the letter R and the unit is ohm (Ω). It is measured by ohm meter.

Example: when compare gold to iron, gold has less resistance value.

Resistance depends upon materials. Also the resistance depends on the temperature co-efficient of the material.

10.2.4. Power

Electric power is the rate of doing work. In other words, an amount of electric work done in a unit of time. It is represented by symbol **P** and the unit of power is watts (W).

Power (P) = Voltage (V) x Current (I)

P = VI

10.3. OHM'S LAW

Ohm's law states that, "In any closed circuit the current is directly proportional to the voltage applied and inversely proportional to the resistance of the circuit at a constant temperature".

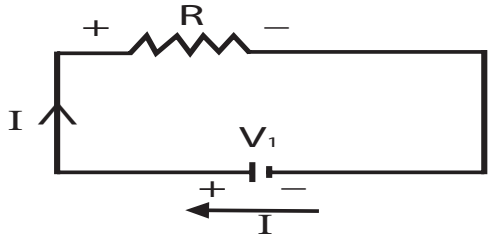

Figure 6 Ohm's Law

i.e: I α V and I α 1/R from this

V= I × R and R=V/I

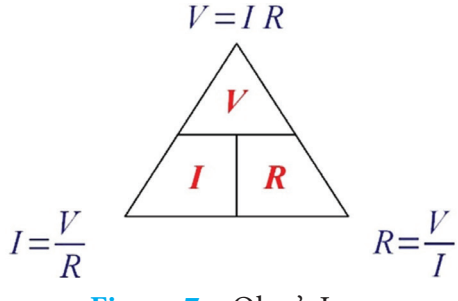

Figure 7 Ohm's Law

Where,

I = current,
V = voltage,
R = resistance.

10.4. ELECTRICAL CIRCUIT

The circuit is defined as the current flows from the supply points through the load to complete the path. Types of circuits:

1. Series circuit
2. Parallel circuit

10.4.1. Series circuit

When a circuit is made up of two or more resistance it is connected in series, it is known as series circuit.

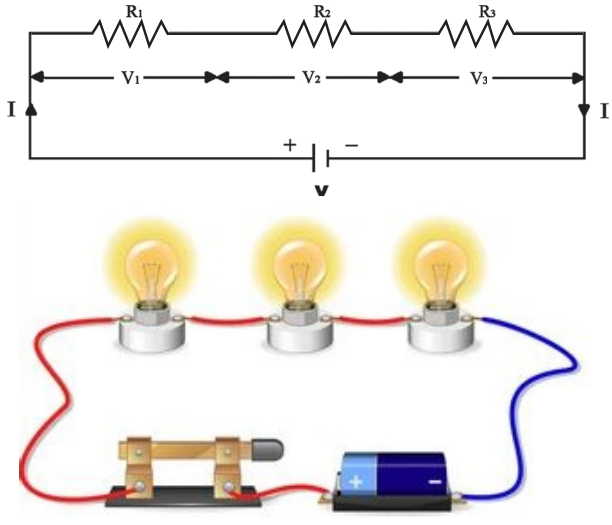

Figure 8 Series Circuit

$$V = V_1 + V_2 + V_3$$

$$R = R_1 + R_2 + R_3$$

I = same for all elements.

10.4.2. Parallel Circuit

When two or more resistances are connected parallel to each other with same starting and ending points, this circuit is known as parallel circuit.

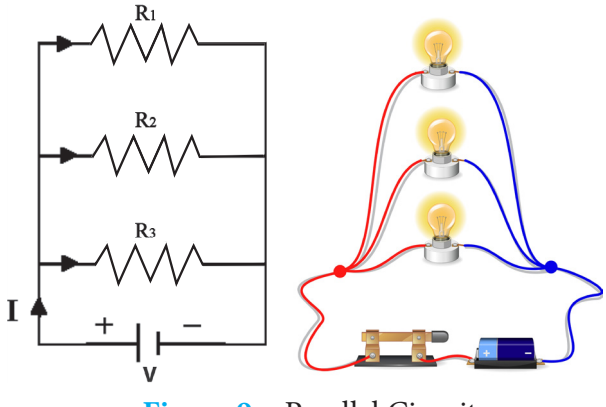

Figure 9 Parallel Circuit

$$V = V_1 = V_2 = V_3$$

$$I = I_1 + I_2 + I_3$$

$$1/R = 1/R_1 + 1/R_2 + 1/R_3$$

10.5. MAGNETISM

Magnetism is an important part in electrycity. The force to attract iron is known as Magnetism. The substance which possesses magnetism is called Magnet. The materials attracted by magnet is known as Magnetic materials.

10.5.1. Electromagnetism

When a current is passed through a coil of wire, a magnetic field is setup around the coil. If soft iron bar is placed inside the coil of wire carrying current, the iron bar becomes magnetized. This process is known as electro magnetism.

10.5.2. Magnetic Flux

Magnetic flux is a group of lines of force crossing the space of a magnetic field. It is denoted by Ø. The unit of magnetic flux is weber in M.K.S system and Maxwell in C.G.S system.

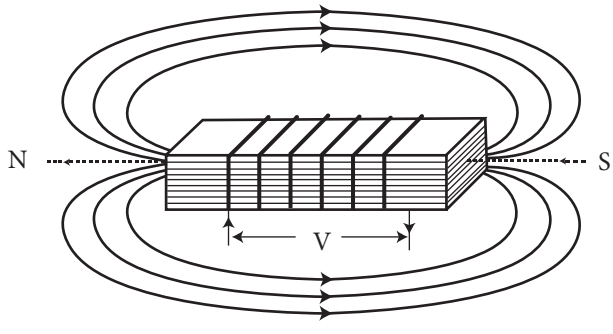

Figure 10 Magnetic Flux

10.5.3. Electro Magnetic Induction

The current is induced in a conductor when it is cut by a magnetic flux, it is known as Electro Magnetic induction. The current induced is known as Electro Motive Force (E.M.F). The e.m.f induced in the conductor depends upon the strength of the magnetic flux and the speed at which conductor cuts the flux

10.6. FARADAY'S LAWS

Faraday's law of induction is a basic law of electromagnetism predicting how a magnetic field will interact with an electric circuit to produce an electromotive force (EMF).

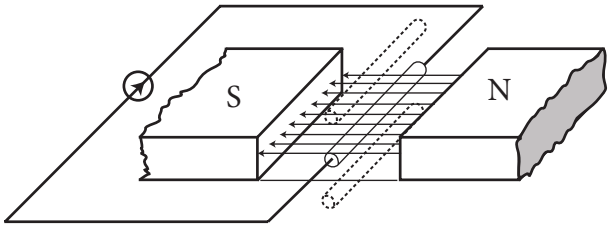

Figure 12 Faraday's Law

10.6.1. First law

Whenever any conductor is made to rotate in a magnetic field and hence to cut the magnetic lines of force or the flux, an electro motive force (e.m.f) will be induced in that conductor.

10.6.2. Second law

The magnitude of the induced e.m.f is directly proportional to the rate of change of flux linked with the conductor.

10.7. DIRECTION OF E.M.F

The relation between the directions of the motion of conductor, the induced e.m.f and the magnetic flux can be explained by Flemming's right hand and left hand rules.

10.7.1. Flemming 's Right Hand Rule

If we stretch the thumb, forefinger and the middle finger of the right hand mutually at right angles to each other and the thumb indicates the direction of motion of the conductors and the fore finger in the direction of the magnetic flux, then the middle finger indicates the direction of induced e.m.f.

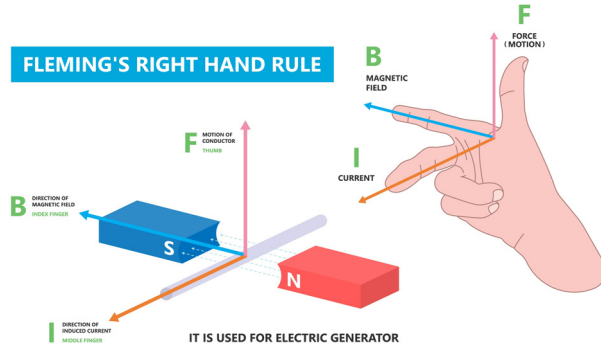

Figure 13 Flemming's Right hand rule

10.7.2. Flemming 's Left Hand Rule

If we stretch the thumb, fore finger and the middle finger of the left hand mutually at right angles to each other and the forefinger indicates the direction of the magnetic flux and the middle finger is in the direction of induced e.m.f then the thumb indicates the direction of motion of the conductors.

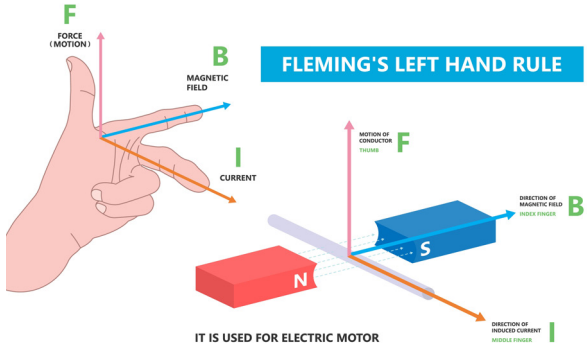

Figure 14 Flemming's Left Hand Rule

10.8. MOTORS

An electric motor is a device used to convert electrical energy into mechanical energy. Different types of motors are used according to their usage and the place in which they are used.

10.8.1. Types of Motor

1. D.C Motor (Direct current Motor)
   a. Brush Dc
      i. Shunt Wound
      ii. Series Wound
      iii. Compound Wound
      iv. Servomotor
   b. Brushless DC
2. A.C Motor (Alternative Current Motor)
   a. Single phase induction motor
      i. Split phase induction motor
      ii. Capacitor induction motor
      iii. Repulsion motor
      iv. Shaded pole motor.
   b. Three phase induction motor
      i. Squirrel - gauge induction motor
      ii. Slip ring induction motor

10.8.2. Principle of Three Phase Induction Motors

When the three phase supply is supplied to three phase windings placed 120° apart inside the stator of an induction motor, a constant rotating magnetic field is induced.

It induces e.m.f in the conductors of the rotor known as armature. According to Lens' law, we know that when an e.m.f is induced in a circuit electromagnetically, the current setup always opposes the motion or change in the current which produces it.

10.8.3. Basic Construction of Motor

The main parts of an induction motor are

1. Stator
2. Rotor.

STATOR: It is made of thin sheets arranged as tube. The laminated core has slots cut longitudinally on it parallel to the axis. It is wound for two, four, six, and eight poles depending on the required speed.

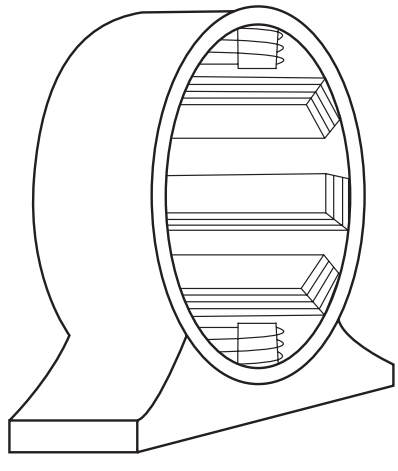

Figure 16 Stator

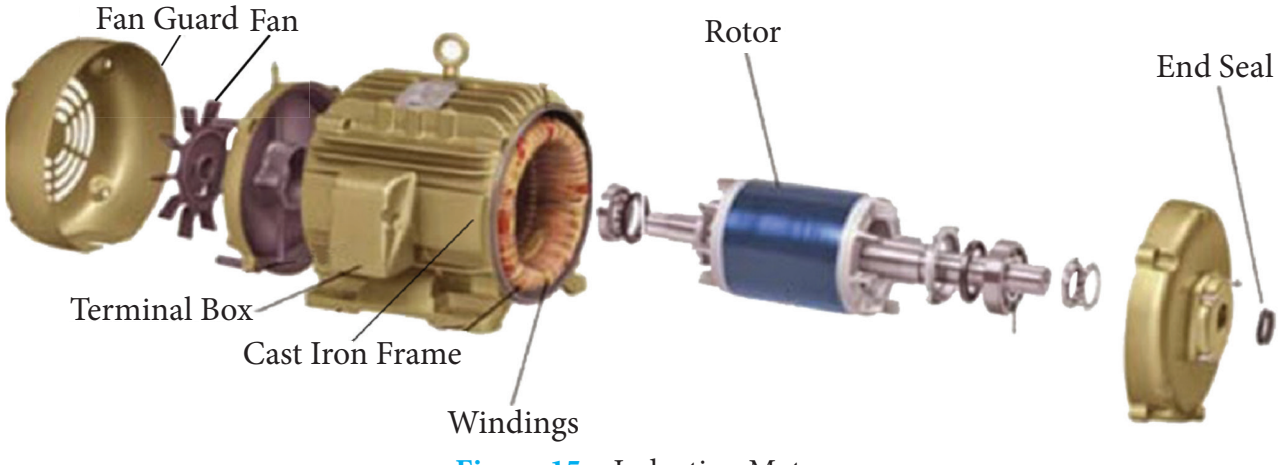

Figure 15 Induction Motor

ROTOR: The rotor is a moving component of an electromagnetic system in the electric motor. Its rotation is due to the interaction between the windings and magnetic fields which produces a torque around the rotor's axis.

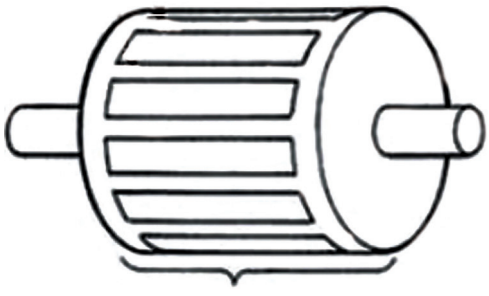

Figure 17 Rotor

10.9. INDUCTION MOTOR STARTERS

When induction motors are directly switched on to supply, it takes about five to six times of full load current. This initial excessive current causes damages to the motor and supply wires. Starters are used to limit the inrush of starting line current and full current is supplied when the motor picks up speed. It consists of protective elements like "no volt coil" and "over load relays."

10.9.1. Types of Starter for Induction Motor

There are different types of starters used for induction motor.

1. Direct-on-line starter (D.O.L) - used for 5HP or lesser motors
2. Star-delta starter used for 5HP to 15HP motors
3. Auto transformer starter used for above 15 HP motors
4. Rotor resistance starter (for slip ring motor)

GLOSSARY

1.	Voltage	மின்னழுத்தம்
2.	Resistance	மின்தடை
3.	Current	மின்னோட்டம்
4.	Electric Circuit	மின்சுற்று
5.	Series Circuit	தொடர் மின்சுற்று
6.	Parallel Circuit	பக்க மின்சுற்று
7.	Electro Magnet	மின்காந்தம்
8.	Electromagnetism	மின்காந்தவியல்
9.	Electromotive force	மின் உந்து விசை

ACTIVITIES

1. Construct Parallel and Series Circuit connection by using battery.
2. Collect resistors for the following Typical values 220Ω , 330Ω, 1K Ω, 1.1KΩ, 2KΩ, 2.4KΩ, 2.7KΩ

QUESTIONS

PART A

I. Choose the correct option:

1. The unit of current is
   a. Volt b. Watt
   c. Ampere d. Ohm

2. The unit of voltage is
   a. Watt b. Weber
   c. Volt d. Gilbert

3. The unit of resistance is
   a. Meter b. Ohm
   a. Watt hour b. Coulomb

4. The unit of power is
   a. Volt b. Ampere
   c. Watt d. Ohm

5. The frequency of A.C current is
   a. 50 c/sec b. Volt
   c. Coulomb d. Meter

6. The device is used to convert electrical energy into mechanical energy
   a. Generator
   b. Electric motor
   c. Starter
   d. Transformer

7. Starter used for motors of capacity up to 5HP is
   a. Star-delta starter
   b. Direct-on-line starter
   c. Auto transformed starter
   d. Rotor resistance starter

PART: B

II. Answer the following questions in one or two sentences:

8. What is electric current?
9. What do you mean by Electric resistance?
10. State ohm's law.
11. State Faraday's first law.
12. State Faraday's second law.
13. List out the types of electrical motors.
14. What are the types of starters used in induction motors?
15. What are the safety devices fitted in starters to protect the induction motors?
16. What is the need of a starter in an electric motor?

PART: C

III Answer the following questions in about a page?

17. Compare D.C with A.C.
18. Explain Flemming's Right Hand Rule with illustration.
19. Explain Flemming's Left Hand Rule with illustration.

PART: D

IV. Answer the following questions in detail:

20. Explain the Series circuit and Parallel circuit with neat sketch
21. Explain the principle and construction of induction motor with neat sketch.

MODEL QUESTION PAPER

BASIC MECHANICAL ENGINEERING

Time: 2.30 hours **Marks : 90**

PART A

Choose the correct answer **15×1=15**

1. The person who manufactures different parts is
   a) Supervisor b) Machinist c) Manager d) Proprietor
2. First Aid is
   a) A manufacturing process.
   b) Safety regarding operators.
   c) Immediate treatment given at the spot of accidents.
   d) Breakdown of machines.
3. Angular lines are drawn and measured with
   a) Divider b) Protractor c) Compasses d) Tee square
4. Top view is obtained on
   a) Vertical plane b) Horizontal plane c) Profile plane d) Auxiliary plane
5. This function helps in aligning the lines by
   a) OSNAP b) RIGHTALIGN c) ORTHO d) XALIGN
6. The least count of a vernier caliper is
   a) 0.01 mm b) 0.02 mm c) 0.001 mm d) 0.1 m
7. Anvil and thimble are found in this measuring instrument
   a) Vernier Caliper b) Vernier Height Gauge
   c) Micrometer d) Combination Set
8. Which material has brittleness property?
   a) Steel b) Copper c) Cast Iron d) Aluminium
9. The Atomic Number of Aluminium is
   a) 10 b) 12 c) 13 d) 15
10. The purpose of tempering is
    a) to improve corrosion resistance. b) to increase the hardness of the metal.
    c) to decrease the brittleness. d) to improve machinability.

11. The washer is generally specified by its
    a) Outer Diameter b) Hole Diameter c) Thickness d) Mean Diameter
12. keys are made of
    a) Tungsten b) Steel c) Cast Iron d) Lead
13. If the size of the shaft is smaller than the hole size, the system of fits is
    a) Interference Fit b) Clearance Fit c) Driving Fit d) Push Fit
14. Power is transmitted between shafts at moderate distance by
    a) Belt Drive b) Gear Drive c) Chain Drive d) Friction Drive
15. The unit current is
    a) Volt b) Watt c) Ampere d) Ohm

PART B

Answer any ten questions in not exceeding four lines: **10 × 3 = 30**

16. Who is Machinist?
17. Name five types of files in accordance with the "grade".
18. What are the grade of gauges?
19. What is positive Error in Micrometer ?
20. What are the three kinds of carbon steels?
21. Define "Heat treatment".
22. What are the types of moulding box?
23. What are the types of belt drive?
24. State ohm's law.
25. What is third angle projection?
26. What is a sectional view?
27. What does ISO refer to?
28. Compare OSNAP and ORTHOMODE function of AutoCAD.

PART C

Answer the following questions in about a page. **5 × 5 = 25**

29. Write down the types of vice, its mounting type and uses?
30. A main scale of Vernier caliper is marked in millimeter the Vernier scale
    a) Divisions which is equal to 49 divitions in the main scale what is the least count of that Vernier caliper?
31. Explain the different kinds of Tool Steel.
32. Draw a simple gear and explain.
33. Compare D.C with A.C
34. What are the important dimensions of key?
35. What are the information's to be furnished in a title block?

PART D

Answer the following questions in details. **2×10=20**

36. (a). What are the safety precautions regarding operators?

(or)

(b). Draw the Vernier Caliper and explain about it?

37. (a). Draw and explain the sintering Furnace.

(or)

38. (b).

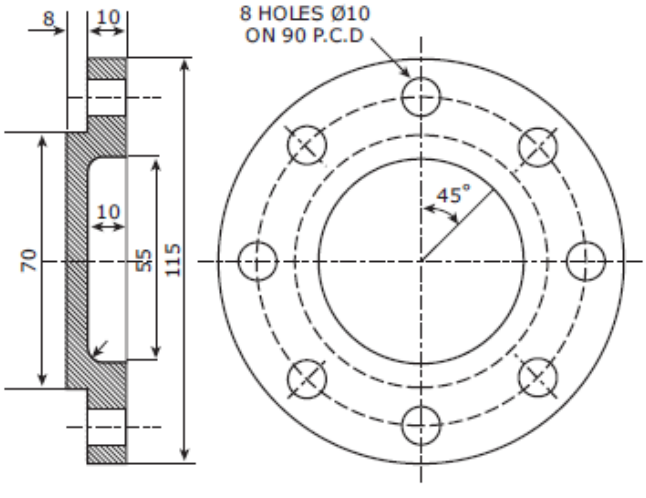

a. What is the pitch circle diameter?
b. How many holes are there in the part?
c. What is the outer diameter of the part?
d. What is the thickness of the part?
e. What is the angle between two adjacent holes?

REFERENCE BOOKS

1. "A Textbook of Machine Design" by R.S. Khurmi and J.K. Gupta S.CHAND Publishers Reprint 2016. (Twice)
2. "Elements of workshop Technology" by S.K.Hajra Choudhury and A.K. Hajra Choudhury and Nirjhar Roy Media Promoters & Publishers pvt. Ltd, Reprint – 2014. Heat Treatment
3. T. V. Rajan, C.P. Sharma, Ashok Sharma Machinist – 1st year (Key for Wallcharts)
4. Director General of Employment and Training, Minister of Labour Govt. of India CIMI – Central Instructional Media Institute, Chennai – Indo – German Project.
5. NIMI – National Instructional Media Institute Chennai
6. "Accident Prevention Manual for Industrial Operations" , N.S.C.Chicago, 1982.
7. Blake R.B.,"Industrial Safety" Prentice Hall, Inc., New Jersey, 1973.
8. Dan Petersen, " Technique of Safety Management" , McGraw – Hill Company, Tokyo, 1981.
9. Heinrich H.W. "Industrial Accident Prevention "McGraw – Hill Company, New York, 1980.
10. John Ridley, "Safety at Work", Butterworth and Co., London, 1983.
11. Jayal A.K, "Instrumentation and Mechanical Measurements", Galgotia Publications , 2000.
12. Beckwith, Marangoni, Lienhard, "Mechanical Measurements", Pearson Education, 2006.

WEBLINKS

1.1 Industrial Safety – https://www.youtube.com/watch?v=CJMirmZSGiw

1.2 Industrial First Aid – https://www.youtube.com/watch?v=idjGAW1cpzM

2.1 Hand Tools – https://www.google.co.in/search?q=hand+tools&hl=en-IN&gbv=2&pr md=ivnspb&source=lnms&tbm=isch&sa=X&ved=0ahUKEwiDjsfFk4nZAhUMPY8KHctaD-0Q_AUIBQ

3.1 Measuring Instruments – https://www.google.co.in/search?q=measuring+instruments+in+workshop&source=lnms&tbm=isch&sa=X&ved=0ahUKEwilvKyQlInZAhWF6Y8KHaQoAmcQ_AUICigB&biw=1366&bih=654

3.2 Measuring Gauges – https://www.marineinsight.com/tech/different-types-of-mechanical-measuring-tools-and-gauges-used-on-ships/

4.1 Engineering Material – https://www.google.co.in/search?q=engineering+materials&source=lnms&tbm=isch&sa=X&ved=0ahUKEwjW3ayOlYnZAhVFtI8KHftFB5gQ_AUICygC&biw=1366&bih=654

5.1 Heat Treatment – https://www.google.co.in/search?q=pack+carburizing&source=lnms&tbm=isch&

6.1 Foundry – https://en.wikipedia.org/wiki/Foundry

6.2 Moulding Process – https://en.wikipedia.org/wiki/Molding_(process)

7.1 Fasteners – https://en.wikipedia.org/wiki/Fastener

7.2 Jigs and Fixtures – https://www.youtube.com/watch?v=CA3GnfImGmw

8.1 Standardization – https://en.wikipedia.org/wiki/Standardization

8.2 Fits and Tolerance – http://www.cobanengineering.com/Tolerances/ISOHoleandShaftBAsisLimitsAndFits.asp

9.1 Belt Drive – https://www.youtube.com/watch?v=LVro9AMkPAU

9.2 Gear Drive – https://www.youtube.com/watch?v=N6kI1CBG24o

10.1 Electricity – https://www.youtube.com/watch?v=D2monVkCkX4

11.1 Industrial Management – https://en.wikipedia.org/wiki/Industrial_management

11.2 Electrical Motor – https://www.youtube.com/watch?v=LAtPHANEfQo

12.1 Cost Estimation – https://en.wikipedia.org/wiki/Cost_estimate

Basic Mechanical Engineering

PRACTICAL

PART – I - ENGINEERING DRAWING PRACTICAL

PART – II - AUTOCAD SOFTWARE DRAWING PRACTICAL

BME_English_Practicals_2022.indd 143 25-01-2023 15:12:51

CONTENTS

PRACTICAL - I ENGINEERING DRAWING PRACTICAL

1. Lettering And Numbering

2. Draw the Orthographic Projections From Isometric Drawing 1

3. Draw the Orthographic Projections From Isometric Drawing 2

4. Draw the Orthographic Projections From Isometric Drawing 3

5. Draw the Orthographic Projections From Isometric Drawing 4

6. Draw the Orthographic Projections From Isometric Drawing 5

7. Draw the Isometric View From Orthographic Projectons Drawing 1

8. Draw the Isometric View From Orthographic Projectons Drawing 2

9. Draw the Isometric View From Orthographic Projectons Drawing 3

10 Draw the Isometric View From Orthographic Projectons Drawing 4

11 Draw the Isometric View From Orthographic Projectons Drawing 5

12 Draw the Sectional View of Given Isometric Projectons Drawing 1

13. Draw the Sectional View of Given Isometric Projectons Drawing 2

Practical - II AUTOCAD SOFTWARE DRAWING PRACTICAL

14 Representation of Given 2D Figure Using Autocad Software

15. Representation of 2D true shape of the cut section of 3D object using AUTOCAD software

16. Representation of given 2D figure using AUTOCAD software – 1

17 Representation of given 2D figure using AUTOCAD software – 2.

18 Draw the Orthographic Projection of the figure given below using AUTOCAD software

19. Draw the Orthographic Projection of the figure given below using AUTOCAD software:

20 Representation of 2D true shape of the cut section of 3D object using AUTOCAD software

BME_English_Practicals_2022.indd 144 25-01-2023 15:12:51

PRACTICAL - I

ENGINEERING DRAWING PRACTICAL

LETTERING AND NUMBERING 1

OBJECTIVE:

To write the letters and numbers according to engineering drawing standards.

Operations covered under the project:

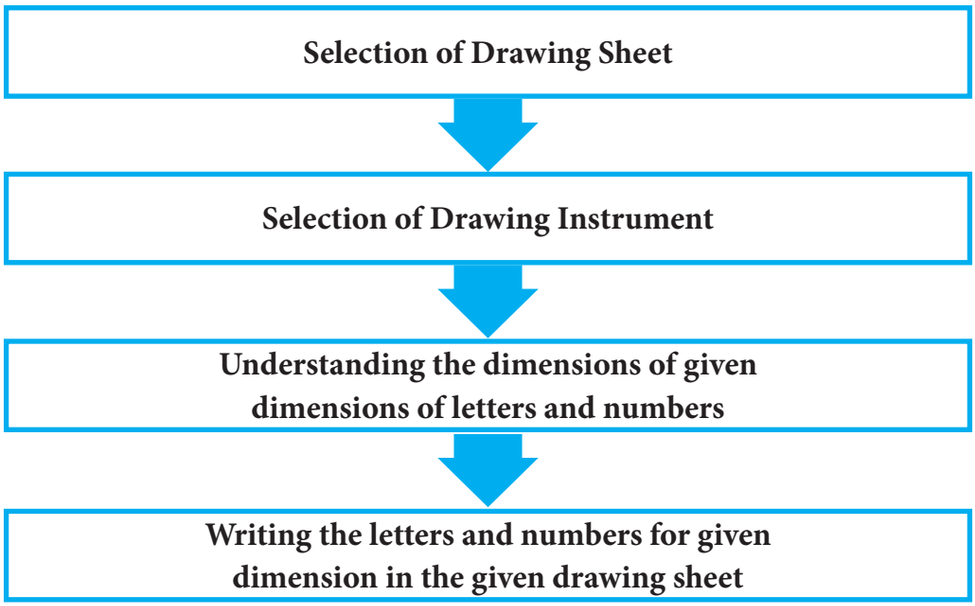

Instruments Required

Section/ Activity Title	S.No	Name of the tools/ equipment	Range/Value	Quantity
Materials Required	1.	Drawing board	D2 Size	01 No
	2.	Drafter	Mini	01 No
	3.	Pencils and pencil leads	H, 2H, HB	01 No
	4.	Scales	1 Feet	01 No
	5.	Protractor		01 No
	6.	Instrument Box		01 No
	7.	Drawing sheets	A2	01 No
	8.	French curves		01 No

BME_English_Practicals_2022.indd 146 25-01-2023 15:12:51

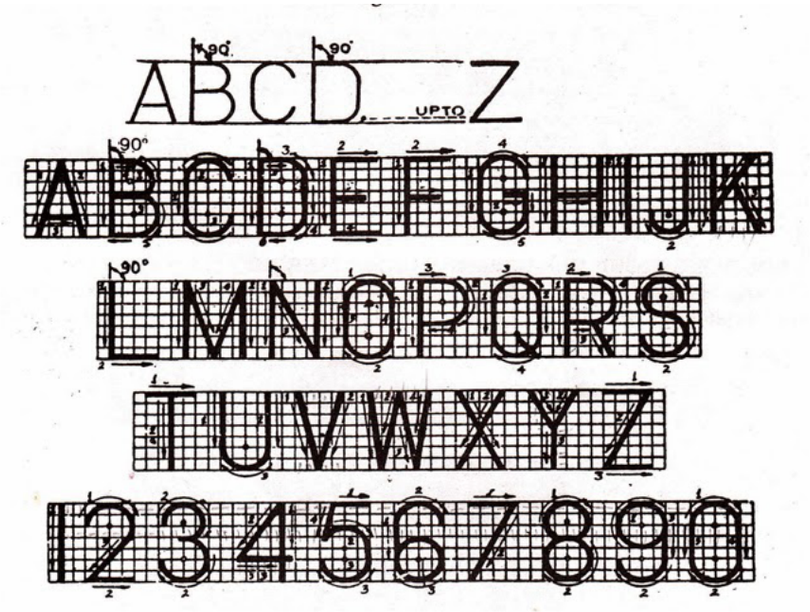

Procedure:

Step 1: Choose the correct size of the drawing sheet to draw the letters and numbers.

Step 2: Select the suitable drawing instrument and materials.

Step 3: Fix the drawing sheet on the drawing board by writing the drawing pins or clips.

Step 4: Fix the mini drafter on the drawing board at correct position.

Step 5: Draw the boarder lines on the four sides of the drawing sheets and draw title block on the drawing.

Step 6: Draw the horizontal and vertical lines at appropriate dimensions required to write the letters and numbers.

Step 7: Draw the letters (vertical and inclined) at the appropriate column at regular gapes.

Step 8: Draw the numbers (only vertical position) at the appropriate column at regular gapes.

Step 9: Draw the letters and number thick position by using HB grade of the pencil.

Step 10: Finally fold the drawing sheet in correct position.

CONCLUSION

Thus the letters and numbers according to engineering drawing standards has written.

BME_English_Practicals_2022.indd 147 25-01-2023 15:12:51

Video Suggestions

S.NO	TITLE / PURPOSE	LINK
1	Lettering and numbering	https://youtu.be/ST75fYk4QpY

Simple assessment

1. The ratio between the height and width of the letter and number is _____
2. The dimension of the drawing head is _____
3. The name of writing the letters at sequence of thickness is _____
4. The angle of the inclined letter is _____

Answer key

1. 7:4 or 7:5
2. 6 or 8 mm
3. Gothic letters
4. 75°

Student project	To draw the another type of lettering and numbering
Guest lecture suggestions	Give the lecture about how to draw the letters and numbers by engineering college lecture and draughtsman from industries
Industrial / field visit suggestions	To make arrangement to visit institution / industries where there use of letters and numbers

BME_English_Practicals_2022.indd 148 25-01-2023 15:12:51

DRAW THE ORTHOGRAPHIC PROJECTIONS FROM ISOMETRIC 2

DRAWING- 1

OBJECTIVE:

To draw the three views of orthographic projection [Elevation, plan, and end view] from the given isometric view of the object.

Operations covered under the project:

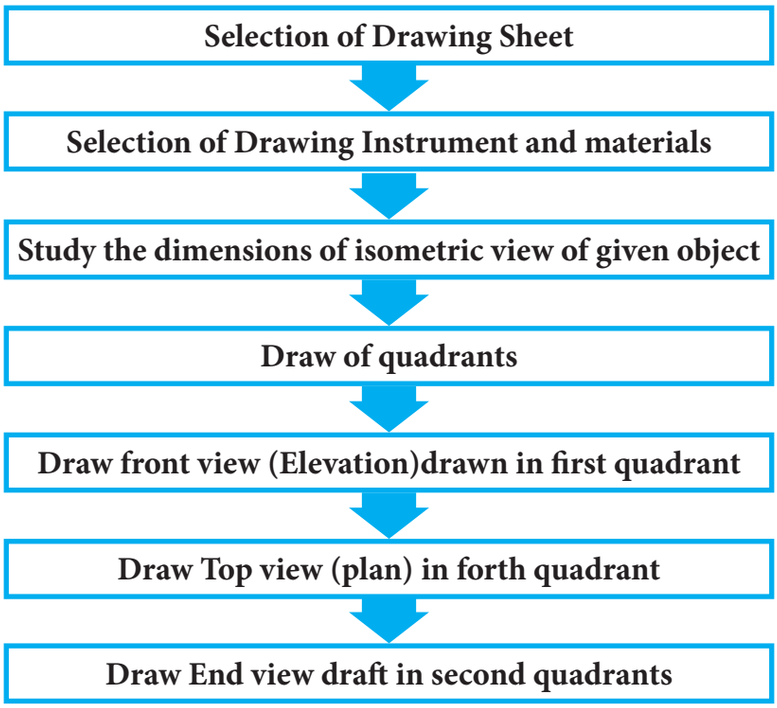

Instruments Required

Section/ Activity Title	S.No	Name of the tools/ equipment	Range/Value	Quantity
Materials Required	1.	Drawing board	D2 Size	01 No
	2.	Drafter	Mini	01 No
	3.	Pencils and pencil leads	H, 2H, HB	01 No
	4.	Scales	1 Feet	01 No
	5.	Protractor		01 No
	6.	Instrument Box		01 No
	7.	Drawing sheets	A2	01 No
	8.	French curves		01 No

BME_English_Practicals_2022.indd 149 25-01-2023 15:12:52

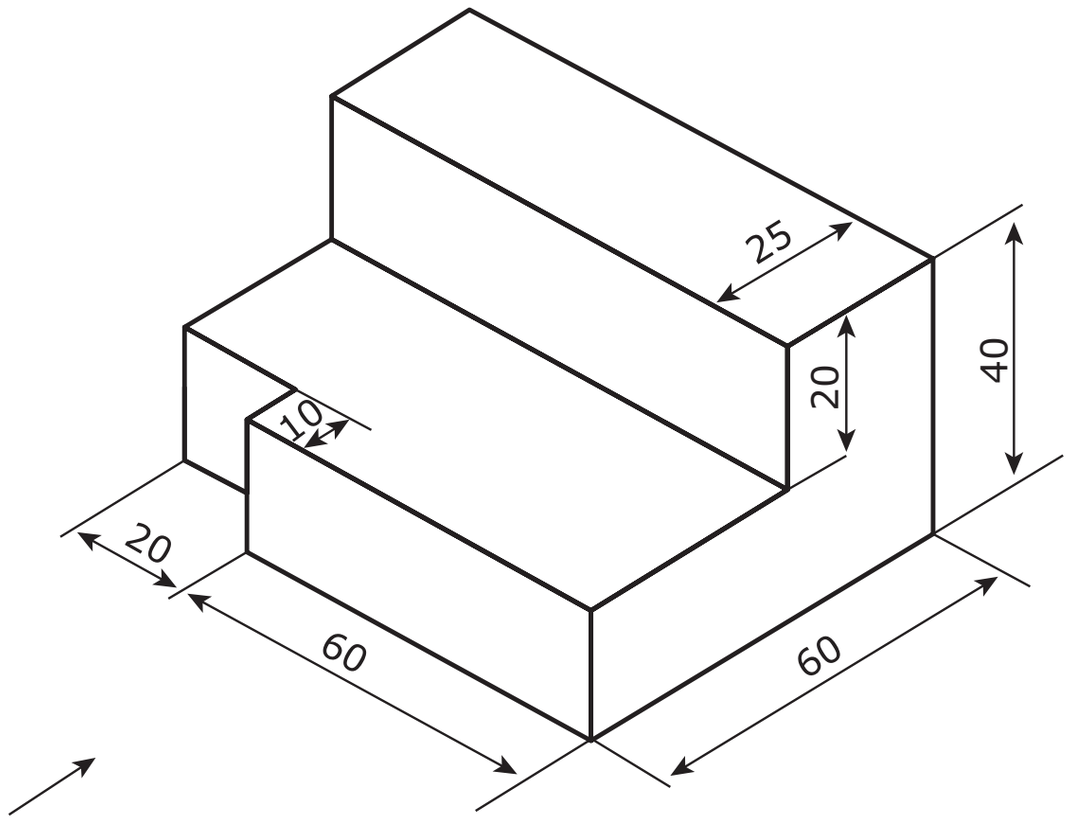

Procedure:

Step 1: First study the dimensions of the given isometric view. (length and height of the object)

Step 2: Choose the front view according to the arrow mark given in the figure.

Step 3: Draw four quadrants at 90° each, in such way the top right would be 1st immediate adjacent would be the 2nd, the immediate bottom would be the 3rd and the immediate adjacent would be the 4th.

Step 4: Draw the visible features of the front view in the first quadrants position according to the dimension of the given isometric view of an object.

Step 5: Draw projectors off the front view horizontally and vertically in order to create the boundaries for the top and right side views

Step 6: Draw the top and right side views in fourth and second quadrant position in the drawing sheet as per the dimension referred in the given isometric view.

Step 7: Finally fold the drawing sheet correct in position.

BME_English_Practicals_2022.indd 150 25-01-2023 15:12:52

CONCLUSION

Thus the orthographic projection views are drawn from the given isometric view of the object.

Video Suggestions

S.NO	TITLE / PURPOSE	LINK
1	Isometric to orthographic projection	https://youtu.be/C0FiimqkLBo

Simple assessment

1. The angle of each quadrants is _____
2. The front view is drawn in the _____quadrant in first angle projection
3. The length and height of the figure in front view is _____
4. The length of the top view is _____
5. The length of the side view is _____

Answer key

1. 90°
2. First
3. 80mm and 40mm
4. 60mm
5. 60mm

BME_English_Practicals_2022.indd 151 25-01-2023 15:12:52

DRAW THE ORTHOGRAPHIC PROJECTIONS FROM ISOMETRIC 3

DRAWING- 2

OBJECTIVE:

To draw the three views of orthographic projection [Elevation, plan, and end view] from the given isometric view of the object.

Operations covered under the project:

Selection of Drawing Sheet

↓

Selection of Drawing Instrument and materials

↓

Study the dimensions of isometric view of given object

↓

Draw of quadrants

↓

Draw front view (Elevation)drawn in first quadrant

↓

Draw Top view (plan) in forth quadrant

↓

Draw End view draft in second quadrants

Section/ Activity Title	S.No	Name of the tools/ equipment	Range/Value	Quantity
Materials Required	1.	Drawing board	D2 Size	01 No
	2.	Drafter	Mini	01 No
	3.	Pencils and pencil leads	H, 2H, HB	01 No
	4.	Scales	1 Feet	01 No
	5.	Protractor		01 No
	6.	Instrument Box		01 No
	7.	Drawing sheets	A2	01 No
	8.	French curves		01 No

BME_English_Practicals_2022.indd 152 25-01-2023 15:12:52

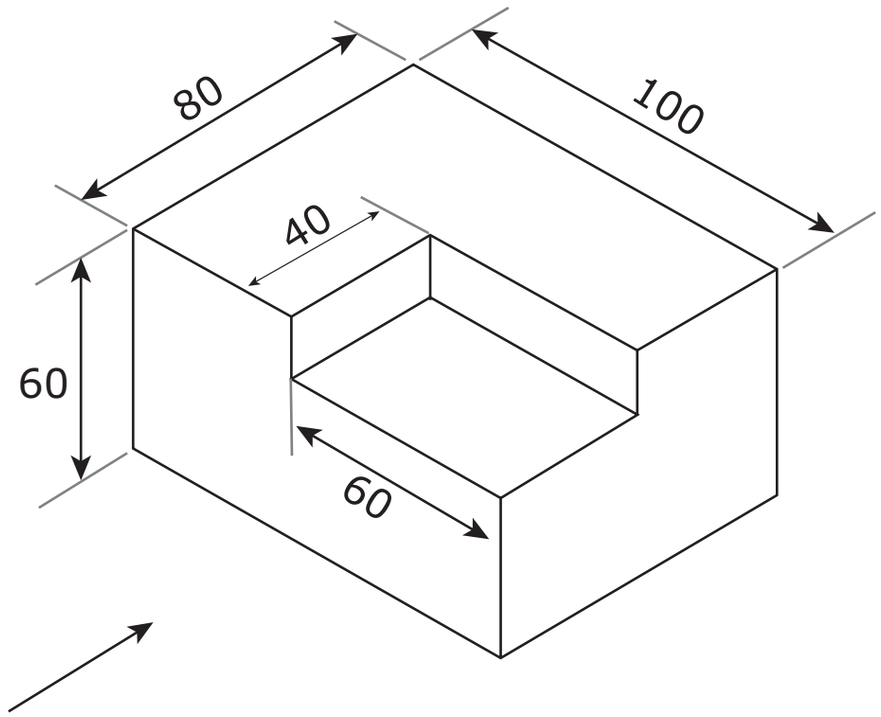

Procedure:

Step 1: First study the dimensions of the given isometric view. (length and height of the object)

Step 2: Choose the front view according to the arrow mark given in the figure.

Step 3: Draw four quadrants at 90° each, in such way the top right would be 1st immediate adjacent would be the 2nd, the immediate bottom would be the 3rd and the immediate adjacent would be the 4th.

Step 4: Draw the visible features of the front view in the first quadrants position according to the dimension of the given isometric view of an object.

Step 5: Draw projectors off the front view horizontally and vertically in order to create the boundaries for the top and right side views

Step 6: Draw the top and right side views in fourth and second quadrant position in the drawing sheet as per the dimension referred in the given isometric view.

Step 7: Finally fold the drawing sheet correct in position.

CONCLUSION

Thus the orthographic projection views are drawn from the given isometric view of the object.

Video Suggestions

S.NO	TITLE / PURPOSE	LINK
1	Isometric to orthographic projection	https://youtu.be/C0FiimqkLBo

BME_English_Practicals_2022.indd 153 25-01-2023 15:12:52

DRAW THE ORTHOGRAPHIC PROJECTIONS FROM ISOMETRIC 4

DRAWING- 3

OBJECTIVE:

To draw the three views of orthographic projection [Elevation, plan, and end view] from the given isometric view of the object.

Operations covered under the project:

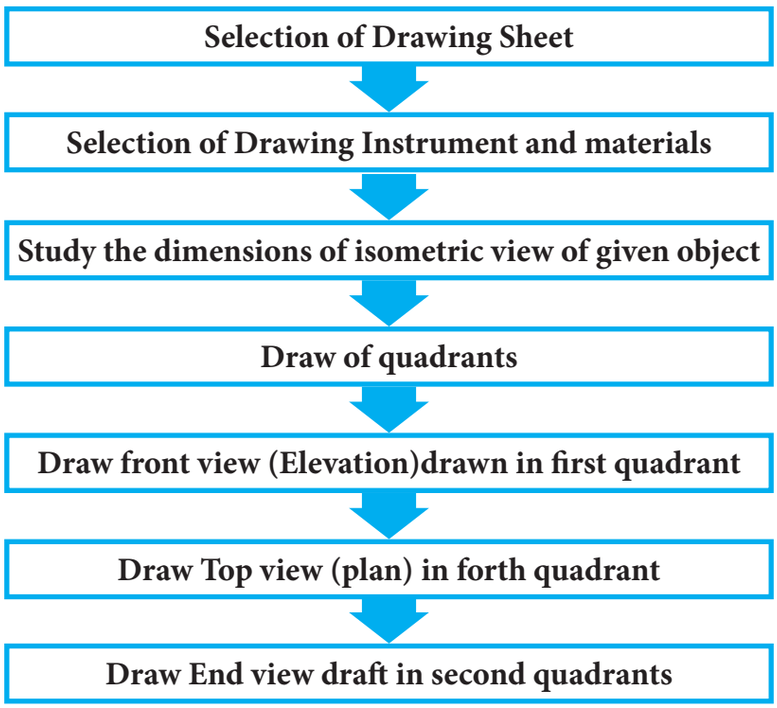

Section/ Activity Title	S.No	Name of the tools/ equipment	Range/Value	Quantity
Materials Required	1.	Drawing board	D2 Size	01 No
	2.	Drafter	Mini	01 No
	3.	Pencils and pencil leads	H, 2H, HB	01 No
	4.	Scales	1 Feet	01 No
	5.	Protractor		01 No
	6.	Instrument Box		01 No
	7.	Drawing sheets	A2	01 No
	8.	French curves		01 No

BME_English_Practicals_2022.indd 154 25-01-2023 15:12:52

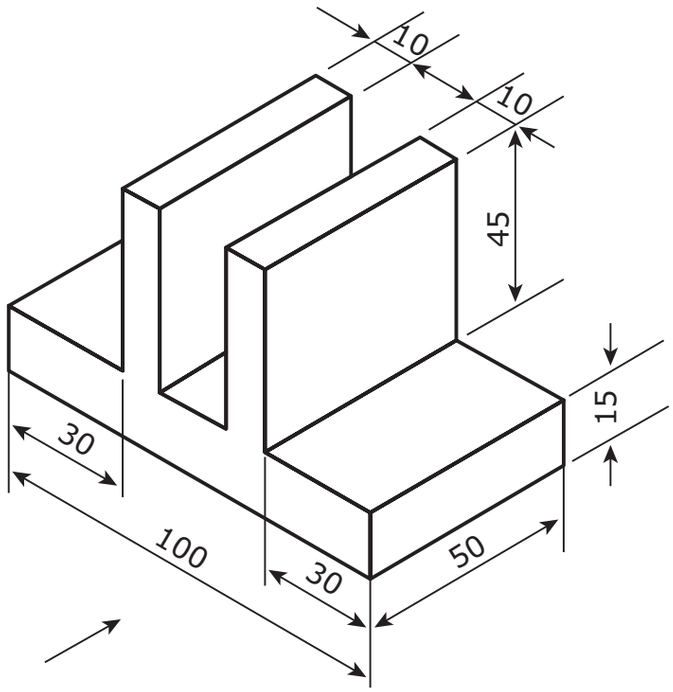

Procedure:

Step 1: First study the dimensions of the given isometric view. (length and height of the object)

Step 2: Choose the front view according to the arrow mark given in the figure.

Step 3: Draw four quadrants at 90° each, in such way the top right would be 1st immediate adjacent would be the 2nd, the immediate bottom would be the 3rd and the immediate adjacent would be the 4th.

Step 4: Draw the visible features of the front view in the first quadrants position according to the dimension of the given isometric view of an object.

Step 5: Draw projectors off the front view horizontally and vertically in order to create the boundaries for the top and right side views

Step 6: Draw the top and right side views in fourth and second quadrant position in the drawing sheet as per the dimension referred in the given isometric view.

Step 7: Finally fold the drawing sheet correct in position.

CONCLUSION

Thus the orthographic projection views are drawn from the given isometric view of the object.

Video Suggestions

S.NO	TITLE / PURPOSE	LINK
1	Isometric to orthographic projection	https://youtu.be/C0FiimqkLBo

BME_English_Practicals_2022.indd 155 25-01-2023 15:12:52

DRAW THE ORTHOGRAPHIC PROJECTIONS FROM ISOMETRIC 5

DRAWING- 4

OBJECTIVE:

To draw the three views of orthographic projection [Elevation, plan, and end view] from the given isometric view of the object.

Operations covered under the project:

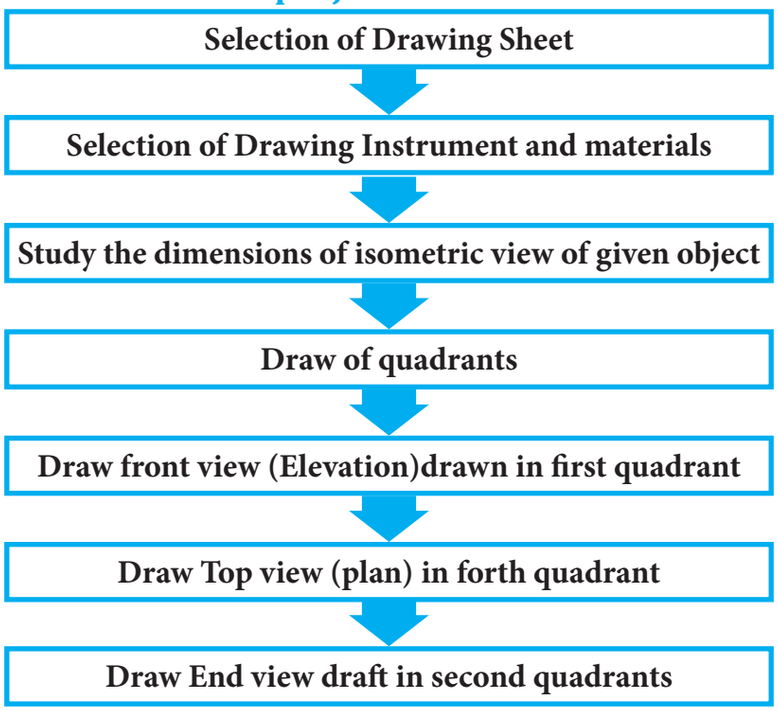

Section/ Activity Title	S.No	Name of the tools/ equipment	Range/Value	Quantity
Materials Required	1.	Drawing board	D2 Size	01 No
	2.	Drafter	Mini	01 No
	3.	Pencils and pencil leads	H, 2H, HB	01 No
	4.	Scales	1 Feet	01 No
	5.	Protractor		01 No
	6.	Instrument Box		01 No
	7.	Drawing sheets	A2	01 No
	8.	French curves		01 No

BME_English_Practicals_2022.indd 156 25-01-2023 15:12:52

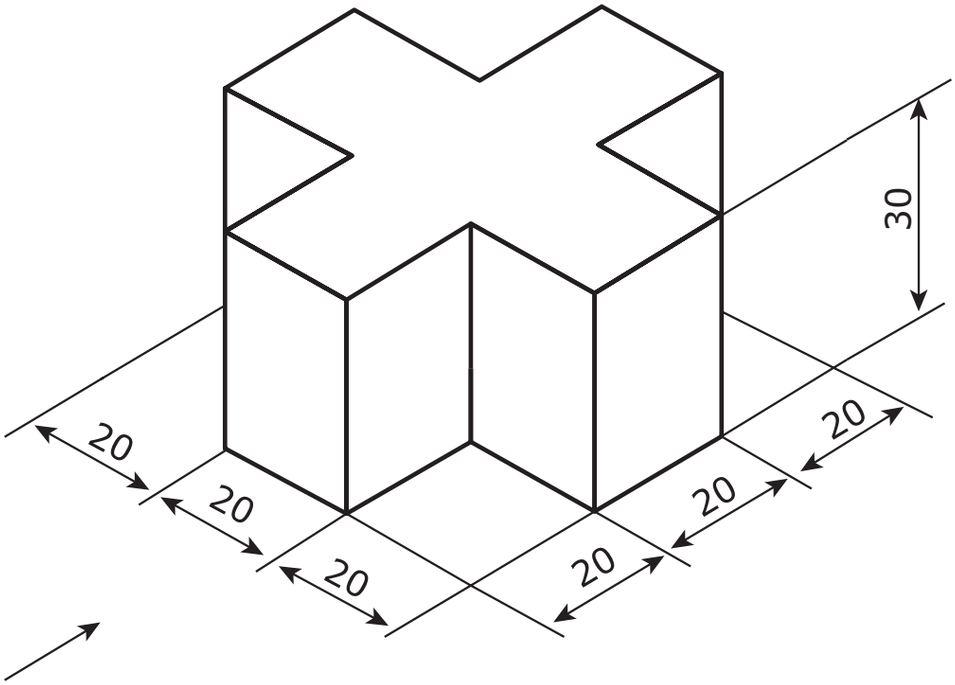

Procedure:

Step 1: First study the dimensions of the given isometric view. (length and height of the object)

Step 2: Choose the front view according to the arrow mark given in the figure.

Step 3: Draw four quadrants at 90° each, in such way the top right would be 1st immediate adjacent would be the 2nd, the immediate bottom would be the 3rd and the immediate adjacent would be the 4th.

Step 4: Draw the visible features of the front view in the first quadrants position according to the dimension of the given isometric view of an object.

Step 5: Draw projectors off the front view horizontally and vertically in order to create the boundaries for the top and right side views

Step 6: Draw the top and right side views in fourth and second quadrant position in the drawing sheet as per the dimension referred in the given isometric view.

Step 7: Finally fold the drawing sheet correct in position.

CONCLUSION

Thus the orthographic projection views are drawn from the given isometric view of the object.

Video Suggestions

S.NO	TITLE / PURPOSE	LINK
1	Isometric to orthographic projection	https://youtu.be/C0FiimqkLBo

BME_English_Practicals_2022.indd 157 25-01-2023 15:12:52

DRAW THE ORTHOGRAPHIC PROJECTIONS FROM ISOMETRIC 6

DRAWING- 5

OBJECTIVE:

To draw the three views of orthographic projection [Elevation, plan, and end view] from the given isometric view of the object.

Operations covered under the project:

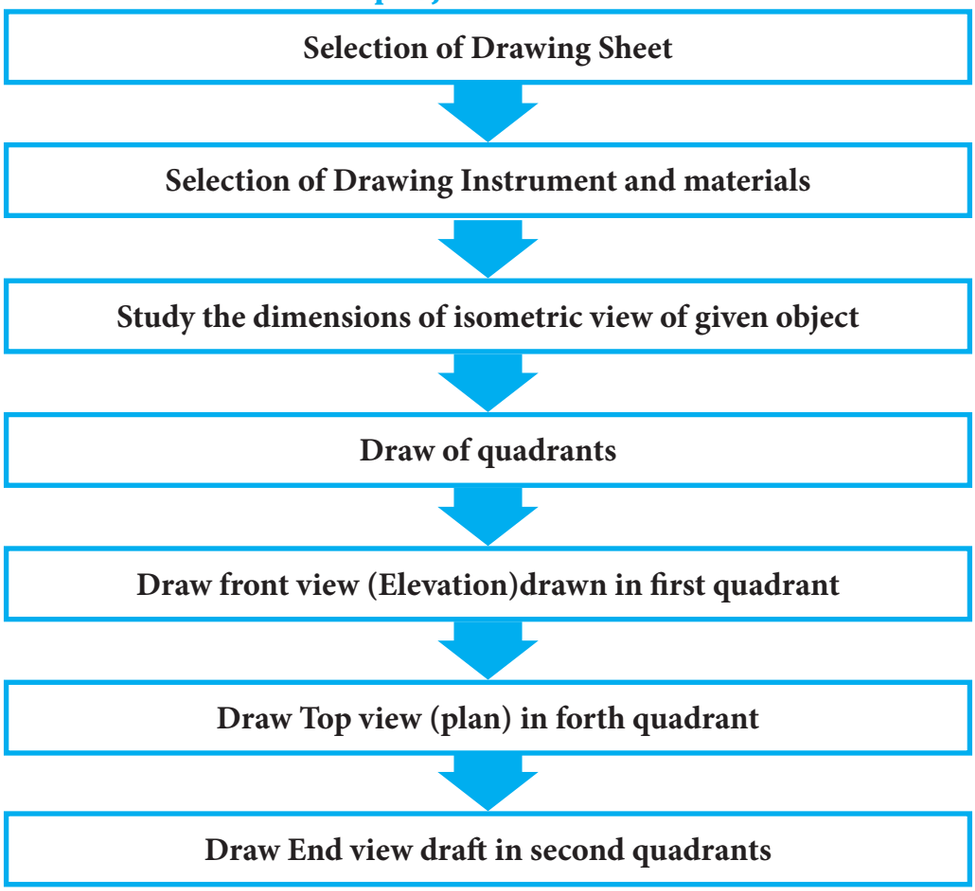

BME_English_Practicals_2022.indd 158 25-01-2023 15:12:52

Section/ Activity Title	S.No	Name of the tools/ equipment	Range/Value	Quantity
Materials Required	1.	Drawing board	D2 Size	01 No
	2.	Drafter	Mini	01 No
	3.	Pencils and pencil leads	H, 2H, HB	01 No
	4.	Scales	1 Feet	01 No
	5.	Protractor		01 No
	6.	Instrument Box		01 No
	7.	Drawing sheets	A2	01 No
	8.	French curves		01 No

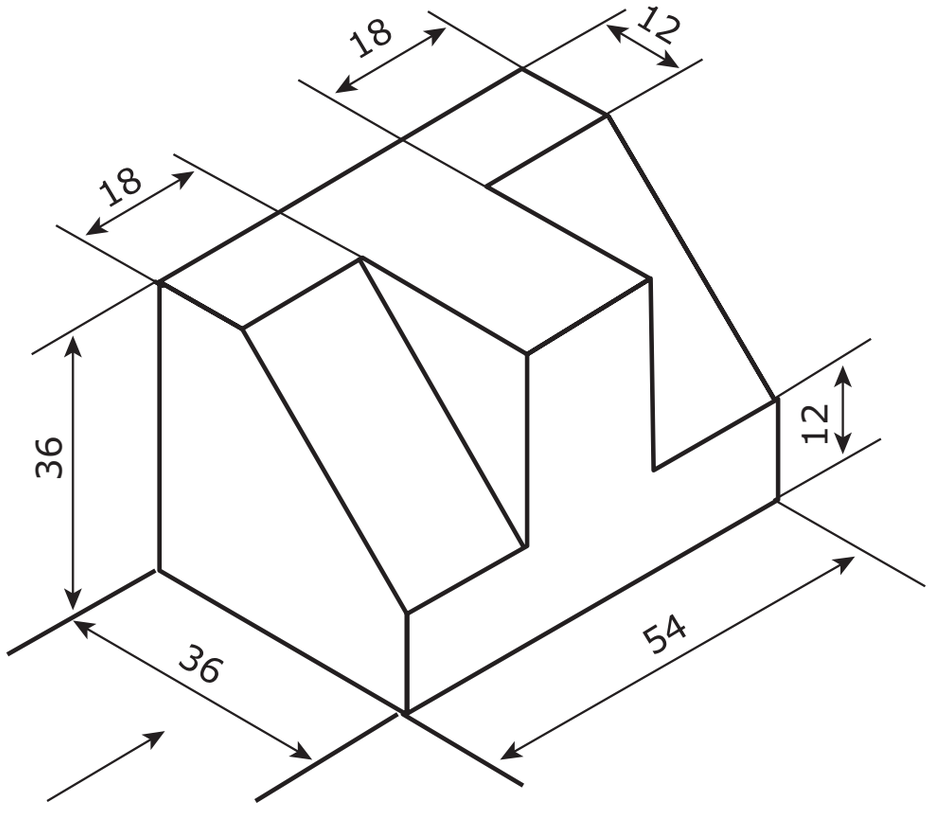

Procedure:

Step 1: First study the dimensions of the given isometric view. (length and height of the object)

Step 2: Choose the front view according to the arrow mark given in the figure.

Step 3: Draw four quadrants at 90° each, in such way the top right would be 1st immediate adjacent would be the 2nd, the immediate bottom would be the 3rd and the immediate adjacent would be the 4th.

BME_English_Practicals_2022.indd 159 25-01-2023 15:12:52

Step 4: Draw the visible features of the front view in the first quadrants position according to the dimension of the given isometric view of an object.

Step 5: Draw projectors off the front view horizontally and vertically in order to create the boundaries for the top and right side views

Step 6: Draw the top and right side views in fourth and second quadrant position in the drawing sheet as per the dimension referred in the given isometric view.

Step 7: Finally fold the drawing sheet correct in position.

CONCLUSION

Thus the orthographic projection views are drawn from the given isometric view of the object.

Video Suggestions

S.NO	TITLE / PURPOSE	LINK
1	Isometric to orthographic projection	https://youtu.be/C0FiimqkLBo

BME_English_Practicals_2022.indd 160 25-01-2023 15:12:52

DRAW THE ISOMETRIC VIEW FROM ORTHOGRAPHIC PROJECTONS 7

DRAWING- 1

OBJECTIVE:

To draw the isometric view of orthographic projection given in the figure (front view, Top view, and side view).

Operations covered under the project:

Selection of Drawing Sheet

↓

Selection of Drawing Instrument and materials

↓

Study the dimensions of orthographic projections

↓

Study the dimensions of orthographic projections

↓

Mark the dimenstion on X, Y, and Z axis

↓

Draw the isometric drawing

Section/ Activity Title	S.No	Name of the tools/ equipment	Range/Value	Quantity
Materials Required	1.	Drawing board	D2 Size	01 No
	2.	Drafter	Mini	01 No
	3.	Pencils and pencil leads	H, 2H, HB	01 No
	4.	Scales	1 Feet	01 No
	5.	Protractor		01 No
	6.	Instrument Box		01 No
	7.	Drawing sheets	A2	01 No
	8.	French curves		01 No

BME_English_Practicals_2022.indd 161 25-01-2023 15:12:52

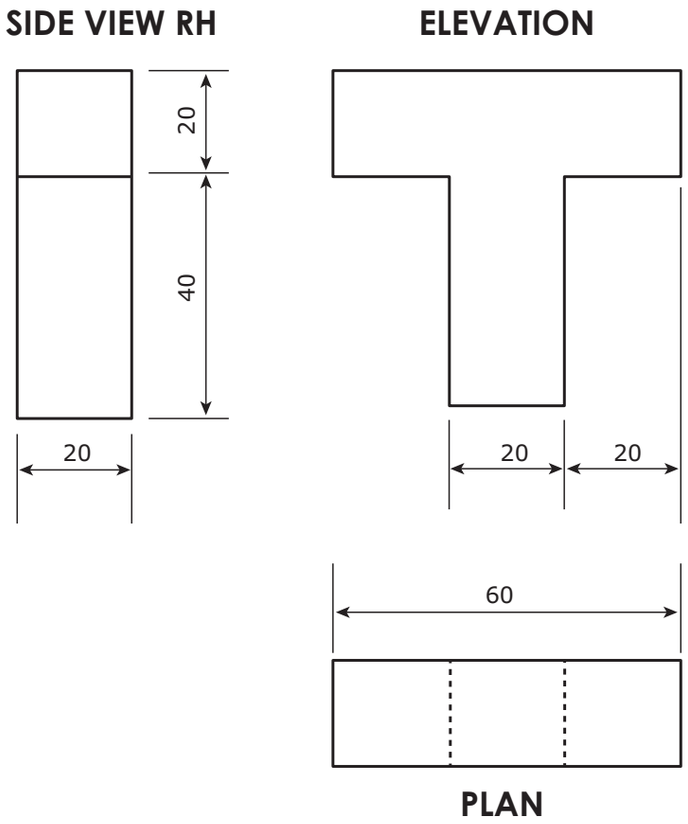

Procedure:

Step 1: Draw a horizontal straight line and make a centre point.

Step 2: From that point draw two inclined lines on both sides with 30° to the base line and from the same point draw a vertical line. [namely X, Y and Z axes]

Step 3: In that vertical line, mark the height of the object for front and end view.

Step 4: Draw the parallel lines for front and side views.

Step 5: Now we complete the isometric box.

Step 6: Mark the dimension of front, top and side views of orthographic projection in xy, xz, yz plane respectively.

Step 7: Draw the edge lines of the object darkly.

CONCLUSION

Thus the isometric view is drawn from given orthographic projections.

BME_English_Practicals_2022.indd 162 25-01-2023 15:12:53

Video Suggestions

S.NO	TITLE / PURPOSE	LINK
1	Orthographic to Isometric projection	https://youtu.be/oNQJXjNzD6k

Simple Assessment

1. The angle between three axes is _____
2. The length of the object in isometric view is _____
3. The breadth of the object in isometric view is _____
4. The height of the object in isometric view is _____

Answer key

1. 120°
2. 60mm
3. 20mm
4. 60mm

Student project	To draw the isometric view for different given orthographic projection
Guest lecture suggestions	Give the lecture about how to draw isometric view from given orthographic projections
Industrial / field visit suggestions	Not applicable

BME_English_Practicals_2022.indd 163 25-01-2023 15:12:53

DRAW THE ISOMETRIC VIEW FROM ORTHOGRAPHIC PROJECTONS 8

DRAWING- 2

OBJECTIVE:

To draw the isometric view of orthographic projection given in the figure (front view, Top view, and side view).

Operations covered under the project:

Selection of Drawing Sheet

↓

Selection of Drawing Instrument and materials

↓

Study the dimensions of orthographic projections

↓

Study the dimensions of orthographic projections

↓

Mark the dimenstion on X, Y, and Z axis

↓

Draw the isometric drawing

Section/ Activity Title	S.No	Name of the tools/ equipment	Range/Value	Quantity
Materials Required	1.	Drawing board	D2 Size	01 No
	2.	Drafter	Mini	01 No
	3.	Pencils and pencil leads	H, 2H, HB	01 No
	4.	Scales	1 Feet	01 No
	5.	Protractor		01 No
	6.	Instrument Box		01 No
	7.	Drawing sheets	A2	01 No
	8.	French curves		01 No

BME_English_Practicals_2022.indd 164 25-01-2023 15:12:53

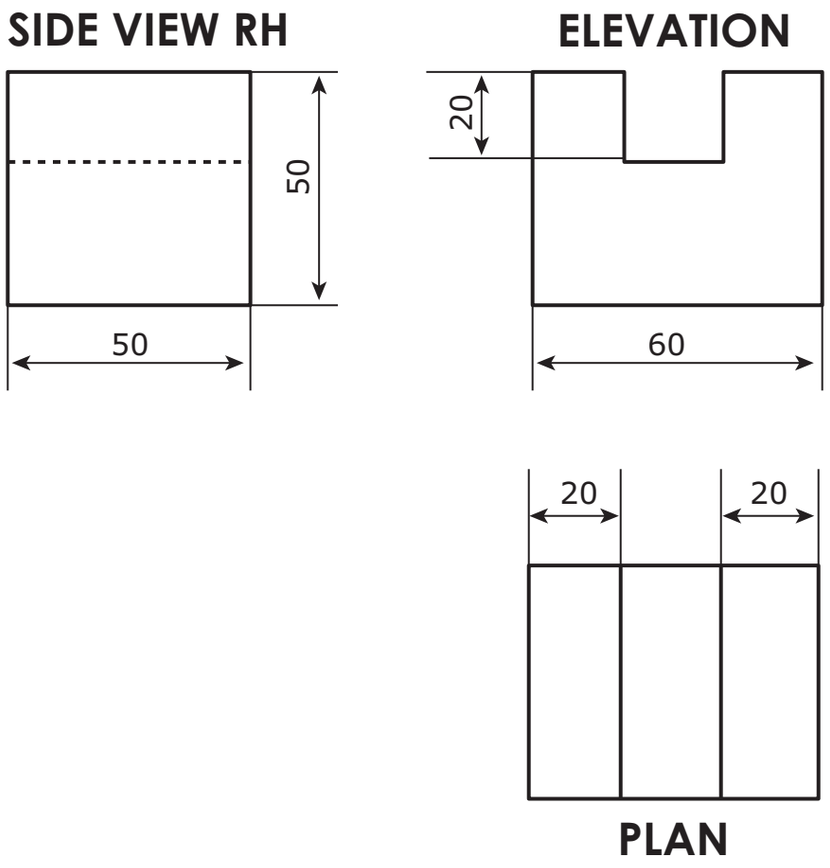

Procedure:

Step 1: Draw a horizontal straight line and make a centre point.

Step 2: From that point draw two inclined lines on both sides with 30° to the base line and from the same point draw a vertical line. [namely X, Y and Z axes]

Step 3: In that vertical line, mark the height of the object for front and end view.

Step 4: Draw the parallel lines for front and side views.

Step 5: Now we complete the isometric box.

Step 6: Mark the dimension of front, top and side views of orthographic projection in xy, xz, yz plane respectively.

Step 7: Draw the edge lines of the object darkly.

CONCLUSION

Thus the isometric view is drawn from given orthographic projections.

BME_English_Practicals_2022.indd 165 25-01-2023 15:12:53

DRAW THE ISOMETRIC VIEW FROM ORTHOGRAPHIC PROJECTONS 9

DRAWING- 3

OBJECTIVE:

To draw the isometric view of orthographic projection given in the figure (front view, Top view, and side view).

Operations covered under the project:

Selection of Drawing Sheet

↓

Selection of Drawing Instrument and materials

↓

Study the dimensions of orthographic projections

↓

Study the dimensions of orthographic projections

↓

Mark the dimenstion on X, Y, and Z axis

↓

Draw the isometric drawing

Section/ Activity Title	S.No	Name of the tools/ equipment	Range/Value	Quantity
Materials Required	1.	Drawing board	D2 Size	01 No
	2.	Drafter	Mini	01 No
	3.	Pencils and pencil leads	H, 2H, HB	01 No
	4.	Scales	1 Feet	01 No
	5.	Protractor		01 No
	6.	Instrument Box		01 No
	7.	Drawing sheets	A2	01 No
	8.	French curves		01 No

BME_English_Practicals_2022.indd 166 25-01-2023 15:12:53

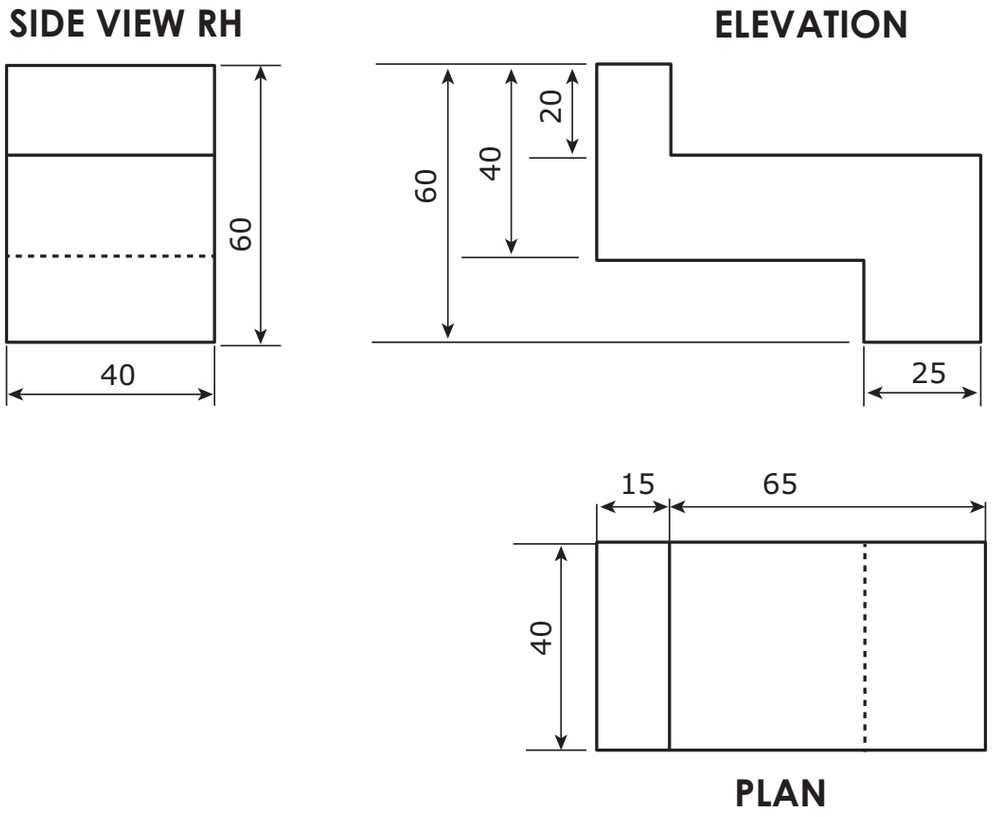

Procedure:

Step 1: Draw a horizontal straight line and make a centre point.

Step 2: From that point draw two inclined lines on both sides with 30° to the base line and from the same point draw a vertical line. [namely X, Y and Z axes]

Step 3: In that vertical line, mark the height of the object for front and end view.

Step 4: Draw the parallel lines for front and side views.

Step 5: Now we complete the isometric box.

Step 6: Mark the dimension of front, top and side views of orthographic projection in xy, xz, yz plane respectively.

Step 7: Draw the edge lines of the object darkly.

CONCLUSION

Thus the isometric view is drawn from given orthographic projections.

BME_English_Practicals_2022.indd 167 25-01-2023 15:12:53

DRAW THE ISOMETRIC VIEW FROM ORTHOGRAPHIC PROJECTONS 10

DRAWING- 4

OBJECTIVE:

To draw the isometric view of orthographic projection given in the figure (front view, Top view, and side view).

Operations covered under the project:

Selection of Drawing Sheet

↓

Selection of Drawing Instrument and materials

↓

Study the dimensions of orthographic projections

↓

Study the dimensions of orthographic projections

↓

Mark the dimenstion on X, Y, and Z axis

↓

Draw the isometric drawing

Section/ Activity Title	S.No	Name of the tools/ equipment	Range/Value	Quantity
Materials Required	1.	Drawing board	D2 Size	01 No
	2.	Drafter	Mini	01 No
	3.	Pencils and pencil leads	H, 2H, HB	01 No
	4.	Scales	1 Feet	01 No
	5.	Protractor		01 No
	6.	Instrument Box		01 No
	7.	Drawing sheets	A2	01 No
	8.	French curves		01 No

BME_English_Practicals_2022.indd 168 25-01-2023 15:12:53

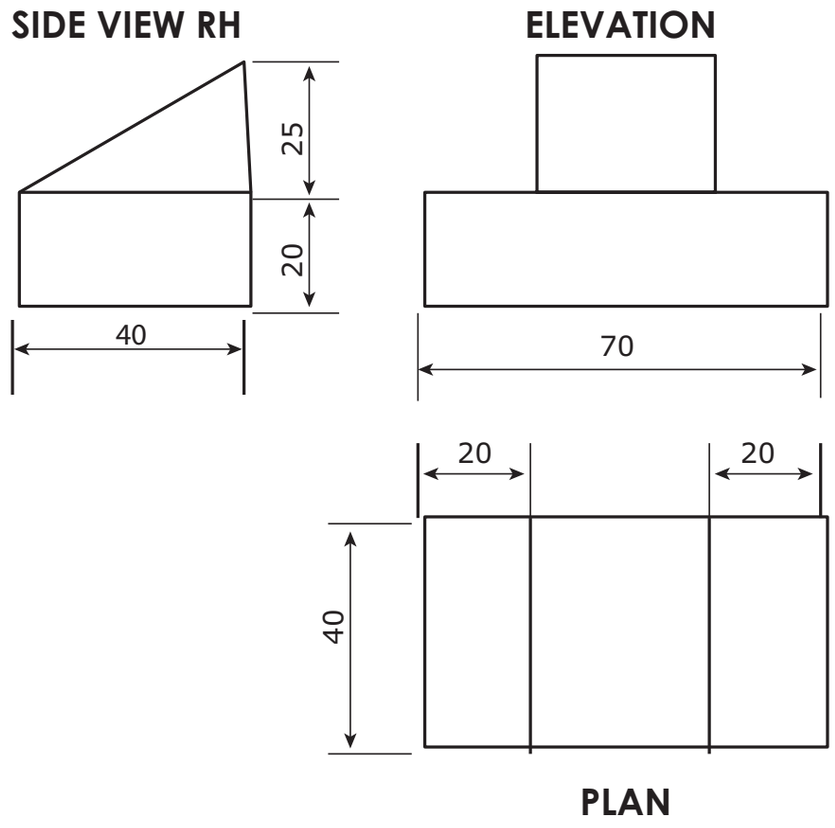

Procedure:

Step 1: Draw a horizontal straight line and make a centre point.

Step 2: From that point draw two inclined lines on both sides with 30° to the base line and from the same point draw a vertical line. [namely X, Y and Z axes]

Step 3: In that vertical line, mark the height of the object for front and end view.

Step 4: Draw the parallel lines for front and side views.

Step 5: Now we complete the isometric box.

Step 6: Mark the dimension of front, top and side views of orthographic projection in xy, xz, yz plane respectively.

Step 7: Draw the edge lines of the object darkly.

CONCLUSION

Thus the isometric view is drawn from given orthographic projections.

BME_English_Practicals_2022.indd 169 25-01-2023 15:12:53

DRAW THE ISOMETRIC VIEW FROM ORTHOGRAPHIC PROJECTONS 11

DRAWING- 5

OBJECTIVE:

To draw the isometric view of orthographic projection given in the figure (front view, Top view, and side view).

Operations covered under the project:

Selection of Drawing Sheet

↓

Selection of Drawing Instrument and materials

↓

Study the dimensions of orthographic projections

↓

Study the dimensions of orthographic projections

↓

Mark the dimenstion on X, Y, and Z axis

↓

Draw the isometric drawing

Section/ Activity Title	S.No	Name of the tools/ equipment	Range/Value	Quantity
Materials Required	1.	Drawing board	D2 Size	01 No
	2.	Drafter	Mini	01 No
	3.	Pencils and pencil leads	H, 2H, HB	01 No
	4.	Scales	1 Feet	01 No
	5.	Protractor		01 No
	6.	Instrument Box		01 No
	7.	Drawing sheets	A2	01 No
	8.	French curves		01 No

BME_English_Practicals_2022.indd 170 25-01-2023 15:12:53

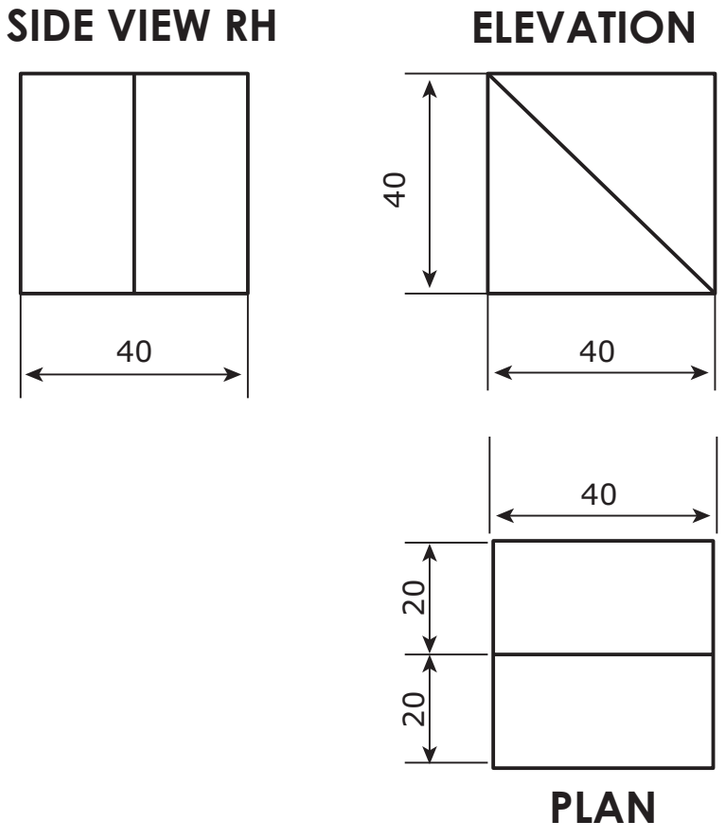

Procedure:

Step 1: Draw a horizontal straight line and make a centre point.

Step 2: From that point draw two inclined lines on both sides with 30° to the base line and from the same point draw a vertical line. [namely X, Y and Z axes]

Step 3: In that vertical line, mark the height of the object for front and end view.

Step 4: Draw the parallel lines for front and side views.

Step 5: Now we complete the isometric box.

Step 6: Mark the dimension of front, top and side views of orthographic projection in xy, xz, yz plane respectively.

Step 7: Draw the edge lines of the object darkly.

CONCLUSION

Thus the isometric view is drawn from given orthographic projections.

BME_English_Practicals_2022.indd 171 25-01-2023 15:12:53

DRAW THE SECTIONAL VIEW OF GIVEN ISOMETRIC PROJECTONS 12

DRAWING- 1

OBJECTIVE:

To draw the sectional view of cutting section given isometric view of object.

Operations covered under the project:

Selection of Drawing Sheet

↓

Selection of Drawing Instrument and materials

↓

Study the dimensions and hatching plane in isometric view of given figure

↓

Draw the top and front view of the given isometric drawing

↓

Hatch the cutting zone in front view

Section/ Activity Title	S.No	Name of the tools/ equipment	Range/Value	Quantity
Materials Required	1.	Drawing board	D2 Size	01 No
	2.	Drafter	Mini	01 No
	3.	Pencils and pencil leads	H, 2H, HB	01 No
	4.	Scales	1 Feet	01 No
	5.	Protractor		01 No
	6.	Instrument Box		01 No
	7.	Drawing sheets	A2	01 No
	8.	French curves		01 No

BME_English_Practicals_2022.indd 172 25-01-2023 15:12:53

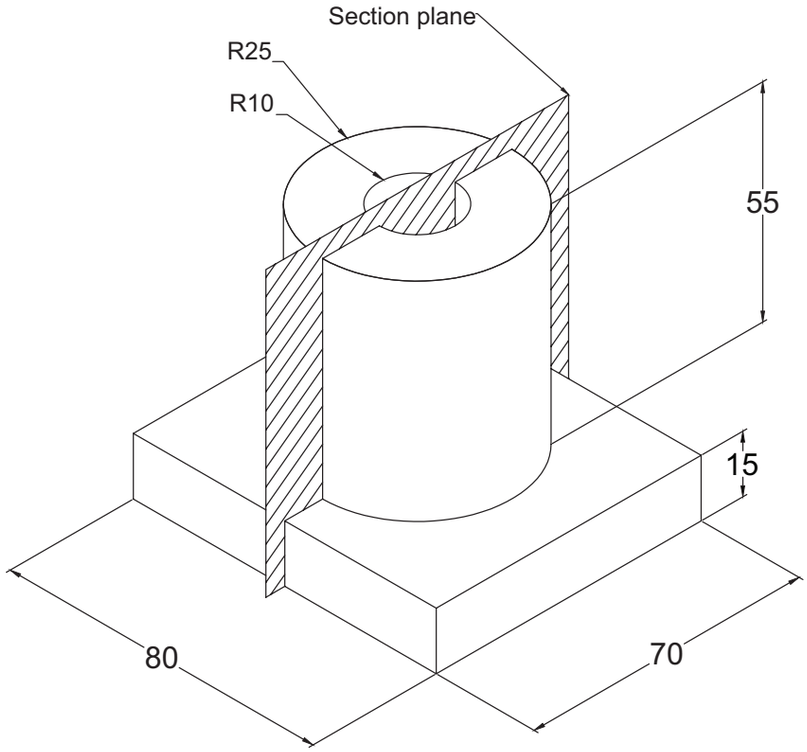

Procedure:

Step 1: Draw the top view of the given isometric view.

Step 2: Mark the cutting plane in the top view drawing.

Step 3: Draw the projection lines from the top view drawing to draw the front view.

Step 4: Draw the front view drawing in the projected lines as per the given dimensions.

Step 5: Draw the hatching lines in the front view in required zone according with the cutting plane.

Step 6: Hatching lines should be at the angle of 45° must have the gap of 1.5mm to 3mm between them.

CONCLUSION

Thus section view is drawn from the given isometric view.

Video Suggestions

S.NO	TITLE / PURPOSE	LINK
1	Drawing the sectional view from the given isometric view	https://youtu.be/NzH5KT0OdKM

BME_English_Practicals_2022.indd 173 25-01-2023 15:12:53

Simple Assessment

1. The angle of hatching line drawn in sectional view _____
2. The distance between the hatching lines _____
3. The diameter of the hole given _____
4. The height of the cylindrical part is _____

Answer key

1. 45°
2. 1.5 mm to 3mm
3. 20mm
4. 55mm

Student project	To draw the sectional view of different given isometric view
Guest lecture suggestions	Give the lecture about how to drawn the sectional view from given isometric view
Industrial / field visit suggestions	Not applicable

BME_English_Practicals_2022.indd 174 25-01-2023 15:12:54

DRAW THE SECTIONAL VIEW OF GIVEN ISOMETRIC PROJECTONS 13

DRAWING- 2

OBJECTIVE:

To draw the sectional view of cutting section given isometric view of object.

Operations covered under the project:

Selection of Drawing Sheet

↓

Selection of Drawing Instrument and materials

↓

Study the dimensions and hatching plane in isometric view of given figure

↓

Draw the top and front view of the given isometric drawing

↓

Hatch the cutting zone in front view

Section/ Activity Title	S.No	Name of the tools/ equipment	Range/Value	Quantity
Materials Required	1.	Drawing board	D2 Size	01 No
	2.	Drafter	Mini	01 No
	3.	Pencils and pencil leads	H, 2H, HB	01 No
	4.	Scales	1 Feet	01 No
	5.	Protractor		01 No
	6.	Instrument Box		01 No
	7.	Drawing sheets	A2	01 No
	8.	French curves		01 No

BME_English_Practicals_2022.indd 175 25-01-2023 15:12:54

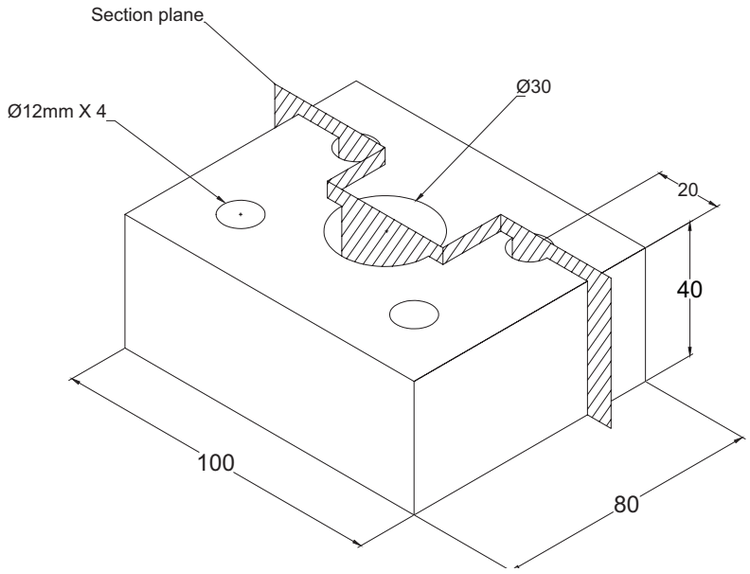

Procedure:

Step 1: Draw the top view of the given isometric view.

Step 2: Mark the cutting plane in the top view drawing.

Step 3: Draw the projection lines from the top view drawing to draw the front view.

Step 4: Draw the front view drawing in the projected lines as per the given dimensions.

Step 5: Draw the hatching lines in the front view in required zone according with the cutting plane.

Step 6: Hatching lines should be at the angle of 45° must have the gap of 1.5mm to 3mm between them.

CONCLUSION

Thus section view is drawn from the given isometric view.

BME_English_Practicals_2022.indd 176 25-01-2023 15:12:54

PRACTICAL - II

AUTOCAD SOFTWARE DRAWING PRACTICAL

REPRESENTATION OF GIVEN 2D FIGURE USING AUTOCAD SOFTWARE 14

OBJECTIVE:

To represent the given 2D figure using AutoCAD software

Operations/exercises covered under the project:

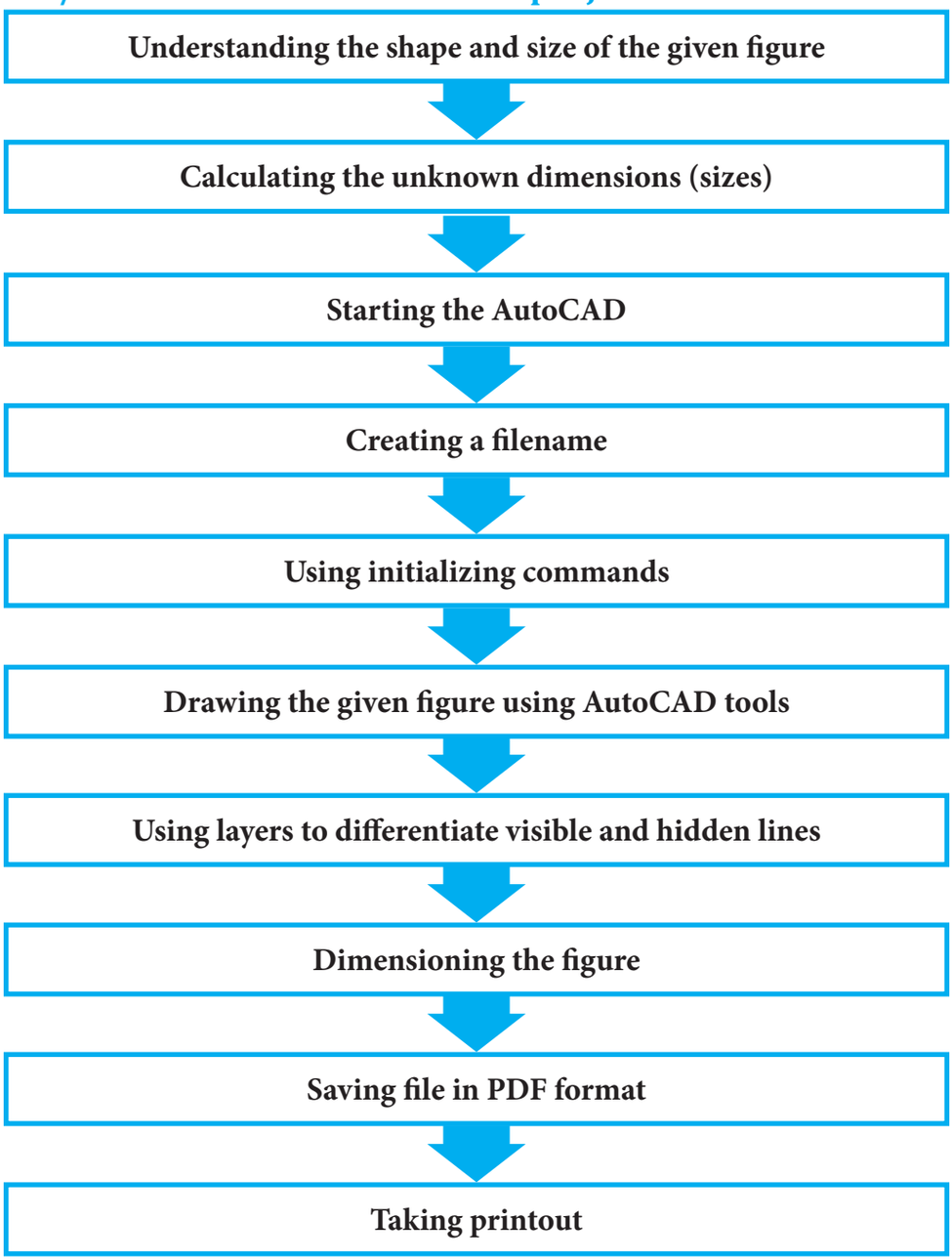

BME_English_Practicals_2022.indd 178 25-01-2023 15:12:54

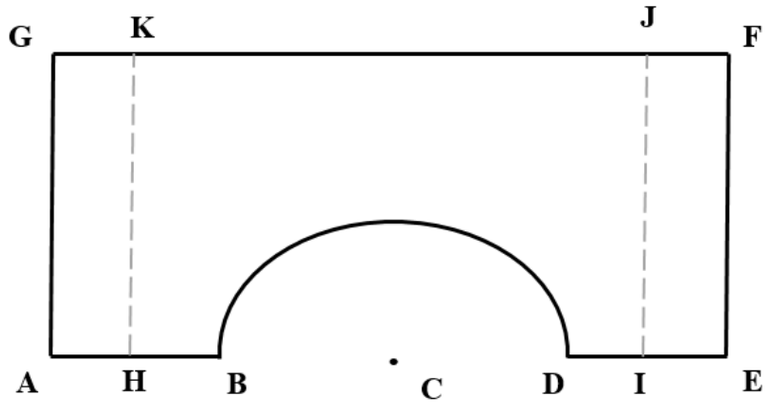

Calculation of unknown dimensions

GF = 100 mm,AG = 75 mm,and BD = 40 mm

From the figure, we can say

AE = GF = 100 mm

AB = DE =(AE – BD)/2=(100-40)/2= 30 mm

AC=AE/2=100/2=50 mm

BC=BD/2=40/2=20 mm=Radius of the arc BD

AH= GK=JF=EI=10 mm

Tools and equipment required

Section/ Activity Title	S. No	Name of the tools/ equipment	Range/Value	Quantity
Calculation	1	Calculators	Scientific	1
Drafting	2	Computer (Desktop/ Laptop)	Required configuration: 8 GB RAM, 256 GB HDD, 2 GB Graphics card	1/ student
	3	AutoCAD software	Version 2016	1/ user
	4	Printer	HP Laser jet printer of any series	1/ class

BME_English_Practicals_2022.indd 179 25-01-2023 15:12:54

Procedure:

Step 1: Open AutoCAD software by double clicking the AutoCAD icon

Step 2: Choose create and define new file name (Say, Example_1.dwg)

Step 3: Set UNITS as millimeters and precision '0'.

Step 4: Set LIMITS (0,0) and (297, 420)

Step 5: Use line command either by selecting the line tool in draw option or manually type LINE in command window. Draw the line AG, GF, FE, ED, AB by specifying the various options available.

Step 6: Draw the ARC with 'C' as center and radius equal to BC starting at B and end at D.

Step 7: Draw the dashed line (Hidden line) HK and IJ. Change its properties using LAYERS. Choose the linetype 'dashed line' and line color 'Dark grey' (To denote H pencil shade as all visible lines are Black in color which denotes HB pencil shade)

Step 8: Change the style of dimensions using DIMSTYLE. Modify the text height as 3 mm and arrow size appropriately. Set currently the modified dimension.

Step 9: Notate dimensions using DIMLINEAR and DIMARC.

Step 10: Export the Figure to PDF.

CONCLUSION

Thus the given 2D figure is represented using AutoCAD software

BME_English_Practicals_2022.indd 180 25-01-2023 15:12:54

REPRESENTATION OF 2D TRUE SHAPE OF THE CUT SECTION OF 3D OBJECT USING AUTOCAD SOFTWARE

15

Problem: A rectangular block of base dimension and height is cut by a section plane inclined at to the ground and perpendicular to the wall and passing through the midpoint of one of its rectangular faces which is perpendicular to both ground and the wall. Draw and measure the true shape of the cut section using AutoCAD software.

OBJECTIVE:

To draw and measure the 2D true shape of the cut section of 3D object using AutoCAD software

Operations/exercises covered under the project:

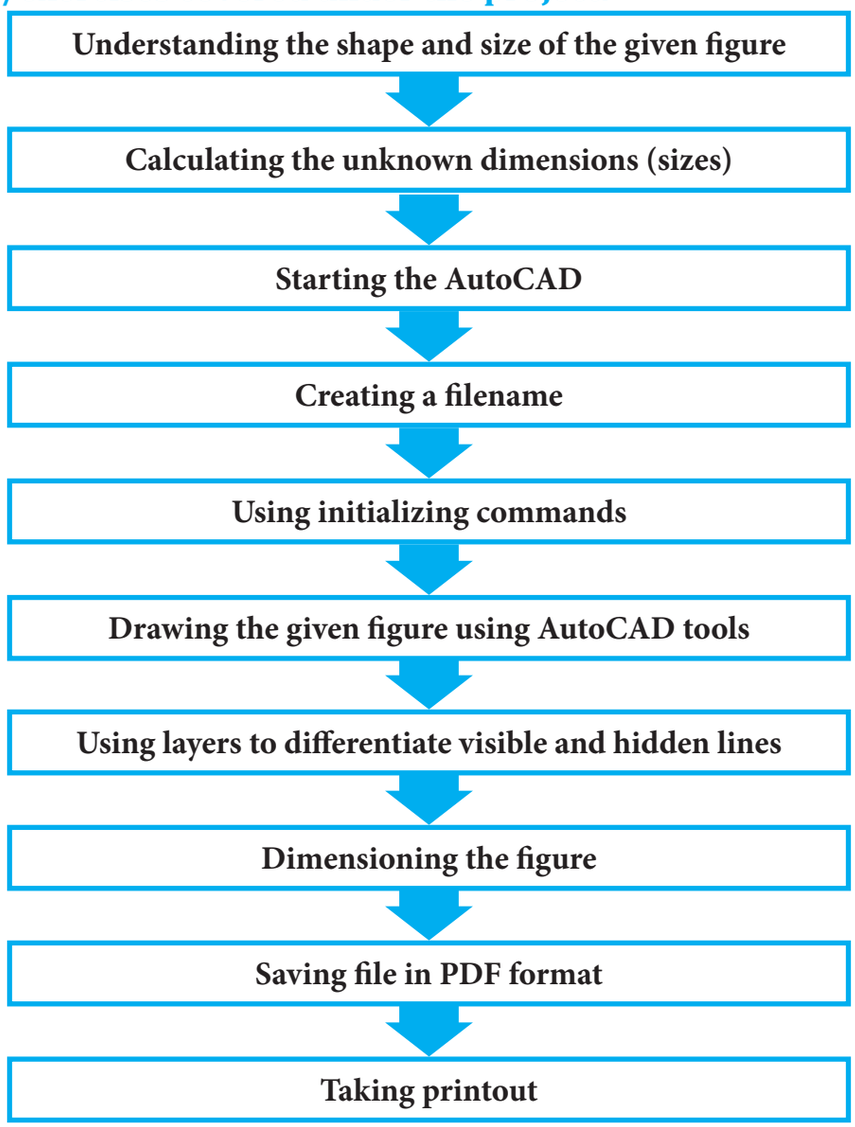

BME_English_Practicals_2022.indd 181 25-01-2023 15:12:54

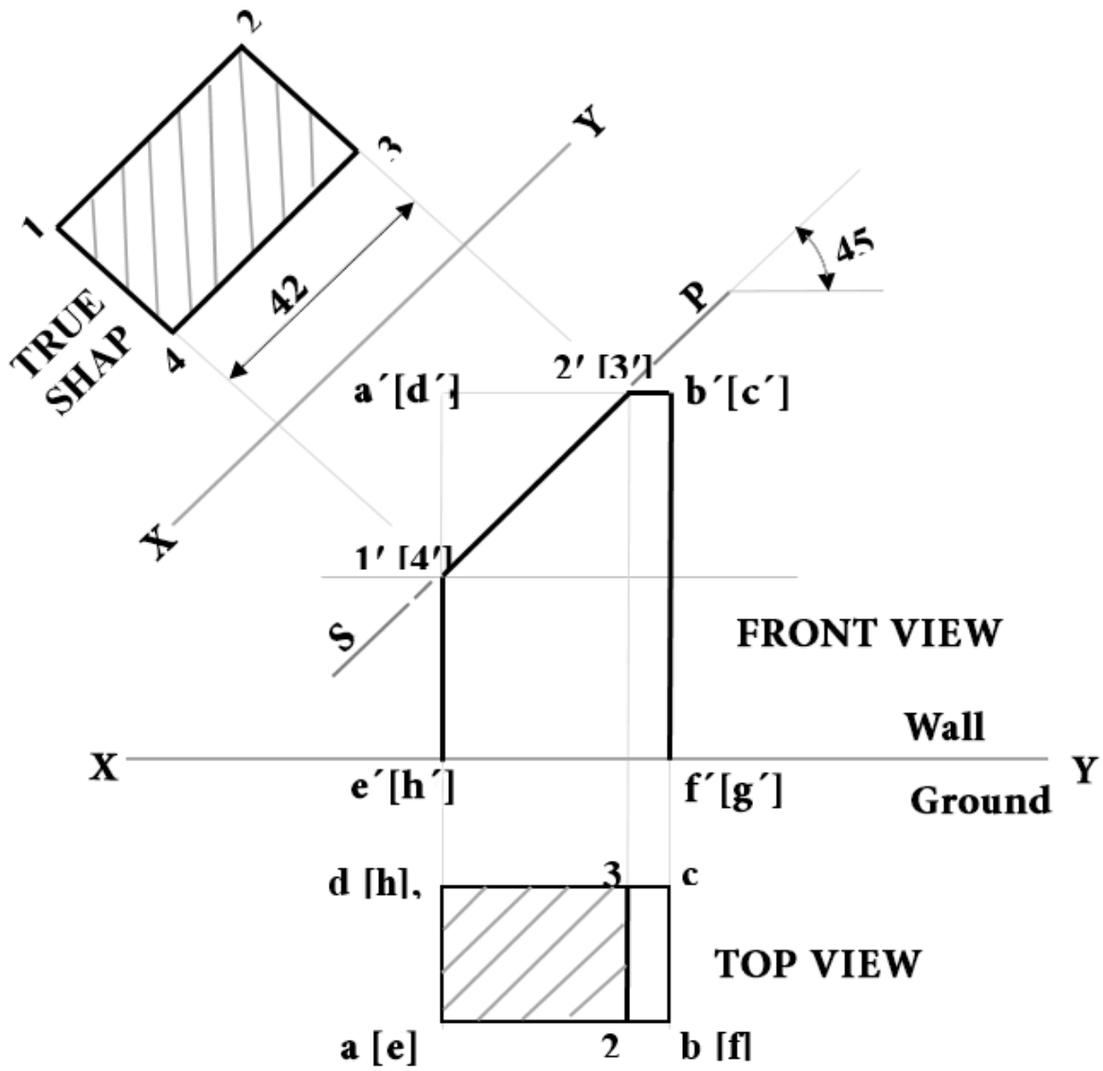

Dimensions: $ab = 40\,mm, ad = 20\,mm, ae = 60\,mm$

Tools and equipment required

Section/ Activity Title	S. No	Name of the tools/ equipment	Range/Value	Quantity
Calculation	1	Calculators	Scientific	1
Drafting	2	Computer (Desktop/ Laptop)	Required configuration: 8 GB RAM, 256 GB HDD, 2 GB Graphics card	1/ student
	3	AutoCAD software	Version 2016	1/ user
	4	Printer	HP Laser jet printer of any series	1/ class

BME_English_Practicals_2022.indd 182 1/30/2023 5:40:49 PM

Procedure:

Step 1: Open AutoCAD software by double clicking the AutoCAD icon

Step 2: Choose create and define new file name (Say, Example_1.dwg)

Step 3: Set UNITS as millimeters and precision '0'.

Step 4: Set LIMITS (0,0) and (297, 420)

Step 5: Use line command either by selecting the line tool in draw option or manually type LINE in command window. Draw the line AG, GF, FE, ED, AB by specifying the various options available.

Step 6: Draw the ARC with 'C' as center and radius equal to BC starting at B and end at D.

Step 7: Draw the dashed line (Hidden line) HK and IJ. Change its properties using LAYERS. Choose the linetype 'dashed line' and line color 'Dark grey' (To denote H pencil shade as all visible lines are Black in color which denotes HB pencil shade)

Step 8: Change the style of dimensions using DIMSTYLE. Modify the text height as 3 mm and arrow size appropriately. Set currently the modified dimension.

Step 9: Notate dimensions using DIMLINEAR and DIMARC.

Step 10: Export the Figure to PDF.

CONCLUSION

Thus the 2D true shape of cut section of 3D object is drawn and the dimension of the true shape is measured as 20 mm×42 mm

BME_English_Practicals_2022.indd 183 25-01-2023 15:12:54

REPRESENTATION OF GIVEN 2D FIGURE USING AUTOCAD SOFTWARE – 1

16

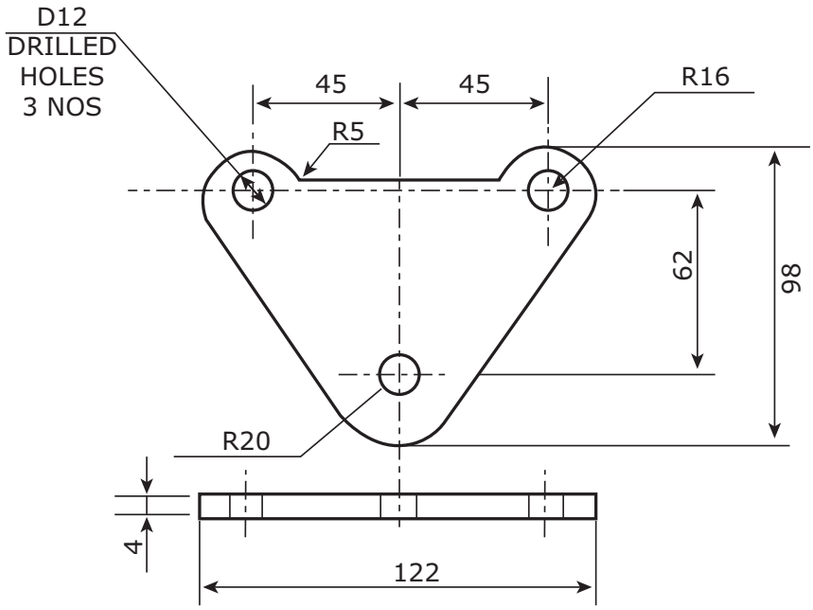

BME_English_Practicals_2022.indd 184 25-01-2023 15:12:54

REPRESENTATION OF GIVEN 2D FIGURE USING AUTOCAD SOFTWARE – 2.

17

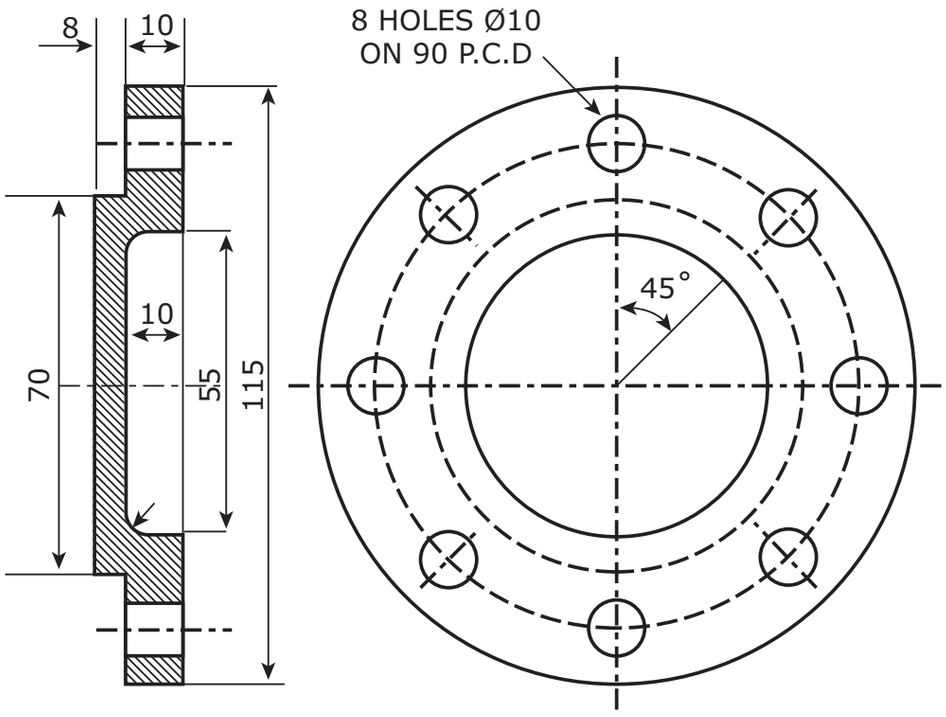

BME_English_Practicals_2022.indd 185 25-01-2023 15:12:54

DRAW THE ORTHOGRAPHIC PROJECTION OF THE FIGURE GIVEN BELOW USING AUTOCAD SOFTWARE

18

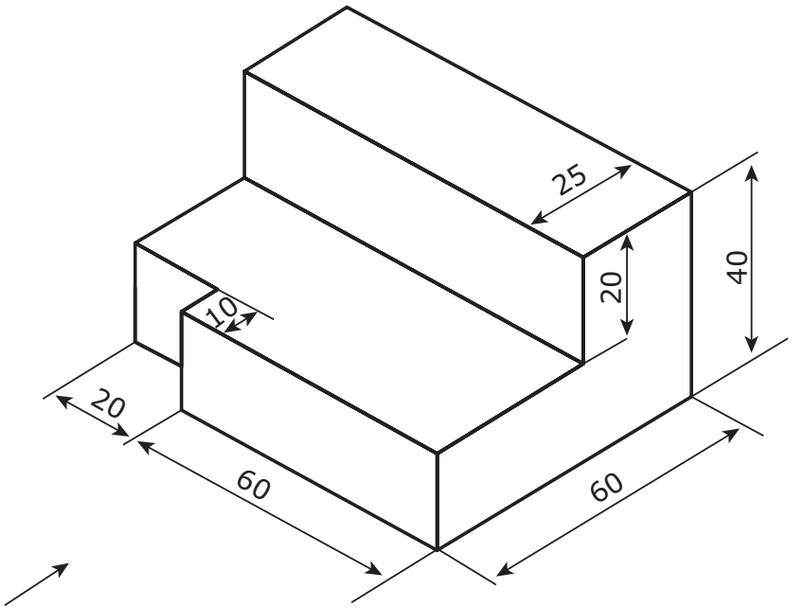

BME_English_Practicals_2022.indd 186 25-01-2023 15:12:54

DRAW THE ORTHOGRAPHIC PROJECTION OF THE FIGURE GIVEN BELOW USING AUTOCAD SOFTWARE:

19

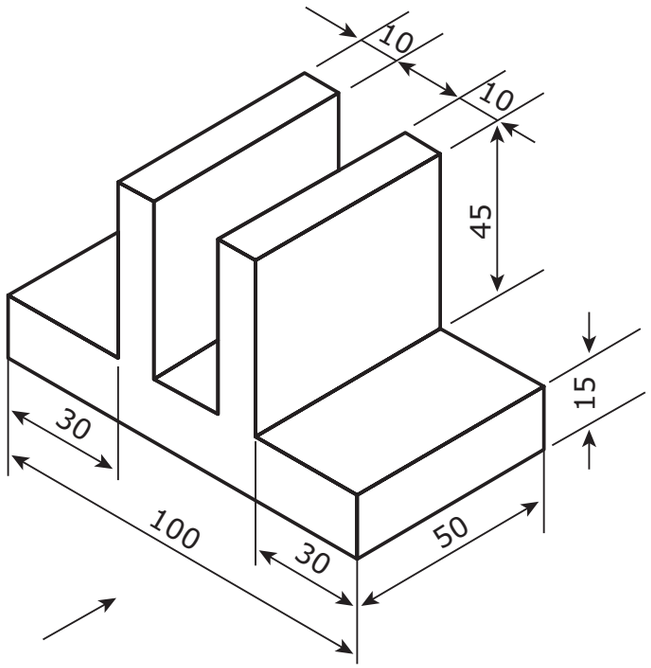

BME_English_Practicals_2022.indd 187 25-01-2023 15:12:54

REPRESENTATION OF 2D TRUE SHAPE OF THE CUT SECTION OF 3D OBJECT USING AUTOCAD SOFTWARE

20

Problem: A cube of side 40 mm is placed on the ground such that it is cut by a section plane passing through its solid diagonal. Identify the shape of the true section and measure its dimension using the AutoCAD software.

BME_English_Practicals_2022.indd 188 25-01-2023 15:12:54

Higher Secondary – Class XI – Basic Mechanical Engineering
List of Authors and Reviewers

Academic Advisor & Expert

Dr. Pon. Kumar
Joint Director (Syllabus),
State Council of Educational Research and Training,
Chennai.

Domain Expert

Dr. P. Manivannan,
Professor,
School of Aeronautical Science, Hindustan University,
Kelambakkam, Chennai.

Reviewers

Mr. S. Rajendra Boopathy,
Professor,
Department of Mechanical Engineering,
Central Workshop Division, Anna University, Chennai.

Mrs. S. Jayabharathi,
HOD, Mechanical Department
Central Polytechnic college
Chennai

Academic Coordinators

Dr. A. Ilangovan,
Dr.Radhakrishnan Awardee-2018
Assistant Professor,
SCERT, Chennai.

K.Gomathi
Lecturer,
DIET, Thirur,
Thiruvallur District.

P. Malarvizhi,
B.T. Assistant,
PUMS, Padiyanallur,
Thiruvallur District.

Art and Design Team

Layout Designing and Illustration

Arockiam Felix, Chennai.

In - House QC

Gopinath Ragupathy, Balasubramani R

WrapperDesign

Kathir Arumugam

Coordination

Ramesh Munisamy

Authors

Mr. C. Ravivarman,
State Best Teacher Awardee-2015
Vocational Teacher,
Govt. Boys Hr. Sec. School,
Nattrampalli, Tirupattur District.

Mr. B. Prabakaran,
Vocational Teacher,
Govt. Boys Hr. Sec. School,
Vandavasi, Thiruvannamalai District.

Mr. N. Palanivelu,
Vocational Teacher,
Govt. Boys Hr. Sec. School,
Arni, Thiruvannamalai District.

Mr.A. Madurai Muthu
Vocational Teacher,
Govt. Boys Hr. Sec. School,
Magudanchavadi, Salem District.

Mr. R. Arumugam,
Vocational Teacher,
Govt. Boys Hr. Sec. School,
Ondipudur, Coimbatore District.

Mr. P. Balasubramaniam,
Vocational Teacher,
Govt.Hr. Sec. School,
Muthur, Tiruppur District.

Industrial Expert

Mr.R. Dheenathayalan,
ZRI Enterprises
Manager/Trainer
Hosur, Krishnagiri District

EMIS Technology Team

R.M. Satheesh
State Coordinator Technical,
TN EMIS, Samagra Shiksha.

K.P. Sathya Narayana
IT Consultant,
TN EMIS, Samagra Shikaha

R. Arun Maruthi Selvan
Technical Project Consultant,
TN EMIS, Samagra Shiksha

This book has been printed on 80 G.S.M.
Elegant Maplitho paper.

Printed by offset at:

BME_English_Practicals_2022.indd 189 25-01-2023 15:12:54

BME_English_Practicals_2022.indd 190 25-01-2023 15:12:54