GOVERNMENT OF TAMIL NADU

HIGHER SECONDARY SECOND YEAR

VOCATIONAL EDUCATION

Basic Automobile Engineering

THEORY & PRACTICAL

A publication under Free Textbook Programme of Government of Tamil Nadu

Department of School Education

Untouchability is Inhuman and a Crime

BAE_ENG_FM_Option.indd 1 01/11/2022 12:33:28 PM

Government of Tamil Nadu

First Edition - 2019

Revised Edition - 2020,2022

Reprint - 2021,2023, 2024

(Published under New Syllabus)

NOT FOR SALE

Content Creation

State Council of Educational Research and Training

© SCERT 2019

Printing & Publishing

Tamil NaduTextbook and Educational Services Corporation

www.textbooksonline.tn.nic.in

BAE_ENG_FM_Option_EM.indd 2 24/12/2023 09:39:00

Preface

We take immense pleasure in presenting the text book on “Basic Automobile Engineering” theory for the second year students of Higher Secondary course. The authors express their deepest gratitude to the teachers and the SCERT for their support and help to write, compose and publish this book in time.

This book is divided into ten chapters, each covers the major sub-system of Automotive System. A range of examples for components and lay out for assembled systems are given and discussed for easy understanding by the students. Most of the drawings of the components are simplified and presented for easy explanation and the pictorial photographs are also added for better understanding.

“Do you know” box items are included to highlight the facts and figures of the recent developments. The practical part includes dismantling, inspection and assembly in each chapter to enable the student to appericiate the construction and working principles. We are sure that this book would help the students acquire theoretical knowledge, analytical ability and practical skill.

To facilitate further learning and higher order thinking reference books, videos, websites have been incorporated for each chapter. Suggestions, innovative ideas and constructive criticisms are welcome for due consideration and inclusion in the future edition.

BAE_ENG_FM_Option.indd 3 01/11/2022 12:33:28 PM



How to use the book?

	Higher Studies	List of professions related to the subject.
	Learning Objectives	Learning objectives are brief statements that describe what students will be expected to learn by the end of school year, course, unit, lesson or class period.
	Do You Know?	Amazing facts, Rhetorical questions to lead students to Automobile inquiry
	QR Code	To download QR code scanner from the google play store To open the QR code The camera will open after scanner button is pressed. To focus the camera to scan the QR code The URL link will be displayed on the screen after QR code is read by the camera. Get the information related to the lesson through the website
	Student Activity	Directions are provided to students to conduct activities in order to explore, enrich the concept.
	Evaluation	Assess students to pause, think and check their understanding
	Practical	The details of practicals realated to the lessons are given in detail
	Case Study	To encourage you, the role model students who studied in this group and achieved in various fields such as employment, self-employment and higher studies are mentioned in this case study.
	Web Reference	To motivate the students to further explore the content digitally and take them in to virtual world
	Book References	List of related books for further details of the topic

BAE_ENG_FM_Option.indd 4 01/11/2022 12:33:28 PM



Career Guidance

Vertical Mobility

Engineering

1. Directly to Join 2nd year Diploma Engineering in Government Aided and private polytechnics and select any other major Engineering course.
2. 10% of the Seats are allotted to Government and Government Aided and Private Engineering colleges to Join Ist year graduate engineering.
3. Distance Education Directly under go the course AMIE which is equal to Government Engineering Courses. Maximum Duration Six years.

Arts

1. +2 Vocational Groups Student are eligible to Join Ist year Diploma Teacher Training Course.
2. Directly Join B.A. Arts Group Except – Physic Chemistry, Biology major all other science group.
3. Directly Join B.Sc Math's group.

Horizontal Mobility

Employments

1. Directly Join to Reputed Industries as Apprentice Training/Factory Training like
   a) Ashok Leyland. (Chennai and Hosur)
   b) TVS Groups. (Chennai, Hosur, Madurai, etc.)
   c) ABT Maruti. (Chennai, Coimbatore, Pollachi, etc.)
   d) Hyundai Car Company. (Sriperumbudar, Irrangatukdtai, Chennai)
   e) Ford India Ltd. (Maraimalai Nagar)
   f) All Reputed Service centers like TVS, VST and Hyundai, Ford etc.
   g) All Automobile leading manufacturing, repairing and servicing centers.

Self-Employment

1. Vocational Students after getting Apprentice Training Industry Training are eligible to get small scale Industry Loan from Hudco, TIDCO, SIDCO etc.
2. After Adequate required experience in the field getting they are eligible to minimum loans under the scheme of
   a) NRY (Nehru Rozhar Yogana)
   b) PMRY (Prime Minister Rozhar Yogana)
   c) TRYSEM (Training for Rural Youth and Self Employment)
   d) PMKVY (Pradhan Mantri Kaushal Vikas Yojana)

BAE_ENG_FM_Option.indd 5 01/11/2022 12:33:28 PM



Contents

Basic Automobile Engineering

Unit No.	Chapter Title	Page No.	Month
1.	Transmission System	1-14	June
2.	Clutch Unit	15-29	June
3.	Gear Box	30-54	July
4.	Propeller Shaft and Rear Axle	55-73	August
5.	Wheels and Tyres	74-90	September
6.	Braking System	91-122	October
7.	Suspension System	123-144	October
8.	Steering System	145-166	November
9.	Chassis and Body	167-183	November
10.	Electrical System	184-219	Nov-Dec
	Model Question Paper	220-222	
	Basic Automobile Engineering Practical	223-261	
	Case Studies	262-268	
	References	269-270	
	Common Glossary	271-273	

YIWU8

E-book

MS1RY

Assessment

BAE_ENG_FM_Option.indd 6 01/11/2022 12:33:28 PM

UNIT 1

Transmission System



Contents

1.0 Introduction
1.1 Transmission system
  1.1.1 Parts of Transmission system
1.2 Needs of Transmission system
1.3 Types of Transmission system
  1.3.1 Front Engine Rear Wheel Drive
  1.3.2 Front Engine Front Wheel Drive
  1.3.3 Front Engine Four Wheel Drive
  1.3.4 Rear Engine Rear Wheel Drive
1.4 Air resistance
1.5 Rolling resistance
1.6 Gradient resistance
1.7 Tractive effort
  1.7.1 Traction
1.8 Chassis and its components in automobile system
  1.8.1 Application of chassis in automobiles
  1.8.2 Frame
  1.8.3 Engine
  1.8.4 Clutch
  1.8.5 Gear box
  1.8.6 Propeller shaft and Universal Joint
  1.8.7 Front axle
  1.8.8 Rear axle and Differential
  1.8.9 Suspension system
  1.8.10 Steering system
  1.8.11 Braking system
  1.8.12 Wheel and tyre
  1.8.13 Electrical system

J6NWM

Learning objectives

1. To study how the power derived from engine is transferred to rear axle.
2. To study various types of drives used to power the rear axle for its functioning.
3. To identify the obstacles faced by automobiles when goes on the road.
4. To study the various components in automobile transmission system and its uses.

BAE_ENG_Chapter_01.indd 1 01/11/2022 11:38:12 AM

1.0 Introduction

In an automobile, engine is the main source for developing the power and the power produced from it must be transmitted to the wheels of the vehicle to move it from one place to another. The system which is developed for transmitting the power from the engine to the wheels of the vehicle is called as the automobile transmission system or vehicle power transmission system. For basic needs of the vehicle and for space requirements, the manufacturers place the engines in appropriate locations and transmit the energy from the engine to the wheels by various ways. Let us discuss some of the ways how the power is transmitted to the wheels with suitable diagrams.

1.1 Transmission system

In automobiles the rotary power (or torque) is obtained from the engine. The developed power is transmitted to the rotating wheels on the road. The unit which has various components connected in between the engine and the rear wheels of the vehicle is called as the automobile power transmission system. Let us see the important parts of an automobile transmission system.

1.1.1 Parts of Transmission System

1. Clutch
2. Gear box
3. Propeller shaft
4. Universal joint
5. Differential
6. Rear axle

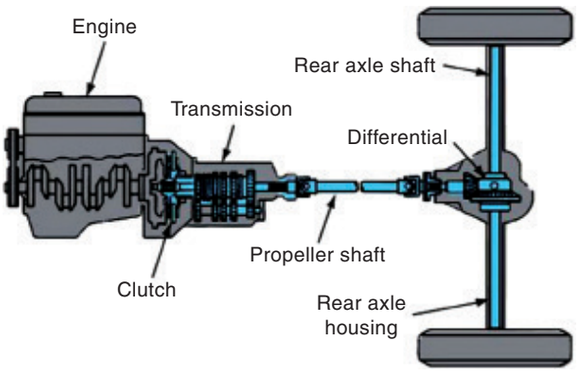

Figure 1.1.1 Important components of a transmission system of an automobile

1.2 Needs of transmission system

- For transmitting and stopping torque developed from the engine to the rear axle of the vehicle.
- For transmitting power to wheels without any noise during the engine is running.
- For avoiding vibrational effects during the transmission of power from engine to the rear wheels.
- For operating the vehicle wheels at the required speed.
- For balancing the speed of the wheels during vehicle is in running.

1.3 Types of transmission system

1. Front Engine Rear Wheel Drive
2. Front Engine Front Wheel Drive
3. Front Engine Four Wheel Drive
4. Rear Engine Rear Wheel Drive

1.3.1 Front engine rear wheel drive

Generally front engine rear wheel drive is commonly used in most of the vehicles. The power from the engine to

BAE_ENG_Chapter_01.indd 2 01/11/2022 11:38:13 AM

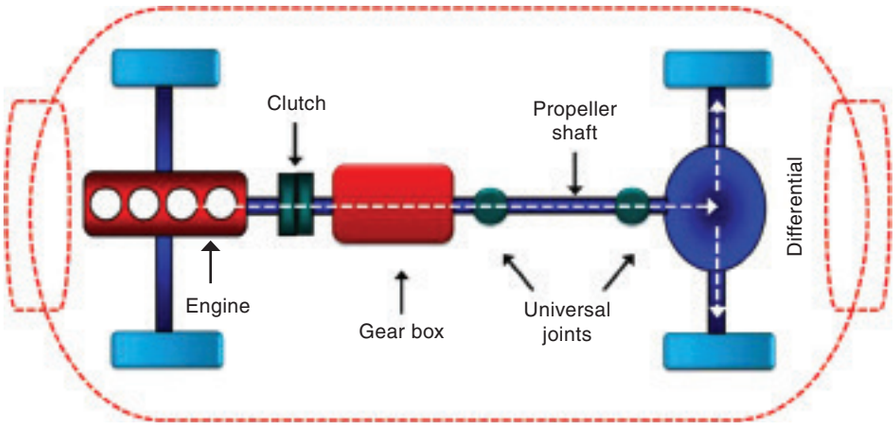

Figure 1.3.1 Front engine rear wheel drive

the running wheels is transmitted through the clutch, gearbox, universal joint and the differential unit. The front engine rear wheel drive is shown in figure 1.3.1.

Advantages

- Engine cooling is good
- Vehicle's weight is evenly distributed
- It is easy to connect the components with the engine
- It is easy to control the vehicle

Disadvantages

- Lengthy propeller shaft is needed
- Vehicle's ground clearance is high
- Vehicle's stability is low.

1.3.2 Front engine front wheel drive

In front engine front wheel drive, the clutch, gearbox and the differential unit are made as an integral part. The engine's power is transmitted to the front wheels by means of the clutch, gearbox, differential and small shaft. Propeller shaft is not necessary in such drives for transmitting the power.

Two pairs of constant velocity universal joints are used in front axle. The first one is located near the differential and another one is kept near the stub axle. To Transfer power with required angle and to transmit the steering power to the wheel these joints are being used. This type of drive is used in modern vehicles. Its construction is shown in figure 1.3.2.

Advantages

- Simple in design
- Have high stability
- Good road grip
- High engine cooling
- Good control over the vehicle
- There is no need of a separate propeller shaft

Disadvantages

- Maintenance cost is high
- Road grip is less when the vehicle is driven in slope or slanting regions
- Due to the engine's exhaust, passengers gets affected

1.3.3 Front engine four wheel drive

Four wheel drive is the one in which the engine's power is transmitted to all the four wheels at a time. The four

BAE_ENG_Chapter_01.indd 3 01/11/2022 11:38:13 AM

DO YOU KNOW?

The first modern automobile was built in 1886 by German inventor Carl Benz.





- Weight: 265 kilograms
- Maximum speed : 16 kilometers per hour
- Engine type – Four-stroke, carburetor
- Water-cooled engine
- Number of cylinders : 1
- Engine volume : 954 cm^3
- Power –0.9 horsepower (at 400 revolutions per minute)



1906, Kari Benz donates his car to the German Museum in Munich, Germany 1936. Three copies of the Karl Benz car are built for the Mercedes-Benz Museum, the Museum of Technology in Vienna and the Transport Museum in Dresden.

BAE_ENG_Chapter_01.indd 4 01/11/2022 11:38:13 AM

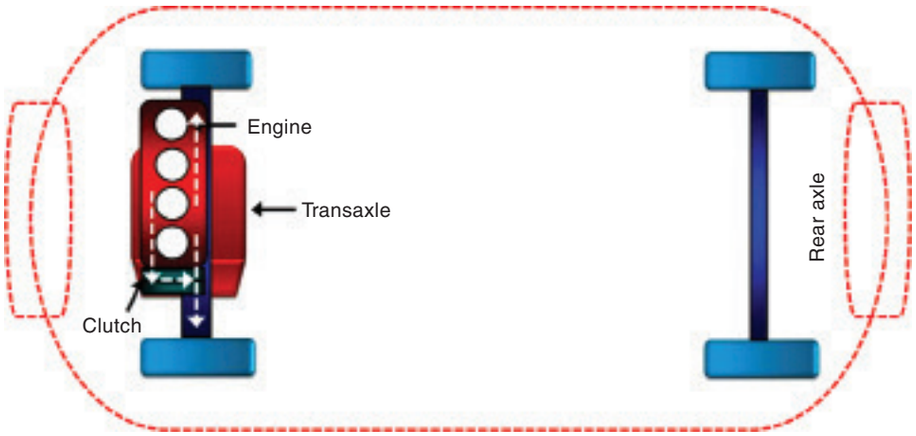

Figure 1.3.2 Front engine front wheel drive

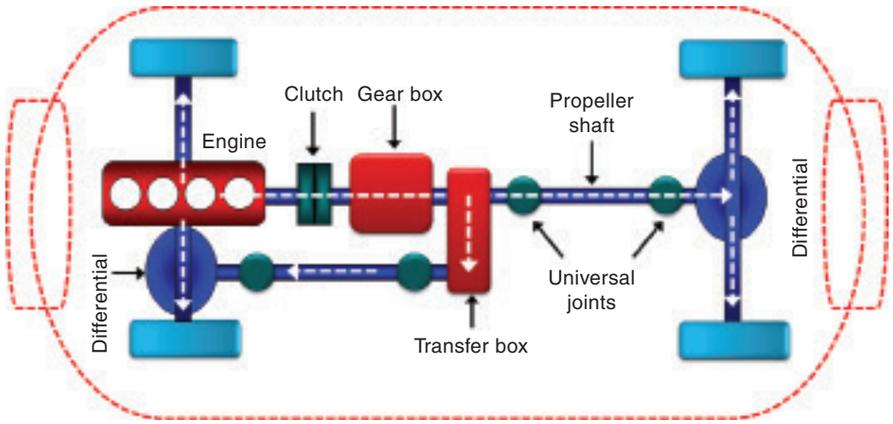

Figure 1.3.3 (a) Front engine four wheel drive

wheel drive consists of two differential units, four universal joints, one constant velocity universal joint, a propeller shaft and a transfer case.

In four wheel drive the engine's power is transmitted to the transfer case by clutch, gearbox and a small shaft. From the transfer case the power is being transferred through two propeller shafts to front and rear axle differentials, from that the power is finally transmitted to all the four wheels. In such operation high power is obtained hence four wheel drives are more suitable for mud and wet roads. Mostly four wheel drives are used in military vehicles, Jeep, special vehicles and foreign vehicles

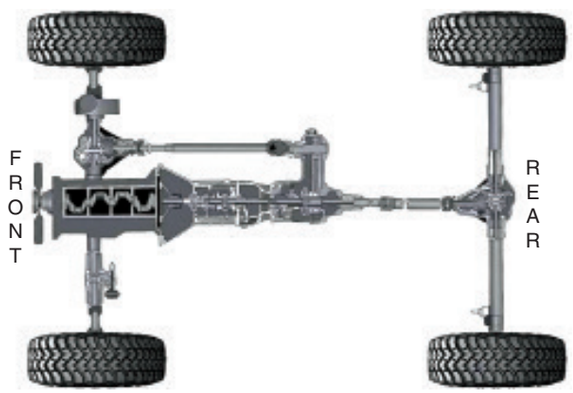

Figure 1.3.3 (b) Front engine four wheel drive

BAE_ENG_Chapter_01.indd 5 01/11/2022 11:38:13 AM

Advantages

- Pulling power is more
- Can operate vehicles in water, mud, clay and slime areas also
- Sometimes if one wheel fails to function, vehicles can operate using other three wheels

Disadvantages

- Initial cost is high
- Maintenance is high
- Complicated design
- Create more noise
- Vibration is more

1.3.4 Rear engine rear wheel drive

In the rear engine rear wheel drive clutch, gearbox and differential unit are made as a single unit. The engine power is transferred to rear wheel by means of the clutch, gearbox, differential and a small shaft. Propeller Shaft is not used. In this type of drive placing the engine's exhaust system is easy. As the driver is sitting in the front it is difficult to control clutch and gearbox. The drive needs long linkages in this type of drive

Advantages

- Simple in design
- Separate propeller shaft is not needed
- Brake power is high
- No problem to passengers because of exhaust
- No need for lengthy propeller shaft

Disadvantages

- Stability is less
- Long linkages are needed
- Maintenance is high
- Engine cooling is less.

1.4 Air resistance

On the road the blowing wind against the direction of the vehicle and the opposing force due to the vehicle speed oppose the vehicle to move front. This opposing force is called as the air resistance.

To find the air resistance of a vehicle, the following formula can be used.

$$\text{Air resistance } (R_a) = K_a A.V^2$$

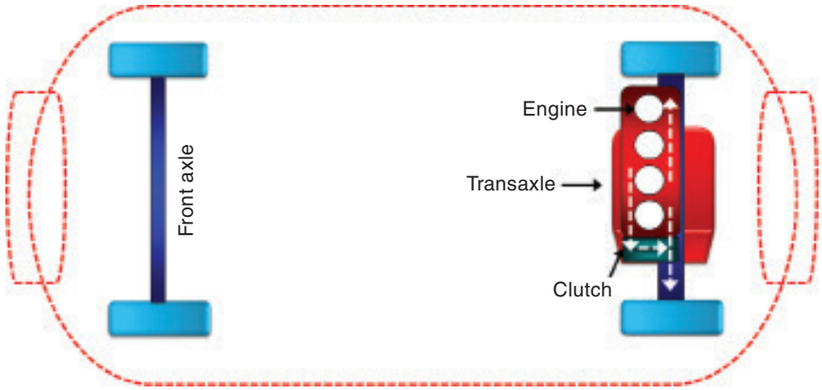

Figure 1.3.4 Rear engine Rear wheel drive

BAE_ENG_Chapter_01.indd 6 01/11/2022 11:38:13 AM

DO YOU KNOW?

- Traffic congestion wastes three billion gallons of gas each year.





- Car facts tell us that as of 2010, over 1 billion cars were being driven all over the world. The number of cars in 1986 was just half of this figure. India and China saw the greatest increase in the number of cars on their roads between these two years.

where, A = frontal area of the vehicle, in m^2

V = Velocity of the vehicle in km/hr

K_a = Co-efficient of air resistance,

= 0.0032 (car)

= 0.0046 (truck and lorry)

1.5 Rolling resistance

When the vehicle's wheel is rolling on the road, due to the mud, sand, pits, ups and down conditions of the road causes a resistance on the vehicle from its movement. This opposing force is called as the rolling resistance.

BAE_ENG_Chapter_01.indd 7 01/11/2022 11:38:15 AM

The Rolling resistance of a vehicle can be calculated by using the formula

Rolling resistance (R_r) = K.W

Where, W = Weight of the vehicle, Kg

K = Rolling Constant

= 0.005 for good road.

= 0.18 for mud road.

1.6 Gradient resistance

When a vehicle claims on the mountains or high bridges, the complete weight of the vehicle is dragged backwards because of the gravitational force which causes opposing force acting on the vehicle. This opposing force is called as gradient resistance

The gradient Resistance can be calculated by using the following formula

Gradient Resistance (R_G) = W sin θ

Where, W = Weight of vehicle, Kg

θ = Angle between straight and inclined Road

1.7 Tractive effort

When the vehicle is rolling on the road the frictional force between the top of the road and the tyre surface which is in contact on the road is called as the tractive effort.

1.7.1 Traction

Traction is defined as the action which maintains or transfers the tractive effort as same.

1.8 Basic components of Automobile

1. Frame
2. Engine
3. Clutch
4. Gear box
5. Propeller shaft
6. Rear axle
7. Front axle
8. Suspension system
9. Steering system
10. Braking system
11. Wheel and tyre and
12. The electrical system

1.8.1 Important components of the automobile chassis

The vehicle without the body is called as the Chassis. It is the under part of an automobile on which the body is mounted. The Chassis is called as the back bone of the vehicle. The structure of the chassis is shown in the above Figure 1.8.1.

1.8.2 Frame

It is a lengthy component which has cross frames joined rigidly by rivets. It is the foundation for carrying the engine, transmission system, steering system. This frame is made of stainless steel which is able to carry the whole weight of the vehicle. It is back bone of the vehicle.

1.8.3 Engine

The necessary power can be produced from the engine for running

BAE_ENG_Chapter_01.indd 8 01/11/2022 11:38:15 AM

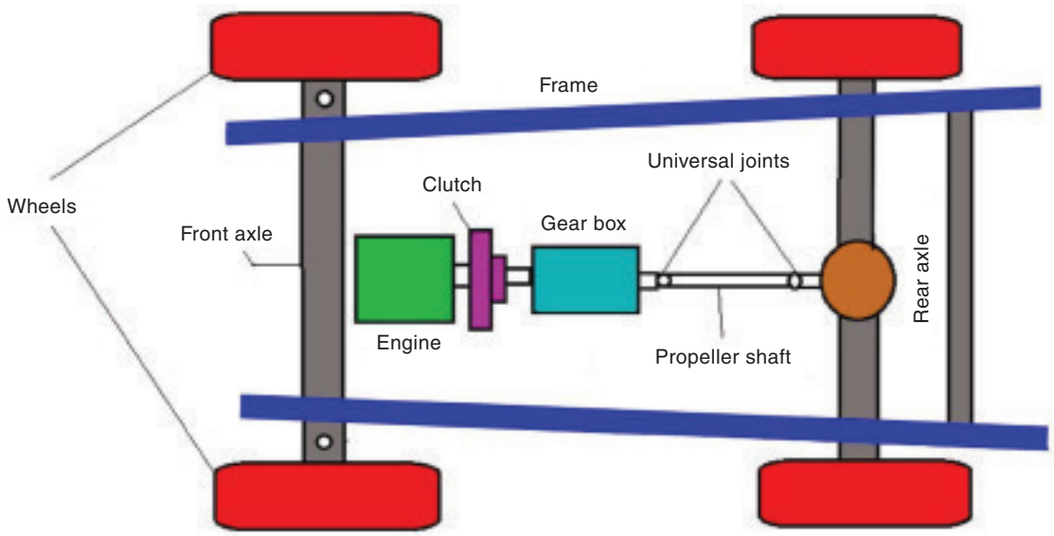

Figure 1.8.1 Important components of the Chassis

the vehicle. Petrol and Diesel are used as fuels to run the engine. It is located at the front of the vehicle. It converts the heat energy by burning the fuel into mechanical energy. Hence it is called as the heart of the vehicle.

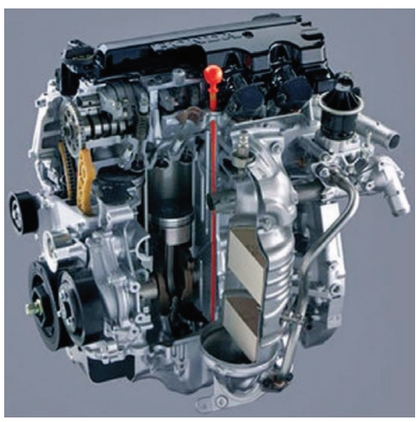

Figure 1.8.3 Engine

1.8.4 Clutch

Clutch is a mechanical device which is used to transfer and cut the engine's power transmitted to the driveline. It is located in between engine and gear box.

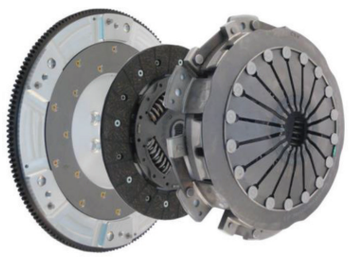

Figure 1.8.4 Clutch

1.8.5 Gear box

The box with set of gears inside the casing is called as gear box. It is used to change (increase and reduce) the speed and torque of vehicle according to different road and load conditions of the vehicle. It is shown Figure 1.8.5.

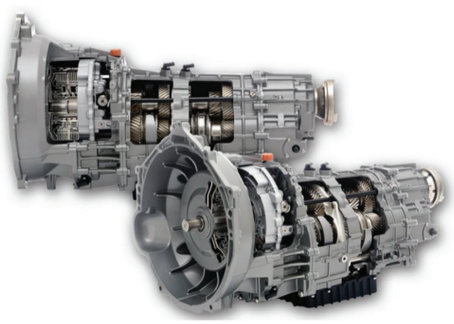

Figure 1.8.5 Gear box

BAE_ENG_Chapter_01.indd 9 01/11/2022 11:38:15 AM

1.8.6 Propeller Shaft

It is a type of long hollow shaft. This is located in between the gear box and differential. It transmits power from gear box to differential. It is shown Figure 1.8.6.



Figure 1.8.6 Propeller shaft

1.8.7 Front axle

Front wheels are coupled with front axle. Front axle carries the weight of the front part of the vehicle as well as facilitates steering and absorbs shocks due to road surface variations. It is shown Figure 1.8.7.



Figure 1.8.7 Front axle

1.8.8 Rear axle and Differential

Rear wheels are attached to the two ends of rear axle. The rear axle helps to turn the vehicle into the curved road. The differential gear in the center is cut by the speed of the cycle through the propeller shaft and then transported to 90° by wheels. It is shown Figure 1.8.8.



Figure 1.8.8 Rear Axle and Differential

1.8.9 Suspension system

The Spring Shock absorber has been connected to the front and back axles and helps to drive the vehicle smooth and slower from the vibrations in the road. It is shown Figure 1.8.9.

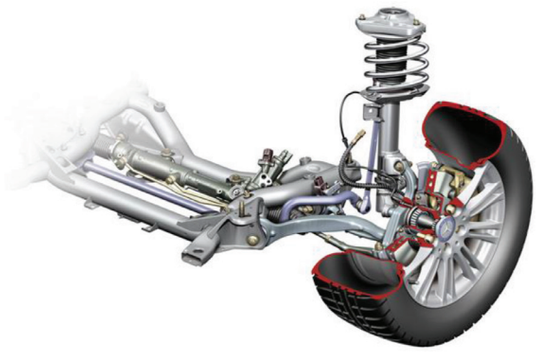

Figure 1.8.9 Suspension system

1.8.10 Steering system

The steering system operates on a very simple mechanism that directly transforms steering wheel rotation into straight line movement and helps in turn the vehicle as per the road. It is shown Figure 1.8.10.



Figure 1.8.10 Steering system

1.8.11 Braking system

Brakes are installed on the four wheels of the vehicle and work through mechanical connections, hydraulic

BAE_ENG_Chapter_01.indd 10 01/11/2022 11:38:16 AM

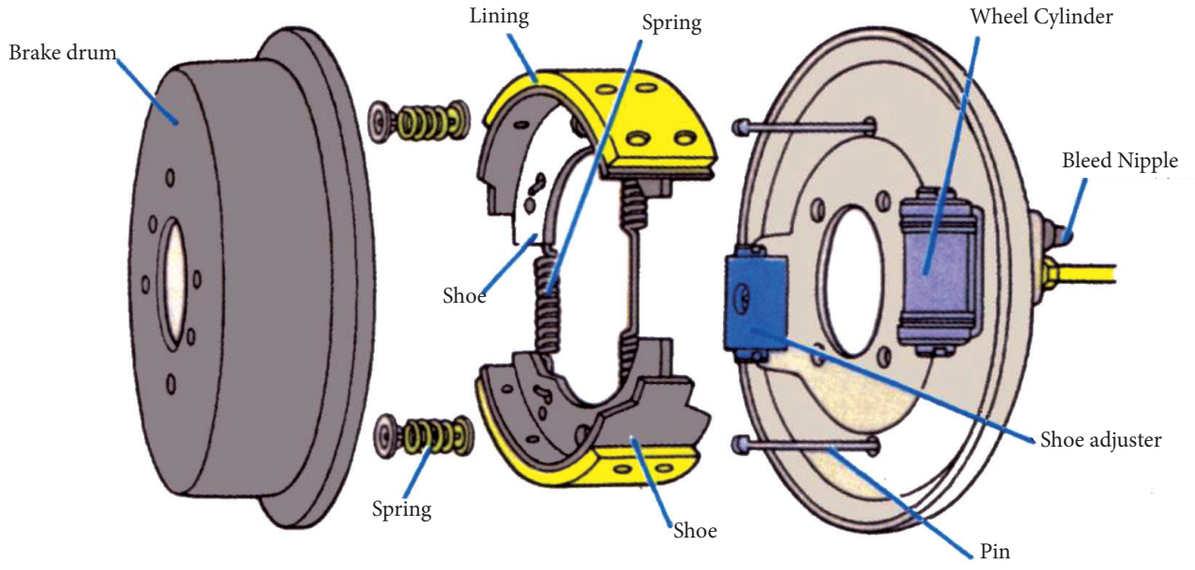

Figure 1.8.11 Braking system

and air. The very important part of an automobile is the braking system that helps to drive and control the speed of the vehicle within safe speed. It is shown Figure 1.8.11.

1.8.12 Wheels and tyres

The wheels help to carry the vehicle's entire weight and to drive the vehicle. The wheels are connected to the front and rear axles of a vehicle. They absorb the vibrations produced from the road and help to keep the tyres soft and smooth.

1.8.13 Electrical system

Electrical system supplies electrical energy which is used to produce the spark for igniting the air fuel mixture in petrol engines, to provide light for the vehicle during night ride, to operate the wiper motor, to light inside the vehicle, to play music and for dashboard lights. It is shown Figure 1.8.13.

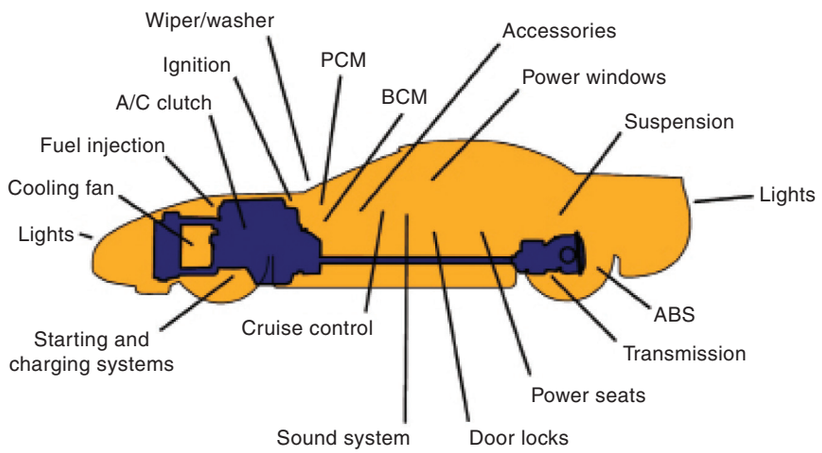

Figure 1.8.13 Basic overview of the electrical system of a modern car

BAE_ENG_Chapter_01.indd 11 01/11/2022 11:38:16 AM

Student Activity

1. Submit a report about the transmitting system by sending the students to the workshop near the school.
2. Each student have to submit a layout of the transmission system.
3. Submit a report about the front engine drive and rear engine drive in the workshops.

Glossary

1.	Transmission	–	கடத்தல்
2.	Gear box	–	பற்சக்கரப்பெட்டி
3.	Universal Joint	–	யுனிவர்சல்இணைப்பு
4.	Air Resistance	–	காற்று எதிர்ப்புத்தடை
5.	Rolling Resistance	–	உருளும்எதிர்ப்புத்தடை
6.	Gradient Resistance	–	ஏற்றத்தடை
7.	Wind Velocity	–	காற்றின்திசைவேகம்
8.	Traction	–	இழுத்தல்

References

1. S.K. Gupta, A Text Book of Automobile Engineering, S. Chand and Company, New Delhi, ISBN 978-93-837-4691-0, First Edition 2014, Reprint 2016.
2. Automobile Engineering, 2nd Edition, Sci Tech Publications (India) Pvt Ltd, 2011. Ramalingam. K.K.
3. Kirpal Singh, Automobile Engineering, Vol 1, Standard Publisher and distributor, ISBN – 13 – 978-8180141966
4. Jack Erjavec- Automotive Technology_ A Systems Approach -Delmar Cengage Learning (2009) ISBN-13: 978-1428311497
5. James D. Halderman, Automotive Technology, Principles, Diagnosis and service, fourth Edition, 2012, Prentice Hall, ISBN - 3: 978-0-13-254261-6
6. K.K.Jain and R.B.Asthana, Automobile Engineering, Tata McGraw-Hill Publishing Company Limited, New Delhi
7. R.K.Rajput, A Text Book of Automobile Engineering, Laxmi Publications, New Delhi.
8. A.K. Babu & Er. Ajit Pal Singh, Automobile Engineering, S.Chand Publishing, New Delhi
9. Internal Combustion Engines by V. Ganesan, Tata McGraw-Hill Education, 2004
10. Automotive Mechanics by William Crouse, Donald Anglin

BAE_ENG_Chapter_01.indd 12 01/11/2022 11:38:16 AM

Webliography

1. http://usciencecompendium.blogspot.com/2014/12/automobile-transmission-system-part-1.html
2. https://www.aeroautoparts.com/advantages-and-disadvantages-of-a-manual-transmission
3. http://what-when-how.com/automobile/traction-and-tractive-effort-automobile/
4. http://www.tezu.ernet.in/sae/Download/transmission.pdf

Evaluation

S2P83

PART - A

One mark questions

Choose the correct answer

1. Power produced from the engine transmits to the rotating wheels by
   a) Gear system
   b) Steering system
   c) Braking system
   d) Transmission system

2. Power is transmitted from engine to the rear axle?
   a) Front engine front wheel drive
   b) Rear engine rear wheel drive
   c) Four wheel drive
   d) Front engine rear wheel drive

3. How many types of vehicles can be divided according to the way in which the engine is located and power transmitting directions to the wheel?
   a) 8
   b) 3
   c) 4
   d) 7

4. Which engine drive provides high mountain traction and road grip?
   a) High speed drive
   b) Medium speed drive
   c) Four wheel drive
   d) Rear engine rear wheel drive

5. Which engine drive provides highest road grip?
   a) Four wheel drive
   b) Rear engine rear wheel drive
   c) Front engine front wheel drive
   d) Front engine rear wheel drive

BAE_ENG_Chapter_01.indd 13 01/11/2022 11:38:16 AM

PART - B

Three mark questions

1. Write the important parts of the transmission system.
2. Write about the types of transmission system.
3. What is mean by Air resistance?
4. What is mean by Rolling resistance?
5. What is meant by Gradient resistance?

PART - C

Five mark questions

1. Write the types of transmission system with its significance and explain any one with neat diagram.
2. Explain automobile vehicle chassis

PART - D

Ten mark questions

1. Explain any one type transmission system with sketch.
2. State the parts of chassis and explain any two parts with sketch.

BAE_ENG_Chapter_01.indd 14 01/11/2022 11:38:16 AM

UNIT 2

Clutch Unit

Contents

2.0 Introduction
2.1 Functions of the Clutch
2.2 Principle of the Clutch
2.3 Qualities of Good Clutch
2.4 Components of Clutch
- 2.4.1 Clutch Plate
- 2.4.2 Clutch Lining
- 2.4.3 Pressure Plate
- 2.4.4 Clutch Spring
- 2.4.5 Release Bearing
- 2.4.6 Clutch Linkage

2.5 Types of Clutch
- 2.5.1 Single Plate Clutch
- 2.5.2 Multi Plate Clutch
- 2.5.3 Diaphragm Clutch
- 2.5.4 Fluid Flywheel
- 2.5.5 Centrifugal Clutch

2.6 Maintenance Methods of Clutch
2.7 Troubleshooting Methods in Clutch

6CH8G

Learning objectives

1. Uses of clutch in automobiles, structure, applications, operating methods, maintenance and troubleshooting methods can know.
2. Find out how the clutch transmits the power from engine to the gear box.

2.0 Introduction

Clutch is the first part of the transmission system. It is mounted between the engine and the gear box. Clutch is a mechanism that helps to rotate the rotation from a shaft to another shaft on the same axis.

2.1 Functions of the Clutch

- When the power from the engine is needed, it will connect and disconnect the gear box.
- When the Engine is not working, it will help to start the vehicle by pushing.

BAE_ENG_Chapter_02.indd 15 01/11/2022 11:40:40 AM

- Used to change gears softly, to stop the vehicle and for Engine idle.

2.2 Principle of the Clutch

Clutch works on the principle of friction. When the rotating disk C connects with disk D, both will start to rotate. This is the basic principle in Clutch.

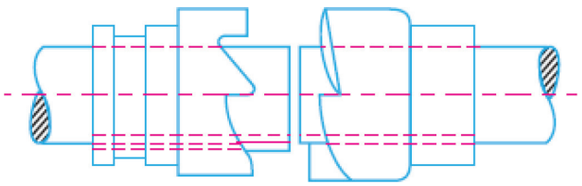

2.3 Qualities of Good Clutch

1. Should have high torque transmission.
2. Should join in step-by-step.
3. Should be a good transfer of heat.
4. Operating balance is required.
5. Should be able to bear the shocks.
6. Should have free pedal play.
7. Should be easy to operate.
8. Should be in simple construction, cheap in cost and high working life.
9. Low space should be adequate.
10. Should have high co-efficient of friction.

2.4 Components of Clutch

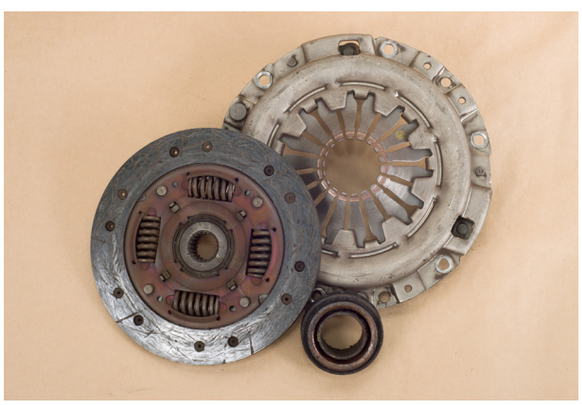

1. Clutch Plate
2. Clutch Lining
3. Pressure Plate
4. Coil Spring
5. Release bearing
6. Clutch linkage

2.4.1 Clutch Plate

Clutch plate should be made of steel. Hub is situated in centre of the clutch plate. Hub consists of splines. Clutch plate has moving capacity. Hub is attached with disk. Disk is surrounded by many cushion springs. Above this, friction lining is attached with rivet or glue. Helical spring is attached in centre of the plate to bear torque. This is called as torsional or damper spring.

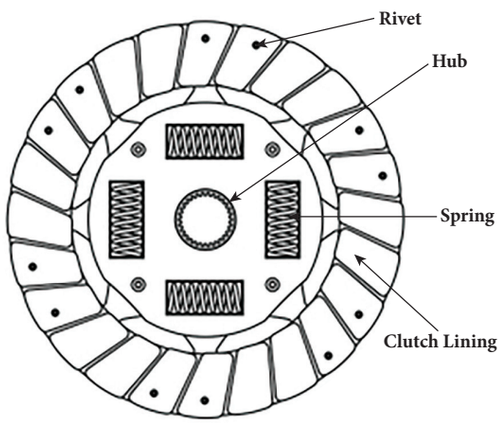

2.4.2 Clutch Lining

The two ends of the clutch lining and clutch plate are attached with the help of rivets or some special glue. The clutch lining is made up of following materials.

1. Asbestos
2. Reybestos
3. Fibre
4. Leather
5. Cork

IPB8C

BAE_ENG_Chapter_02.indd 16 01/11/2022 11:40:42 AM

Types

- Solid Woven Lining types
- Moulded Lining types

Solid Woven lining type

In this type, Clothes are stitched with the suitable thickness.

Moulded lining types

It is formed with the help of asbestos, fibre, glass particles, cloth, metal powder and sticking component with particular pressure.

2.4.3 Pressure Plate

Above clutch plate to form good and equal pressure, true is done at its surface. It will produce friction pressure plate is made with some special type of material which will have the heat resistance capacity.

2.4.4 Clutch Spring

Cushion or Torsion spring is used to bear frictions produced from clutch engage and disengage.

2.4.5 Release Bearing

Clutch housing inside, without any contact with clutch shaft it will move forward and backward. It will press the fingers equally so it is known as Release bearing.

2.4.6 Clutch linkage

Operates release bearing from the clutch pedal with the help of fork is known as clutch linkage. In car it works with the cables and in heavy vehicles, it

DO YOU KNOW?

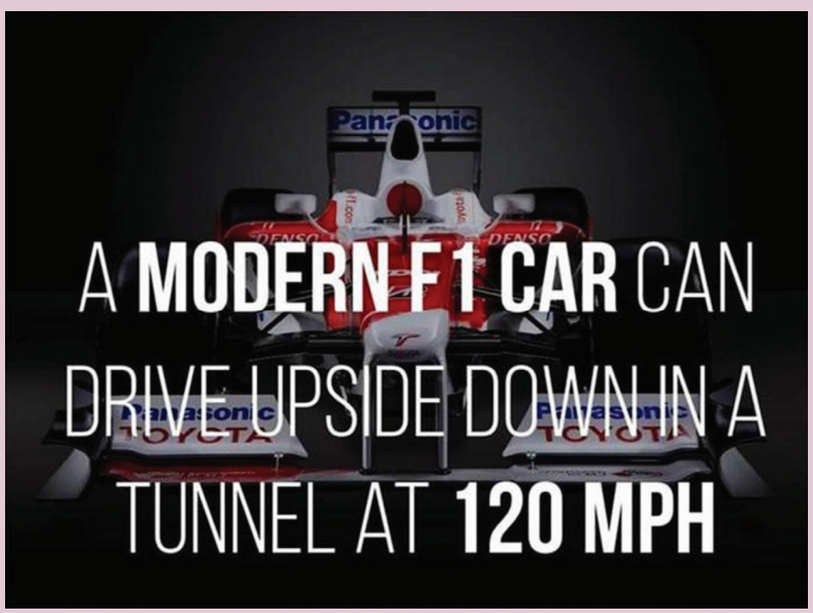

BAE_ENG_Chapter_02.indd 17 01/11/2022 11:40:43 AM

works with the steel rods. It is designed in such a way that it can able to change its length.

2.5 Types of Clutch

1. Single plate clutch
2. Multi plate clutch
3. Diaphragm clutch
4. Centrifugal clutch
5. Hydraulic clutch
6. Fluid flywheel clutch
7. Electric clutch

2.5.1 Single Disc or Plate Clutch

Construction

- Main components of single plate clutch are listed below:

1. Fly wheel
2. Clutch plate
3. Clutch lining
4. Pressure plate
5. Coil spring
6. Release lever
7. Clutch shaft
8. Release lever bearing

- Clutch plate is placed in between fly wheel and pressure plate.
- Centre of clutch plate is attached with clutch shaft.
- Coil spring is placed in between pressure plate and clutch cover.
- Release lever is attached with pressure plate.
- Clutch cover is attached with fly wheel with the help of bolt and nuts.

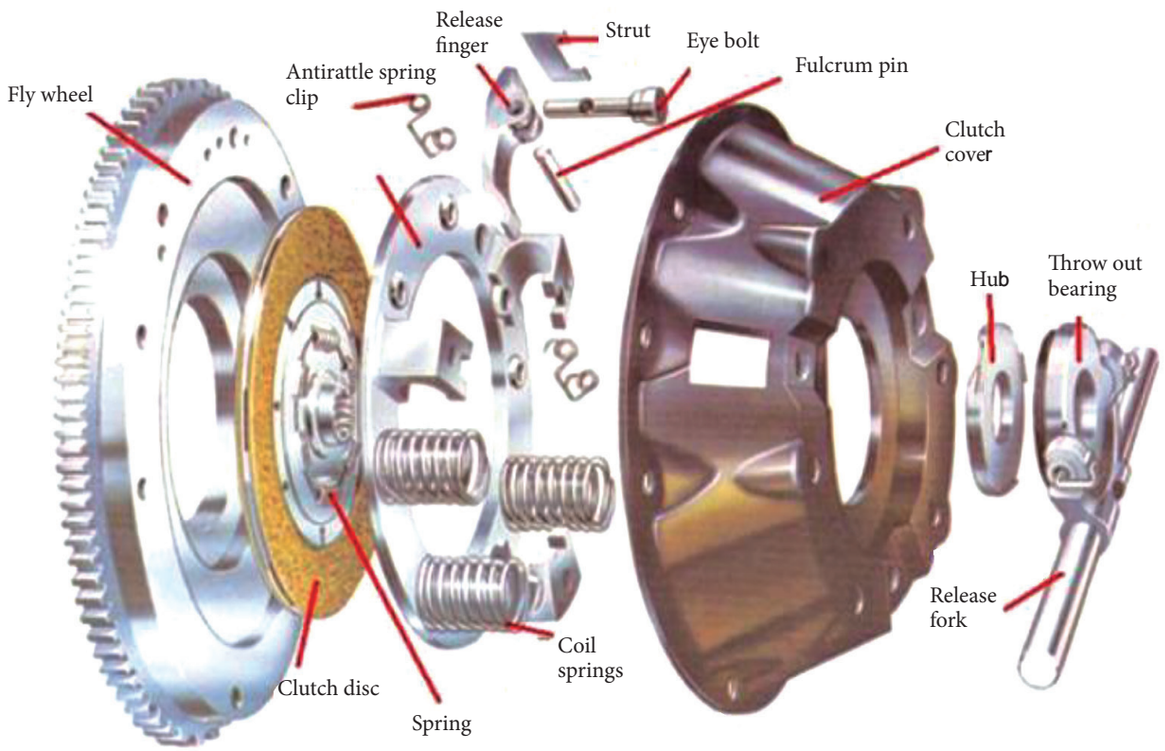

Figure 2.5.1 (a) Single plate clutch

BAE_ENG_Chapter_02.indd 18 01/11/2022 11:40:43 AM

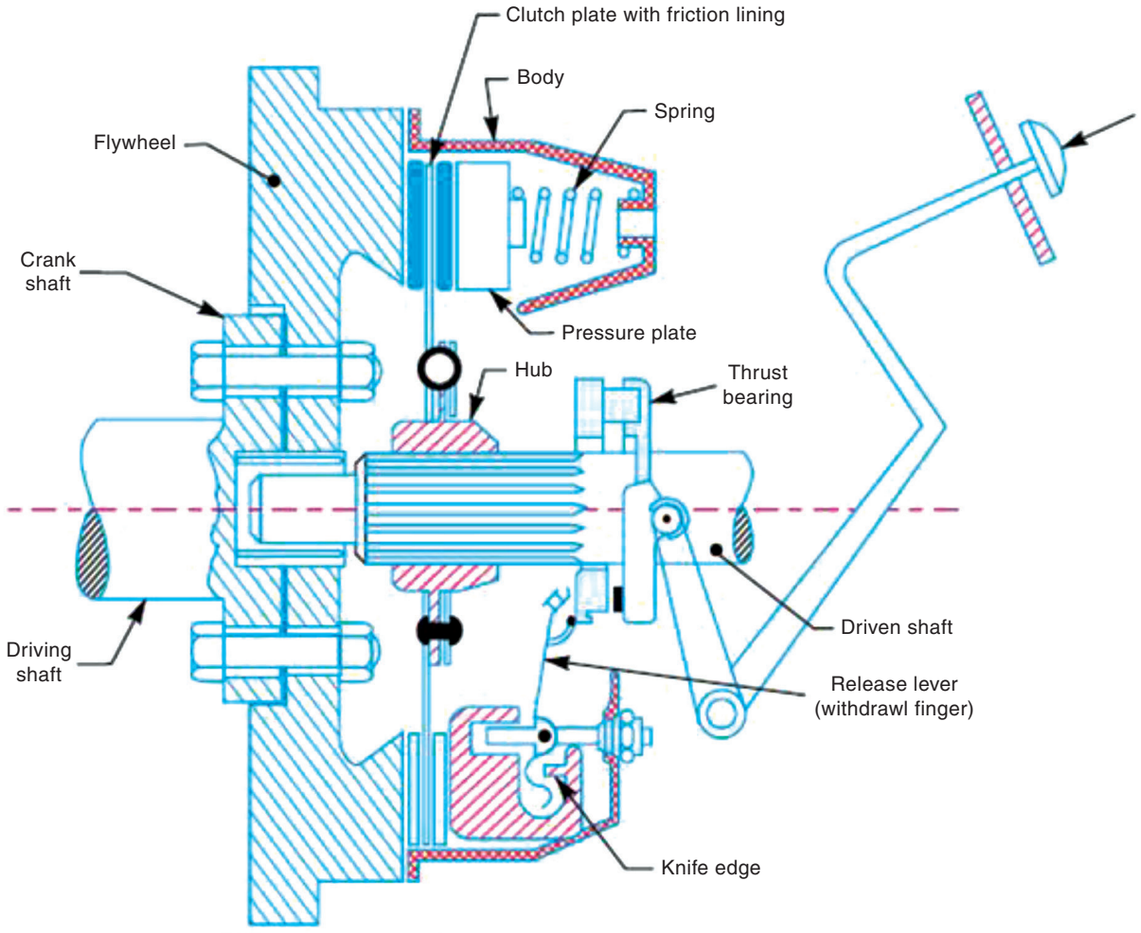

Figure 2.5.1 (b) Single plate clutch

- Single plate clutch is used in heavy vehicles.

Working principle

When clutch pedal is pressed

- When clutch pedal is pressed, release bearing will push the release lever.
- So pressure plate will move backward in opposite to spring force.
- In this stage, a gap will form in between clutch plate and pressure plate.
- Therefore, power from the engine is not transmitted to gear box.
- This is called as clutch disengaged.

When clutch pedal is released

- Pressure plate is pressed by coil spring force.
- So pressure plate connects the clutch plate with the fly wheel.
- Now, power from the engine is transmitted to gear box with the help of clutch shaft.
- Therefore, this is called as clutch engaged.

2.5.2 Multi plate clutch

Construction

- It consists of two or more clutch plates and pressure plates. So, it can able to transmit more power when there is a low space.
- It is used in motor cycles and race cars.

BAE_ENG_Chapter_02.indd 19 01/11/2022 11:40:44 AM

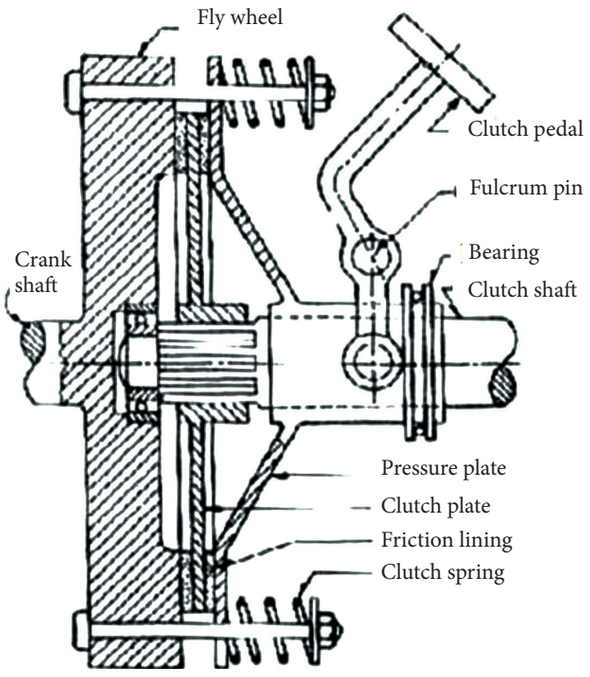

Figure 2.5.1 (c) Single plate clutch

- The centre of clutch plate is attached with clutch shaft.
- Coil spring is placed in between pressure plate and clutch cover.

Working principle

When clutch pedal is pressed

- Release lever is pressed by release bearing.

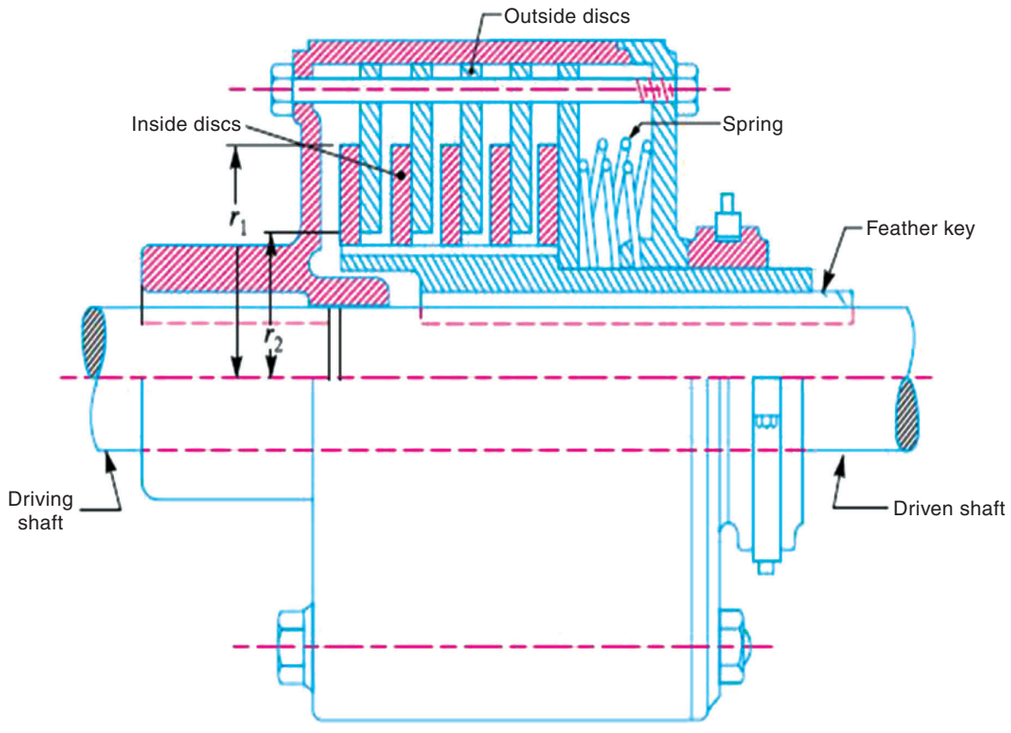

Figure 2.5.2 (a) Multiplate clutch

BAE_ENG_Chapter_02.indd 20 01/11/2022 11:40:44 AM

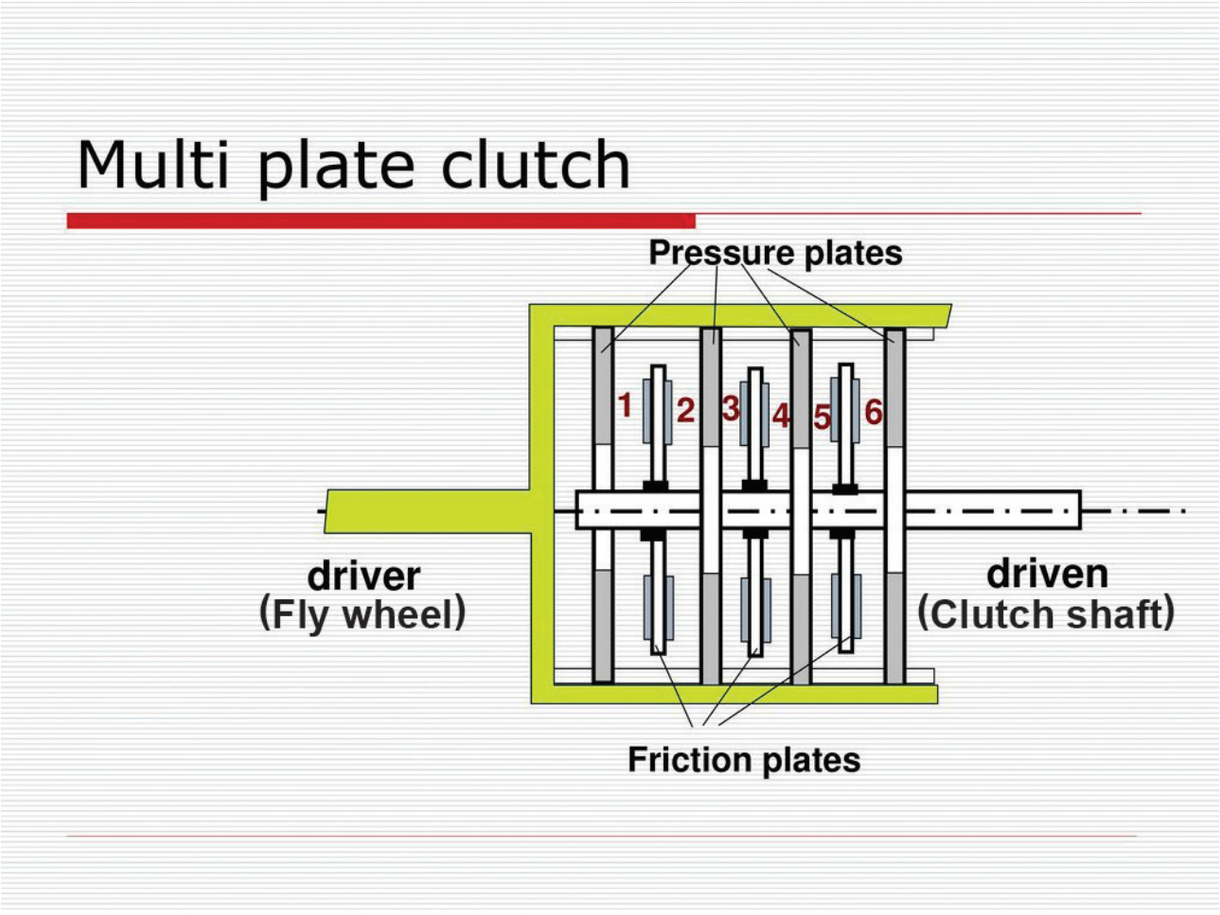

Figure 2.5.2 (b) Multiplate clutch

- So pressure plate is moving backward opposite to coil spring pressure.
- At this stage, a gap will form in between clutch plate and pressure plate.
- So the power from engine is not transmitted to gear box.
- This is called as clutch disengaged.

When clutch pedal released

- Pressure plate is pressed by coil spring force.
- So pressure plate connects the clutch plate with fly wheel.
- Now, engine power is transmitted to gear box.
- This is called as clutch engaged.

Advantages

1. Transmits more torque.
2. Smooth joining
3. Less noise
4. More life.

Disadvantages

1. Not used in heavy vehicles.
2. Difficult in maintenance
3. High initial cost

BAE_ENG_Chapter_02.indd 21 01/11/2022 11:40:44 AM

2.5.3 Diaphragm clutch

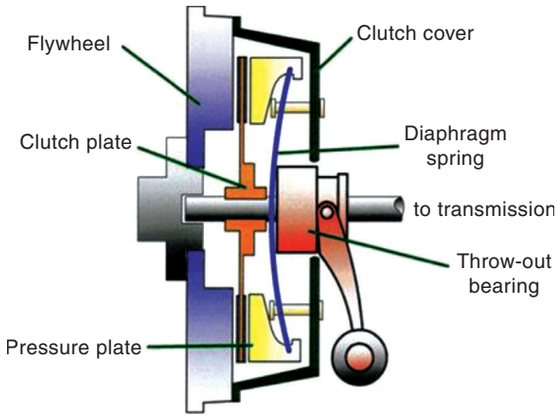

Figure 2.5.3 Diaphragm clutch

Components

1. Flywheel
2. Clutch plate
3. Pressure plate
4. Diaphragm spring
5. Clutch lining
6. Clutch shaft
7. Pivot ring

Construction

- Here instead of coil spring, diaphragm spring is used.
- Clutch plate is placed in between fly wheel and pressure plate.
- The centre of clutch plate is attached with clutch shaft.
- Outside end of the diaphragm spring is attached with with pressure plate by clamp, screw, and clutch cover with two pivot rings.

Working principle

When clutch pedal is pressed

- Thrust bearing is moving forward and presses the centre of diaphragm spring.





BAE_ENG_Chapter_02.indd 22 01/11/2022 11:40:44 AM

- So outside end of the diaphragm spring pulls pressure plate in backward direction.
- Now, a gap is formed in between pressure plate and clutch plate.
- Therefore, a engine power is not transmitted to gear box.
- This is called as Clutch disengaged.

When clutch pedal is released

- Outside end of the diaphragm spring pushes the pressure plate.
- So clutch plate joins with fly wheel.
- Therefore, engine power is transmitted to gear box.

Advantages

1. Transmits more torque.
2. Low maintenance is required.
3. Low space is required.
4. More life.
5. Works smoothly with less noise.

2.5.4 Fluid fly wheel

Components

1. Crank shaft
2. Gear box shaft
3. Pump
4. Turbine
5. Vanes
6. Oil seal
7. Oil

Construction

- Pump is attached with fly wheel, which operates by a component called Driving member.
- Turbine is attached with gear box shaft. This is called as Driven member.
- Inside of pump and turbines, vanes are there. Vanes are filled with oil at a particular level.
- Oil seal is attached to stop the oil leakage.

Operating method

At Idle speed

- When engine rotates with this speed, pump attached with crank shaft operates easily.
- Now due to less centrifugal force, oil will not move fast towards turbine.

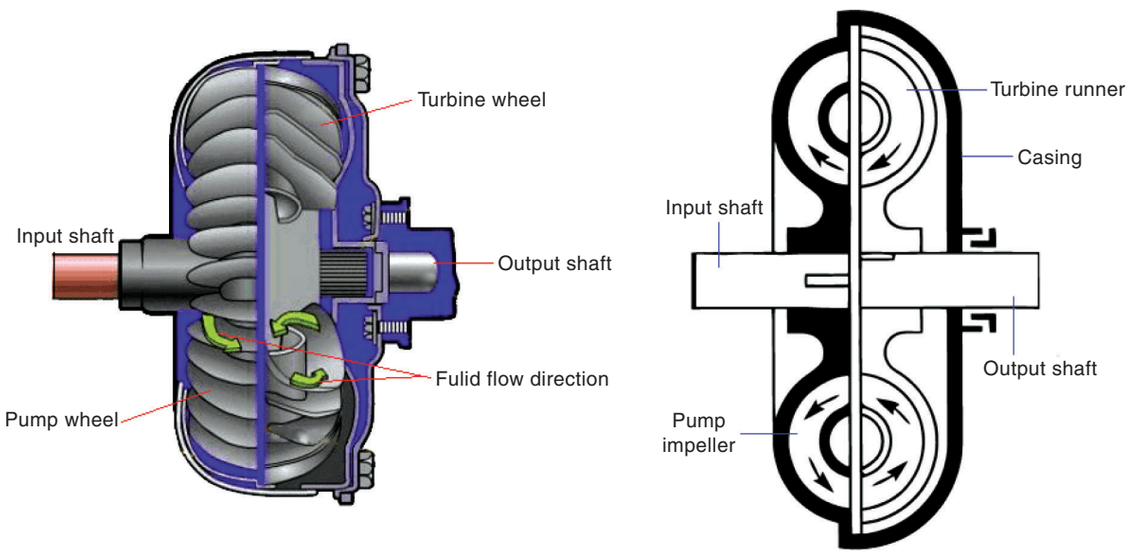

Figure 2.5.4 Fluid fly wheel clutch

BAE_ENG_Chapter_02.indd 23 01/11/2022 11:40:45 AM

- Therefore, turbine will not rotate and engine power is not transmitted to gear box.

At High speed

- When engine rotates with this speed, pump rotates fastly.
- Now due to high centrifugal force, oil will move fast towards turbine blade.
- Therefore, turbine rotates fastly and engine power is transmitted to gear box.

Advantages

1. Engine power transmission takes place without vibration.
2. Easy maintenance.
3. No need of adjustment.
4. No need of clutch pedal to operate this.
5. Simple construction.
6. Works smoothly without noise.
7. More life.
8. Gears cane be changed easily.

Disadvantages

1. In all speed, up to 2% power loss will be there.
2. Clutch will not work properly when leakage of oil.
3. It is suitable for only automatic gear box.

2.5.5 Centrifugal clutch

Construction

- It works under centrifugal force. So it is known as centrifugal clutch.
- Here, pressure plate is attached with Ball weights and Bell crank lever.
- Pressure spring is placed in between clutch plate and pressure plate. Pressure release springs are placed in between fly wheel and clutch plate.
- In this type, there is no clutch pedal.

Working priciple

At Idle speed

- When engine works at idle speed, centrifugal force will not act on ball weights.

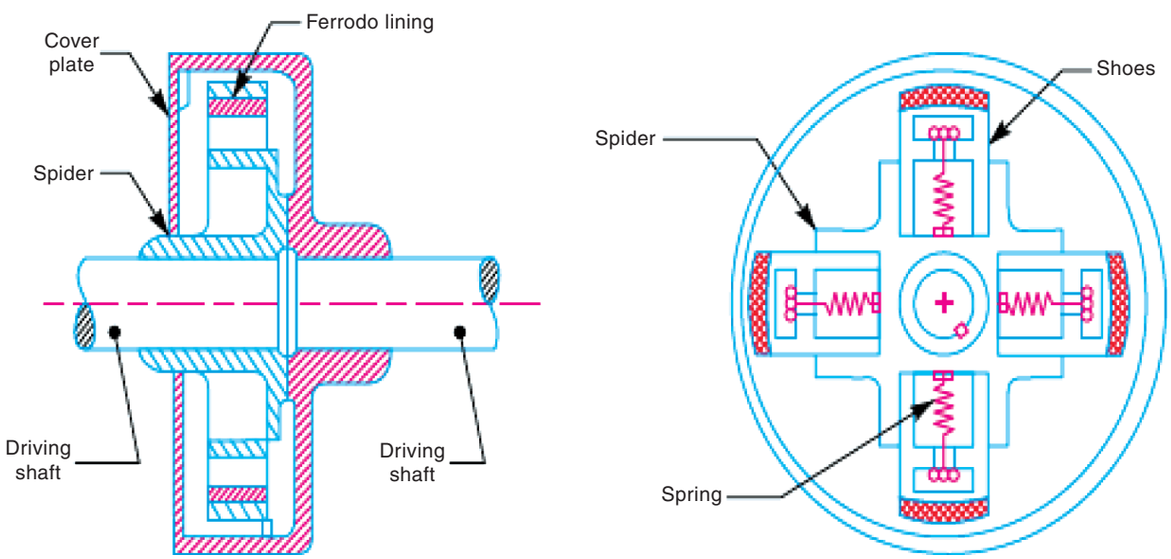

Figure 2.5.5 (a) Centrifugal clutch

BAE_ENG_Chapter_02.indd 24 01/11/2022 11:40:45 AM

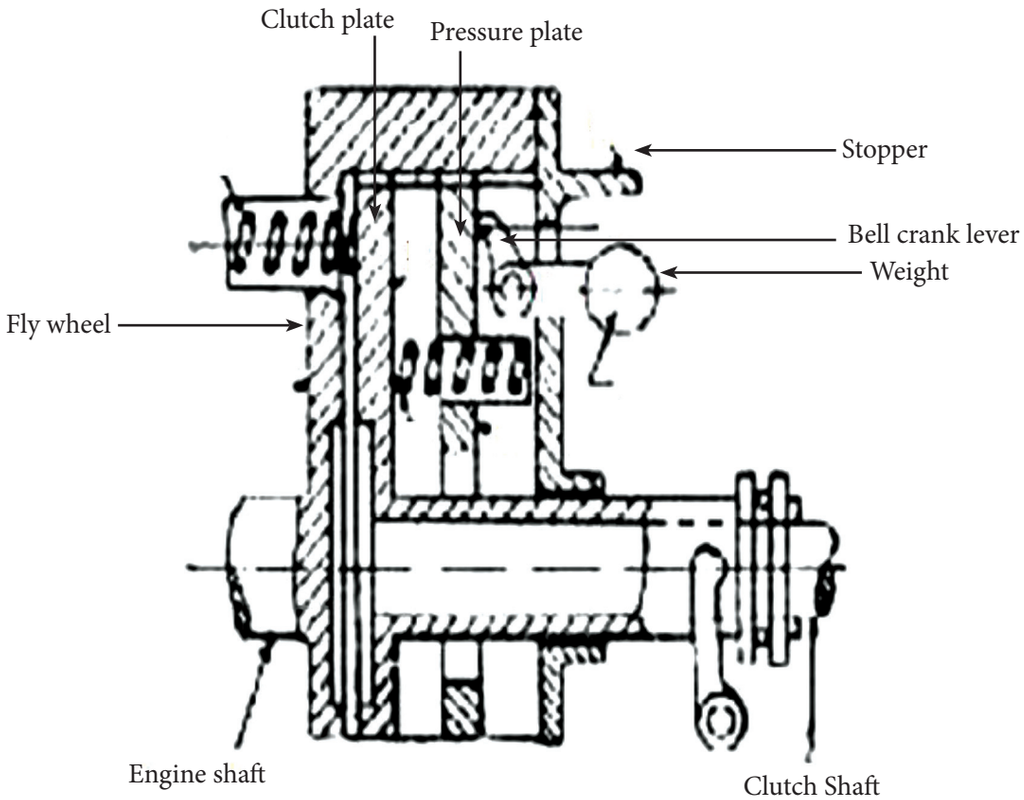

Figure 2.5.5 (b) Centrifugal clutch

- So, bell crank lever with weights will not push pressure plate. Therefore, a gap will form in between pressure plate and clutch plate.
- Now, engine power is not transmitted to gear box.

At high speed

- Due to centrifugal force, ball weight moves and pushes pressure plate with the help of bell crank lever in opposite to pressure spring force.
- Now pressure plate pushes clutch plate with fly wheel. So engine power is transmitted to gear box. This is called as clutch engaged.

Note: when engine speed is more than 1000rpm, clutch will not be disengaged.

2.6 Maintenance methods of clutch

1. Clutch pedal free-play should be checked and changed periodically.
2. Should check and adjust the gap in between clutch plate and pressure plate. (Note: gap should be 0.3 mm to 0.5 mm)
3. Clutch lining should be checked in periodically. If any problem finds, it should be cured.
4. Should not operate the clutch by keeping legs continuously.
5. Clutch surfaces should be free from oil and grease.
6. Clutch adjustment should be done periodically.
7. Clutch linkages should be checked periodically.

BAE_ENG_Chapter_02.indd 25 01/11/2022 11:40:45 AM

2.7 Troubleshooting methods in clutch

1. Clutch slip

S. No	Troubles	Troubleshooting methods
1	Oil or grease in clutch plate	Clean it
2	Clutch lining damage	Should change to new
3	Pressure spring weakness	Should change
4	Pressure plate broken	Should change
5	Release lever broken	Should change

2. Clutch dragging

S. No	Troubles	Troubleshooting methods
1	High free-play in clutch pedal	Should repair
2	Wrong clutch adjustment	Adjust properly
3	No proper release lever adjustment	Adjust properly
4	Clutch plate broken	Should change to new
5	Spring weakness	Should change

3. Clutch noise

S. No	Troubles	Troubleshooting methods
1	Bearing broken	Should change
2	Lining broken	Should change to new
3	Clutch shaft broken	Should change to new
4	Release bearing damage	Should replace
5	Springs broken	Should change to new

4. Clutch plate rapid wear

S. No	Troubles	Troubleshooting methods
1	Over weight in vehicle	Should maintain weight up to maximum limit
2	Always keeping legs in clutch pedal	Should ignore
3	Low quality clutch lining	Should use good quality clutch lining
4	No proper clutch adjustment	Adjust properly

Student Activity

1. To submit the report about the type, construction and working of clutch used in any two types of two wheelers which are used in daily life.
2. To collect the vehicle owners manual for any two types of two wheelers and four wheelers and also collect the types of clutch used, construction, working, maintenance and submit the report with neat sketches.
3. Ask the students to visit the nearby heavy vehicle work shop and collect the report about the construction, maintenance and adjustments of clutch used in any two types of heavy vehicles.

BAE_ENG_Chapter_02.indd 26 01/11/2022 11:40:45 AM

Glossary

1.	Friction	–	உராய்வு
2.	Single Plate Clutch	–	ஒரு தட்டு கிளட்ச்
3.	Centrifugal Clutch	–	மைய விலக்கு கிளட்ச்
4.	Engaged	–	இணைந்த நிலை
5.	Disengaged	–	இணையாத நிலை
6.	Fibre	–	நார்
7.	Driving Member	–	இயக்கும் பாகம்
8.	Driven Member	–	இயக்கப்படும் பாகம்
9.	Multiplate Clutch	–	பலதட்டு கிளட்ச்
10.	Automatic Clutch	–	தானியங்கி கிளட்ச்
11.	Co – Efficient of Friction	–	உராய்வு குணகம்
12.	Metal Powders	–	உலோகத் துகள்கள்
13.	Linkages	–	இணைப்புகள்
14.	Fluid Flywheel	–	திரவபிளைவீல்
15.	Pressure Plate	–	அழுத்தும் தட்டு
16.	Diaphragm Clutch	–	இடைத்திரை கிளட்ச்
17.	Oil Seal	–	எண்ணெய்க் கசிவு நீக்கி
18.	Splines	–	வரிப்பள்ளங்கள்

References

1. S.K. Gupta, A Text Book of Automobile Engineering, S. Chand and Company, New Delhi, ISBN 978-93-837-4691-0, First Edition 2014, Reprint 2016.
2. Automobile Engineering, 2nd Edition, Sci Tech Publications (India) Pvt Ltd, 2011. Ramalingam. K.K.
3. Kirpal Singh, Automobile Engineering, Vol 1, Standard Publisher and distributor, ISBN – 13 – 978-8180141966
4. Jack Erjavec- Automotive Technology_ A Systems Approach -Delmar Cengage Learning (2009) ISBN-13: 978-1428311497
5. James D. Halderman, Automotive Technology, Principles, Diagnosis and service, fourth Edition, 2012, Prentice Hall, ISBN - 3: 978-0-13-254261-6
6. K.K.Jain and R.B.Asthana, Automobile Engineering, Tata McGraw-Hill Publishing Company Limited, New Delhi
7. R.K.Rajput, A Text Book of Automobile Engineering, Laxmi Publications, New Delhi.
8. A.K. Babu & Er. Ajit Pal Singh, Automobile Engineering, S.Chand Publishing, New Delhi
9. Internal Combustion Engines by V. Ganesan, Tata McGraw-Hill Education, 2004
10. Automotive Mechanics by William Crouse, Donald Anglin

BAE_ENG_Chapter_02.indd 27 01/11/2022 11:40:45 AM

Webliography

1. http://learnmech.com/introduction-to-clutch-clutch-types/
2. http://www.industrialfriction.com/clutch-lining/
3. http://auto-hubs.blogspot.com/2015/10/types-of-friction-material-used-for-making-clutch-plate-friction-lining.html
4. https://haynes.com/en-us/tips-tutorials/troubleshooting-common-clutch-issues-and-causes
5. https://www.yourmechanic.com/article/how-to-test-your-clutch-by-eduardo-ruelas

Evaluation

KG7QT

PART - A

One mark questions

Choose the correct answer

1. In transmission system, the clutch is placed in.
   a) Second Place
   b) First Place
   c) Fourth Place
   d) Sixth Place

2. How many types of multiplate clutch?
   a) 1 b) 2
   c) 3 d) 4

3. Where the clutch lining is fixed?
   a) Both Edges Of The Clutch Plate
   b) Fly Wheel
   c) Pressure Plate
   d) Both B And C

4. In which speed the disengagement is impossible in centrifugal clutch?
   a) 600 rpm
   b) 800 rpm
   c) 900 rpm
   d) 1000 rpm

5. The clutch works on the principle of.
   a) Lever Principle
   b) Pascal's Law
   c) Friction
   d) Faraday's law

6. In this clutch, there is no clutch pedal?
   a) Single Plate Clutch
   b) Centrifugal Clutch
   c) Multiplate Clutch
   d) Diaphragm Clutch

7. Name the part which is static part in fluid flywheel?
   a) Driving Member
   b) Driven Member
   c) Flywheel
   d) None of the Above

8. When the clutch cover assembly rotates, all clutch parts are.
   a) Rotates With Assembly
   b) Static Position
   c) Rotates Separately
   d) None Of The Above

BAE_ENG_Chapter_02.indd 28 01/11/2022 11:40:45 AM

9. Under the following, which type of clutch works smoothly.
   a) Cone Clutch
   b) Multiplate Clutch
   c) Single Plate Clutch
   d) Fluid Fly Wheel

10) Multi plate clutch is used in.
   a) Two Wheeled Vehicles
   b) Four Wheeled Vehicles
   c) Six Wheeled Vehicles
   d) Three Wheeled Vehicles

PART - B

Three mark questions

1. What are the functions of clutch?
2. What are the materials used to make clutch linings ?
3. What are the merits of diaphragm clutch?
4. What are the reasons for clutch noise?
5. What is clutch plate?
6. How many types of multiplate cluth? Give the types.
7. Write the reasons for clutch slip.
8. Write any three types of clutch.
9. What are the troubles in clutch?
10. Give the location of clutch.

PART - C

Five mark questions

1. Draw and explain about working principle of clutch.
2. Draw and mark the parts of diaphragm clutch.
3. Tabulate the trouble shooting of clutch.
4. List out the merits and demerits of fluid flywheel.
5. Draw and mark the parts of clutch plate.

PART - D

Ten mark questions

1. Draw and explain about single plate clutch.
2. Explain the construction and working of multiplate clutch.
3. Draw and explain about centrifugal clutch.
4. Tabulate the common trouble shooting of clutch.

BAE_ENG_Chapter_02.indd 29 01/11/2022 11:40:45 AM

UNIT 3

Gear Box



HEXU9

Contents

3.0 Introduction
3.1 Gear Box Location
3.2 Gears
  3.2.1 Types Of Gears
3.3 Needs of the Gear Box
3.4 Gear Box Operating Principle
3.5 Types Of Gear Boxes
  3.5.1 Sliding Mesh Gear Box
  3.5.2 Constant Mesh Gear Box
  3.5.3 Synchromesh Gear Box
  3.5.4 Synchronizing Unit
3.6 Properties Of Gear Box
3.7 Gear Ratio
3.8 Overdrive
3.9 Parts Of The Gear Box
  3.9.1 Gear Box Casing
  3.9.2 Gear Box Input Shaft
  3.9.3 Lay Shaft
  3.9.4 Gear Box Output Shaft
  3.9.5 Reverse Gear Shaft
  3.9.6 Speedometer Drive
  3.9.7 Gear Selector Mechanism
3.10 Gear Box Maintenance
3.11 Transfer Case

Learning objectives

1. Understanding different types of gear boxes used in the automobile vehicle.
2. Understanding different gear teeths are used in gear boxes.
3. Understanding the problems occurred in gear boxes and methods to rectify those problems.

BAE_ENG_Chapter_03.indd 30 01/11/2022 11:43:24 AM

3.0 Introduction

The road conditions are not uniform whenever we are in travel in the vehicle. Moreover we do not drive the vehicle always at the same speed. The vehicle must be operated at lower speed when it needs more pulling power. Moreover based on the operating conditions, the vehicle requires different speed and torque. To perform this, a box containing different gears, shafts and bearings is required. This box is called as the gear box. It can be also called as teeth wheel box. By using this box, the driver can achieve different speeds and torques for a vehicle. Gear box is the one which comprises of various teethed gears for different vehicle speed conditions.

3.1 Gear box location

Gear box is located at the second place of the vehicle's transmission system. In the vehicle after the engine, clutch is located. After the clutch gear box is located. It is located in between the clutch and the propeller shaft.

3.2 Gears

The commonly used gears and their arrangements can be seen in this section. With a help of teethed wheels we can transmit the energy in rotational, parallel and in perpendicular directions. In machines gears are used in places wherever the transmission of rotational force is taking place. Moreover the gears are used to transmit the rotational force without any slip. It is used in places where there is a small distance for transmitting the rotational force (torque).

3.2.1 Types of gears

Gears are of many different types. The following are some of the important gears

1. Spur gear
2. Helical gear
3. Double helical gear
4. Bevel gear
5. Rack and pinion gear
6. Worm and worm gear
7. Internal gear
8. Sprocket wheel

3.2.1.1 Spur gear

It is like a circular shaped one made on a cylindrical metal having teeth cut in parallel to the axis of the cylinder. It is called as spur gear.



Figure 3.2.1.1 Spur gear

This gear is used to transmit the rotary power only between two parallel shafts. It is capable of transmitting moderate force and speed. A smaller gear is called as pinion. Normally in gear box this type of gear is used for first and reverse gear speed operations.

BAE_ENG_Chapter_03.indd 31 01/11/2022 11:43:24 AM

3.2.1.2 Helical gear

It is also a circular shaped metal made on a cylindrical metal having the teeth cut not parallel to the axis but in helical shaped cut at certain angle inclined to the cylinder's axis. This type of gear is called as the helical gear.



Figure 3.2.1.2 Helical gear

We can transmit the rotational power to two shafts which are either parallel or non parallel through the helical gear. Compared to straight spur gears more power can be transmitted through helical gears. This type of gear is used in synchromesh gear box and constant mesh gear box.

3.2.1.3 Bevel gear

In this gear the teeth are cut on the top surface of the shaft in tapper. This type of gear is generally used to connect the shafts which are perpendicular to each other and transmit the power in the perpendicular i.e. at 90° angle direction. Bevel gear is capable of withstanding more power than other gears. The bevel gear is used in differential, pinion, crown, wheel, planet and sun gears.



Figure 3.2.1.3 Bevel gear

3.2.1.4 Rack and pinion gear

In this arrangement teeth are cut on a long flat metal bar called as rack. A small wheel called as pinion is in mesh with rack. In this way the rotating power of the pinion is transformed into a straight line or reciprocating motion. This type of gears are used in the gear boxes in the steering system and in many mechanical machines.



Figure 3.2.1.4 Rack and pinion gear

3.2.1.5 Worm and worm gear

It is used to transmit the rotational power by connecting two shafts that are

BAE_ENG_Chapter_03.indd 32 01/11/2022 11:43:25 AM

perpendicular to each other. The gear which looks like a spur gear is called as the worm. The small shaft with the single start thread or multi start thread cut made on it is called the worm shaft. This type of gear is used in places where high speed reduction and high power transmission are obtained. It is used in steering gear box in automobiles.



Figure 3.2.1.5 Worm and worm gear

3.2.1.6 Double helical gear or herringbone gear

On the circular periphery of the cylindrical metal teeth are cut in the shape of the English letter "V". This gear is called as double helical gear or herringbone gear. This type of gear is used where more rotational power (torques) is transmitted.

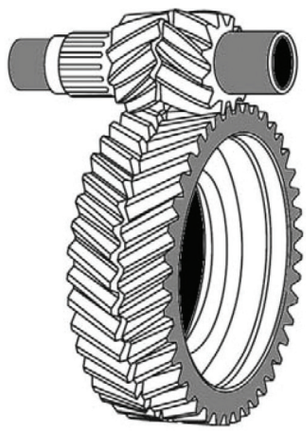

Figure 3.2.1.6 Double helical gear of herringbone gear

3.2.1.7 Internal gear

The internal gear is the one in which the teeth are cut internally on the inner circular metal pipe. This is called as the internal gear. This gear could transmit more power in short places. They are strong in structure. They are used in a small mechanisms and tractor mechanism.

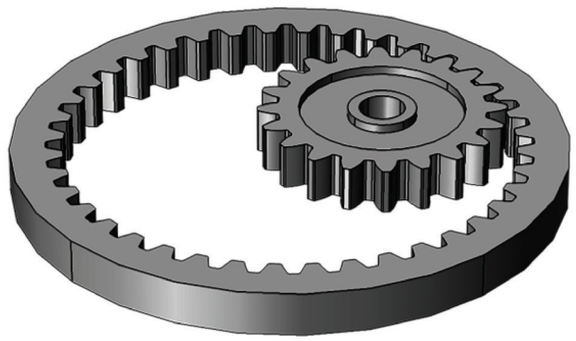

Figure 3.2.1.7 Internal gear

3.2.1.8 Sprocket wheel

On a rounded metal wheel plate teeth are cut outside. This wheel is not in direct contact with the other wheel. In between the two wheels a chain is placed and the rotational power is transmitted through the chain. It is used in timing gears. Moreover it is also used in motor cycles.



Figure 3.2.1.8 Sprocket wheel

BAE_ENG_Chapter_03.indd 33 01/11/2022 11:43:27 AM

3.3 Needs of gear box

1. For reducing the engine speed and increasing the torque.
2. For reducing the engine torque and increasing speed.
3. For the selection of speed levels according to the driver's requirement.
4. For pushing the vehicle in the backward direction.
5. For neutralizing the vehicles when there is no need to transmit the engine power.

3.4 Principle of gear box mechanism

Gear box works on the principle of lever mechanism.

3.5 Types of gear box

The following are the gear boxes used in automobiles,

1. Sliding mesh gear box
2. Constant mesh gear box
3. Synchromesh gear box
4. Epicyclic gear box
5. Automatic gear box

There are many types of gear boxes available. The important gear boxes are discussed below.

3.5.1 Sliding mesh gear box

Sliding mesh gear box was used in earlier day's vehicles. Figure 3.5.1 presents the details of the sliding mesh gear box. In this gear box spur gears are present. This box is suitable for heavy vehicles. By sliding the gears this type of gearboxes move the gears and mesh them and hence it is called as sliding mesh gear box.

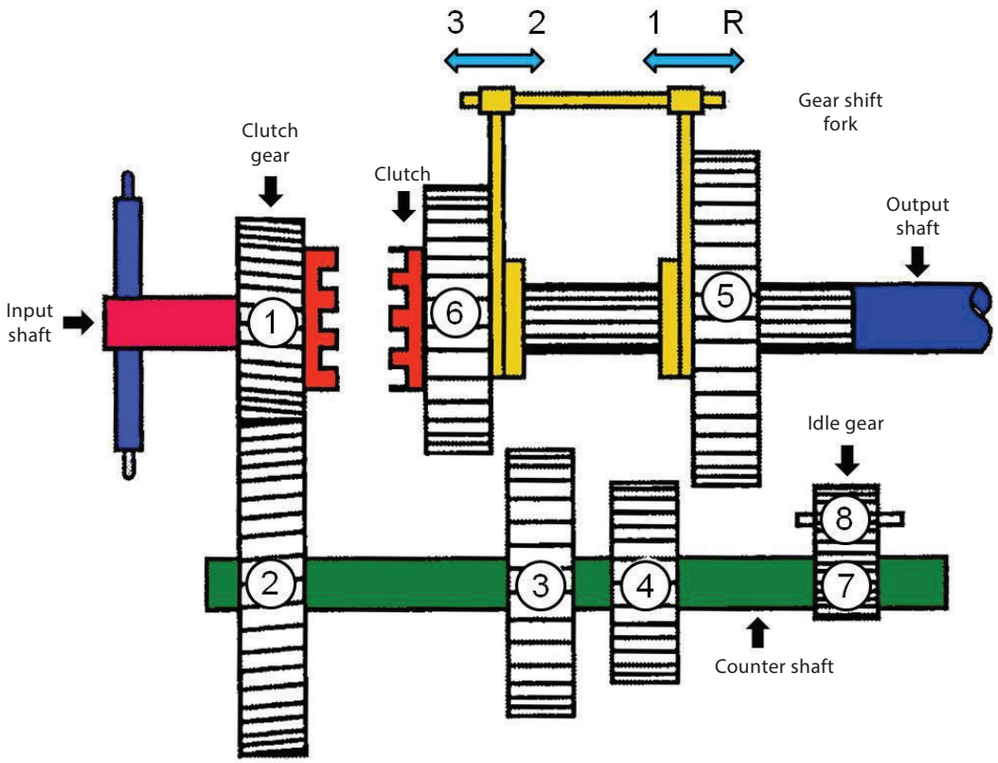

Figure 3.5.1 Sliding mesh gear box

BAE_ENG_Chapter_03.indd 34 01/11/2022 11:43:27 AM

DO YOU KNOW?

An exciting car fact is that cars that do not require drivers should be on the roads by 2020. Google has already developed a driverless car, and many other prototypes are in the works. It is believed that these driverless cars will reduce the frequency of accidents, and will reduce the number of vehicles needed on the road.





BAE_ENG_Chapter_03.indd 35 01/11/2022 11:43:29 AM

Construction

In the gear box, lay shaft or counter shaft is present. This shaft is supported by the bearings in the gearbox. The gear teeth are fixed as stationary in this lay shaft. In the main shaft, splines are made in such a way that the gears are free to move on the slots. The gear teethed wheel (1) in the clutch shaft is always in mesh with the gear in the lay shaft wheel (2). The gear (7) in the lay shaft is always in mesh with the idler gear (8). A three speed sliding mesh gear box is shown in Figure 3.5.1.

Working principle

a) Neutral position

The gear teeth (1) in the input (clutch) shaft is in mesh with the counter shaft gear 2. Hence the counter shaft rotates. However the gears (3 or 4) are not in mesh with the output shaft gears (5 or 6) as shown in Figure 3.5.1.1. Hence the power will not be transmitted to the output shaft. This condition is called as neutral position.

b) First gear

The gear (1) in the clutch shaft is in mesh with the gear in the counter shaft (2). As the gears 3 and 4 are in the counter shaft they also rotate. When the gear shift fork is moved towards left as shown in Figure 3.5.1.1 to engage the gear 5 in the output shaft with the gear 4 in the lay shaft, then the output shaft rotates. The rotary power is now transmitted to the output shaft from gear 1-2-4-5. Now we can get first gear ratio 3:1.

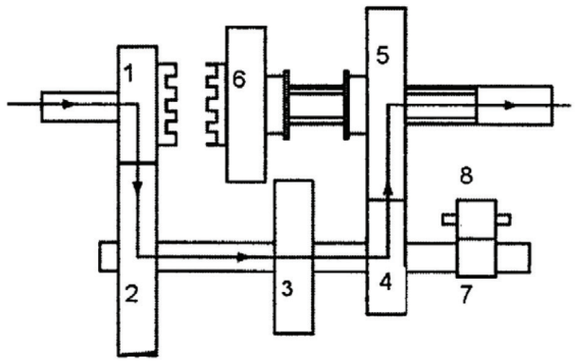

Figure 3.5.1.1 First gear power transmission

c) Second gear

During second gear, the gear shift fork is moved right as shown in Figure 3.5.1.2 to mesh the gear 6 in the output shaft with gear 3 in the lay shaft gear 1, 2, 3 and 6 will get contact and rotate. Now the power is transmitted from the gear 1-2-3-6. Now the speed becomes more than the first gear and the gear ratio of 2:1 is achieved.

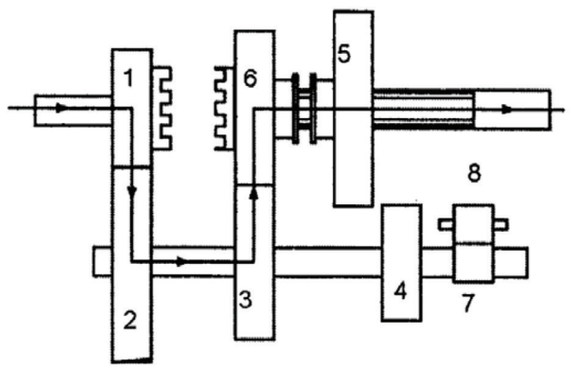

Figure 3.5.1.2 Second gear power transmission

d) Third gear

Dog Clutch is located on the gear 1 in the input (clutch) shaft and the gear 6 in the output shaft as shown in

BAE_ENG_Chapter_03.indd 36 01/11/2022 11:43:31 AM

Figure 3.5.1.3. Now by moving the gear shift fork on the left as shown in Figure the dog clutch is allowed to mesh with the dog clutch in the clutch shaft.

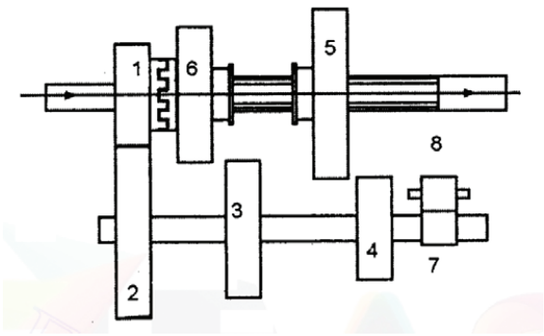

Figure 3.5.1.3 Third gear power transmission

Now the output shaft rotates at the speed same as the clutch (main) shaft. This is the maximum speed and the gear ratio in this condition is 1:1. The rotational power is now directly transmitted from the clutch shaft to the output shaft.

e) Reverse gear

For reverse gear, the gear shift fork is moved towards the right direction as shown in the Figure 3.5.1.4. Hence the gear 5 in the output shaft is in mesh with the gear 8 in the lay shaft which is the idler gear. Now the power transmission is from gear 1-2-7-8-5 to the output shaft.

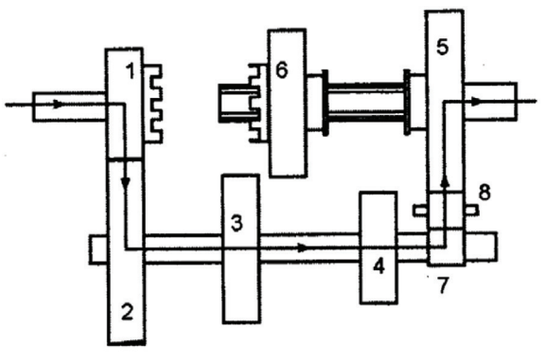

Figure 3.5.1.4 Reverse gear power transmission

Advantages of sliding mesh gearbox

1. Simple in construction
2. Simple in maintenance
3. Suitable for heavy vehicles
4. Low cost
5. Higher mechanical efficiency
6. Production cost is low

Disadvantages

1. Gear changing is difficult
2. Noisy in operation
3. Experience is required for changing gear
4. The edges of teeth wear rapidly.

3.5.2 Constant mesh gear box

In constant mesh gear box the teeth in the main shaft and lay shaft are always in constant mesh with each other. Hence it is called as constant mesh gear box. Helical gears are used in this type of gear box. The gear arrangements in the constant mesh gear box can be seen in Figure 3.5.2.

Construction

In the constant mesh gear box the gears 6, 7 and 8 in the output shaft are always in mesh with the gears 5, 4 and 3 in the lay shaft. In the clutch shaft and in the lay shaft there are gears 1 and 2 respectively which are always in mesh with each other. The gears in the main shaft are supported by bushes. Gear 5 in the lay shaft is in mesh with an idler gear. After the clutch gear in the clutch shaft and before the reverse gear in the main shaft there are dog clutches (D_2 and D_1 respectively) present. These dog clutches

BAE_ENG_Chapter_03.indd 37 01/11/2022 11:43:31 AM

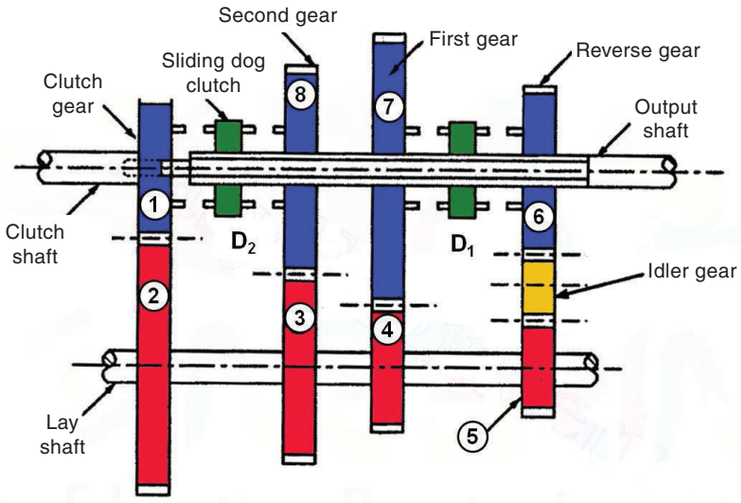

Figure 3.5.2 (a) Gear arrangements in the constant mesh gear box

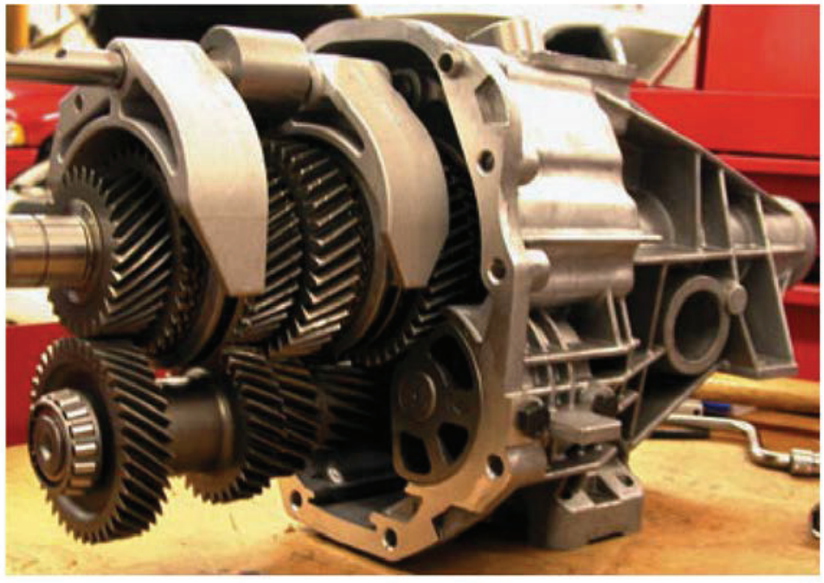

Figure 3.5.2 (b) Constant mesh gear box

are allowed to move on the slots made on the main output shaft. All the shafts in the gear box are supported by the bearings in the housing.

Working principle

Neutral position

During neutral condition both the dog clutches (D_1 and D_2) are not in mesh with any gears as shown in Figure. All gears in the shafts 1,2 & 3,4 & 5,6 & 7,8,9 rotate. However the main output shaft does not rotate as the dog clutches are not in engagement with any of the gears. Hence rotational power is not transmitted.

First gear

By actuating the gear shift lever, the dog clutch D_1 is moved towards left

BAE_ENG_Chapter_03.indd 38 01/11/2022 11:43:31 AM

side to engage gear 7 in the main shaft as shown in Figure. Now the rotational power is transmitted to the main shaft through the dog clutch. Now the speed is low. The power transmission from the clutch shaft to the output shaft is by gear1-2 is means rotational power is transmitted to main shaft by 1-2-4-7-D_1.

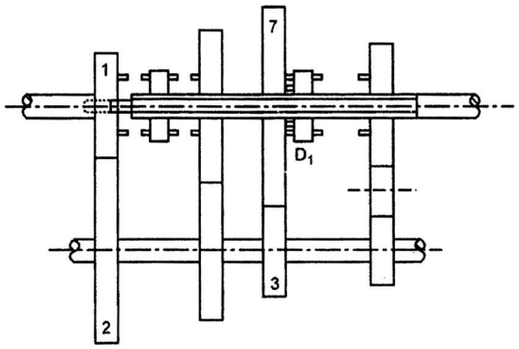

Figure 3.5.2.1 Power transmission in first gear

Second gear

For obtaining the second gear, by actuating the gear shift lever, the dog clutch D_2 is moved towards right as shown in Figure to engage the gear 8 in the output main shaft. Now the rotational power is transmitted to the main shaft through the dog clutch D_2. Now the speed of the main shaft is higher than the speed of the first gear. The power transmission from the clutch shaft to the output shaft is through the gears1-2-3-8-D_2.

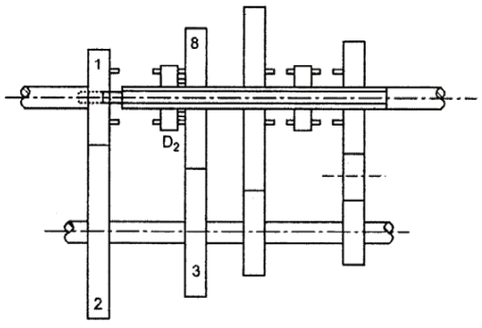

Figure 3.5.2.2 Power transmission in second gear

Third gear

To achieve the third gear the dog clutch D_2 is moved left to engage with the clutch shaft gear directly. Now the output shaft rotates at the speed same as the clutch shaft speed. The rotational power is transmitted to the main shaft directly through the gear1-D_2.

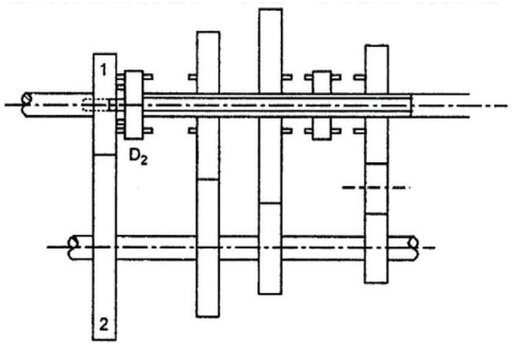

Figure 3.5.2.3 Power transmission in third gear

Reverse speed

To obtain the reverse gear, the dog clutch D_1 is actuated to move right towards the reverse gear 6 to engage as shown in Figure 3.5.2.4. As the idler gear is placed between the gears 5 in the lay shaft and 6 in the main shaft the idler gear changes the direction of rotation of the gear 6 in the main shaft. Now the vehicle moves in the reverse direction. The power transmitted from the cluth shaft to the main shaft is through gears 1-2-5-Idler-6-D_1.

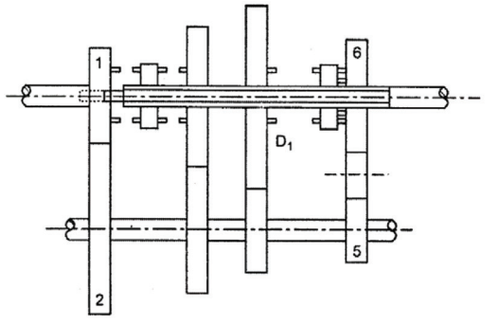

Figure 3.5.2.4 Power transmission in reverse gear

BAE_ENG_Chapter_03.indd 39 01/11/2022 11:43:32 AM

Advantages of constant mesh gear box

1. Gear changing is simple
2. Less noise
3. Less chance for the teeth of the gears to break up.
4. Smoothness in operation
5. Low maintenance

Disadvantages

1. For changing gears from one speed to other speed, double de clutching has to be done.
2. More wear
3. Possibility of wear in dog clutch.

3.5.3 Synchromesh gear box

Synchromesh gear box is similar in construction as constant mesh gear box but differs slightly. Instead of dog clutch used in constant mesh gear box, a synchronizing unit is used in synchromesh gear box. In the synchromesh mesh gear box the gears 6, 7 and 8 in the output shaft are always in mesh with the gears 5, 4 and 3 in the lay shaft. In the clutch shaft and in the lay shaft there are gears 1 and 2 respectively which are always in mesh with each other. The gears in the main shaft are supported by bushes. Gear 5 in the lay shaft is in mesh with an idler gear. After the clutch gear in the clutch shaft and before the reverse gear in the main shaft there are synchronizers (S_2 and S_1 respectively) present. These synchronizers are allowed to move on the slots made on the main output shaft. All the shafts in the gear box are supported by the bearings in the housing.

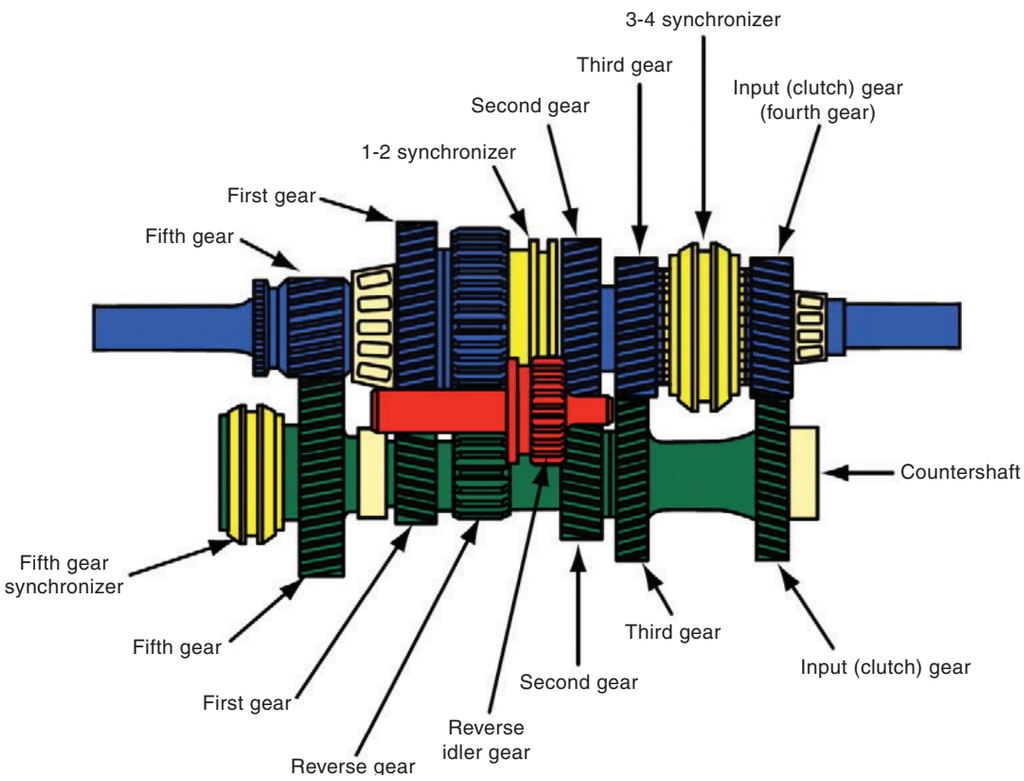

Figure 3.5.3 (a) A view of gear arrangements of a 5 speed synchromesh gear box

BAE_ENG_Chapter_03.indd 40 01/11/2022 11:43:32 AM

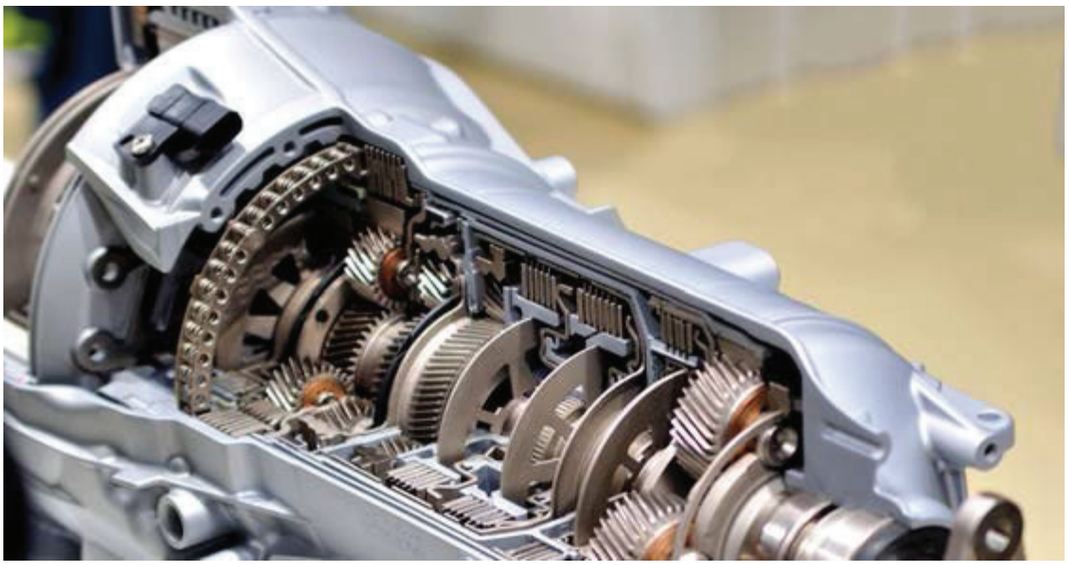

Figure 3.5.3 (b) The photographic view of a synchromesh gear box

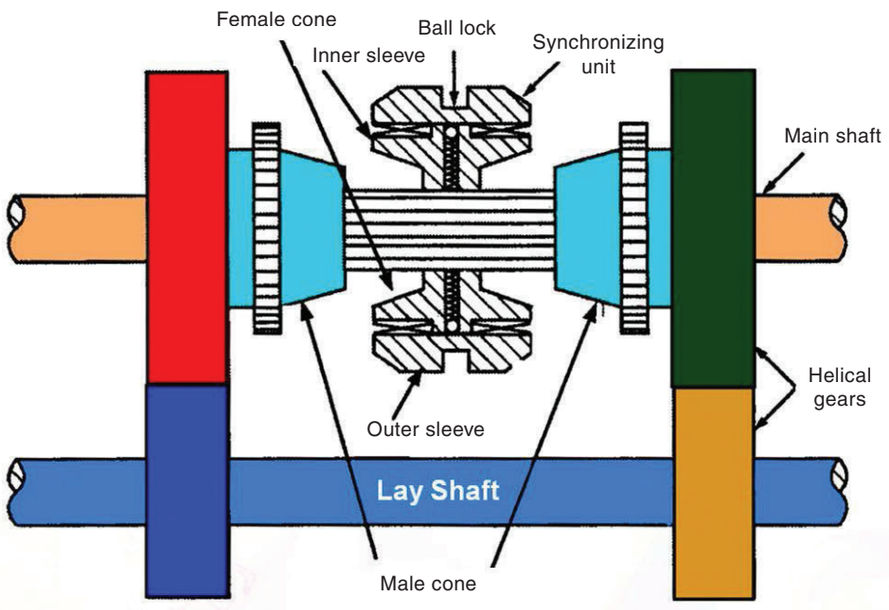

Figure 3.5.3 (c) Layout of a synchromesh gear box

The photographic view of a synchromesh gear box can be seen in Figure.

Working principle

The layout of the synchromesh gear box is shown in Figure. The operation of the synchromesh gear box for different vehicle speed is explained below.

Neutral position

During neutral condition both the synchronizers (S_2 and S_1) are not in mesh with any gears as shown in Figure.

BAE_ENG_Chapter_03.indd 41 01/11/2022 11:43:32 AM

All gears in the shafts 1,2& 3,4 & 5,6 & 7,8,9 rotate. However the main output shaft does not rotate as the dog clutches are not in engagement with any of the gears. Hence rotational power is not transmitted.

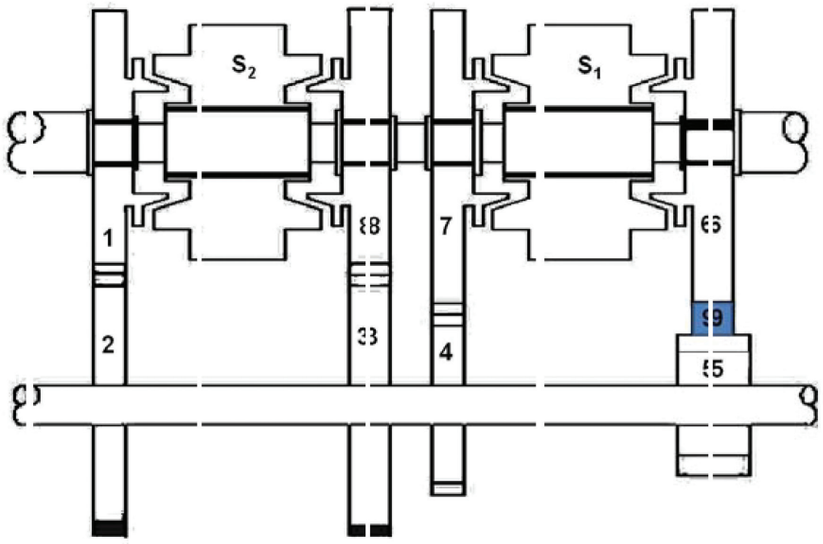

Figure 3.5.3.1 Neutral condition S1 and S2 are held stationary

First gear

By actuating the gear shift lever, the synchronizer S_1 is moved towards left side as shown in Figure 3.5.3.2 to engage gear 7 in the main shaft.

Now the rotational power is transmitted to the main shaft through the dog clutch. Now the speed is low. The power transmission from the clutch shaft to the output shaft is by gear 1-2 is

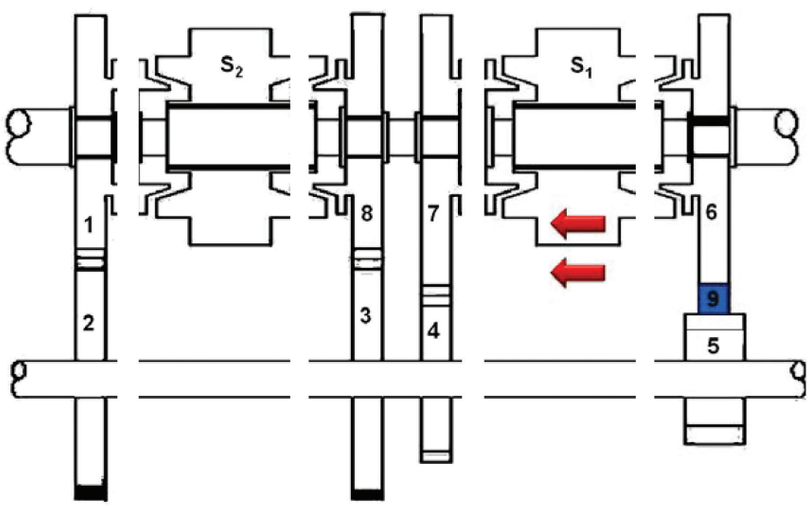

Figure 3.5.3.2 First gear condition

BAE_ENG_Chapter_03.indd 42 01/11/2022 11:43:32 AM

means rotational power is transmitted to main shaft by 1-2-4-7-S_1.

Second gear

For obtaining the second gear, by actuating the gear shift lever, the synchronizer S_2 is moved towards right to engage the gear 8 in the output main shaft. Now the rotational power is transmitted to the main shaft through the synchronizer S_2. Now the speed of the main shaft is higher than the speed of the first gear. The power transmission from the clutch shaft to the output shaft is through the gears 1-2-3-8-S_2.

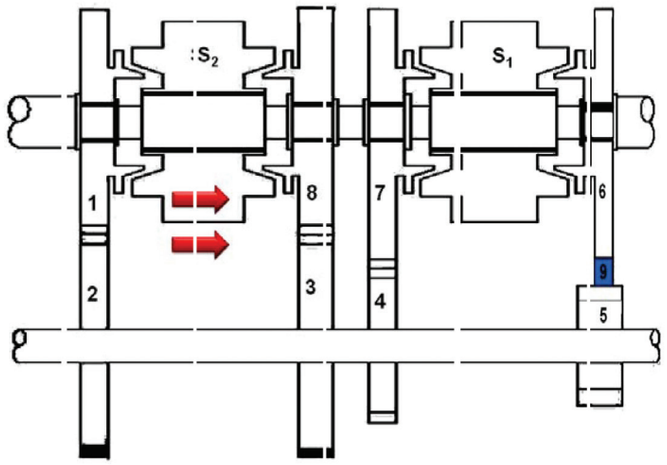

Figure 3.5.3.3 Second gear condition

Third gear

To achieve the third gear the synchronizer S_2 is moved left to engage with the clutch shaft gear directly. Now the output shaft rotates at the speed same as the clutch shaft speed. The rotational power is transmitted to the main shaft directly through the gear 1-S_2.

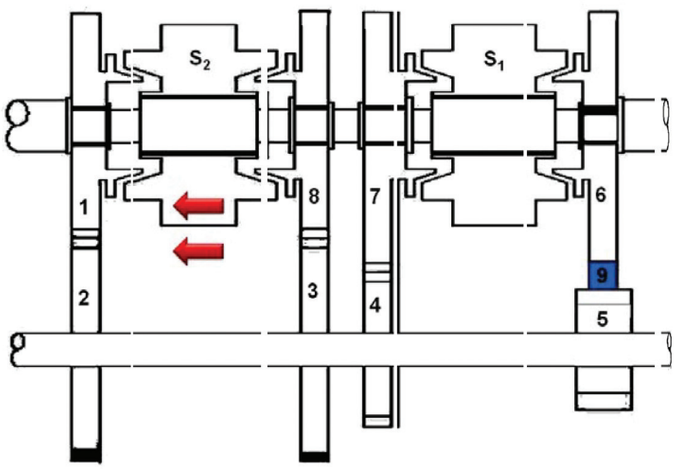

Figure 3.5.3.4 Third gear condition

BAE_ENG_Chapter_03.indd 43 01/11/2022 11:43:33 AM

Reverse Speed

To obtain the reverse gear, the synchronizer S_1 is actuated to move right towards the reverse gear 6 to engage as shown in Figure 3.5.3.5. As the idler gear is placed between the gears 5 in the lay shaft and 6 in the main shaft the idler gear changes the direction of rotation of the gear 6 in the main shaft. Now the vehicle moves in the reverse direction. The power transmitted from the clutch shaft to the main shaft is through gears 1-2-5-Idler-6-S_1.

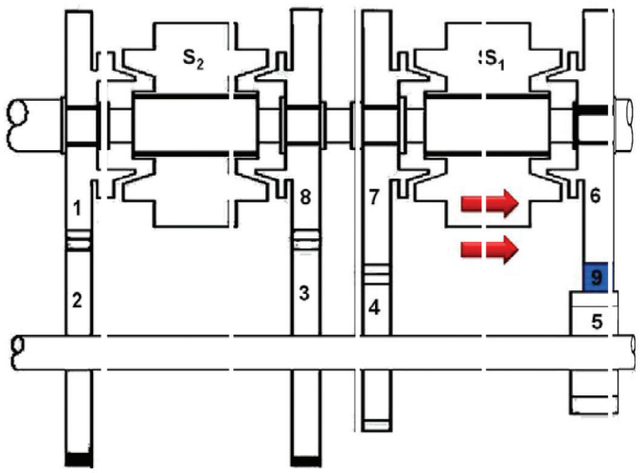

Figure 3.5.3.5 Reversed gear condition

3.5.4 Synchronizing unit

In synchronizing unit two cone shaped parts are present. One cone is a part of the collar and the second cone is a part of the gear. Both the cones rotate at different speeds. An exploded view of the synchronizer unit is shown in Figure.

When the cone 2 is rotated, cone 1 start to rotate and move towards the cone 2 and be in contact with the cone 2. Because of this action friction occurs in the contact area of the cones and hence it increases the speed of gear. Now the both cone speeds come to the same. Further moving the collar makes the outer drum to contact with the dog clutch in the gear. Now the rotational power is transmitted to the main shaft. By the same way it moves on left hand side and contacts with the another gear and transmits the power to the main shaft. The cone 2 is locked under different states by the ball and spring in the cone 1. It is connected to the gear changing fork in the slot which is located in the outer sliding sleeve.

Uses of synchromesh unit

1. For operating the gears smoothly by synchronizing two different speeds of the gears.
2. For changing gears easily
3. No need of double de clutching
4. For transmitting power efficiently
5. Gears will not wear rapidly
6. Less noise in operation

De merits of synchromesh unit

1. Low cost
2. Maintenance is difficult
3. Difficult repair

BAE_ENG_Chapter_03.indd 44 01/11/2022 11:43:33 AM

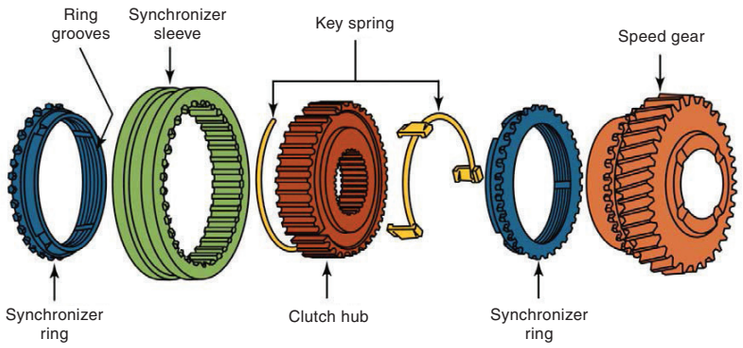

Figure 3.5.4 Exploded view of a synchronizer unit

3.6. Properties of gear box

1. Gear box should have long life.
2. Noise should be lower in the gear box.
3. Fitting the gears in the gear box should be simple.
4. Replacing the worn out and broken parts should be easy in the gear box.
5. It should transmit the torque and speed according to the requirement.

3.7 Gear Ratio

The ratio between the speed of the driver gear to the speed of the driven gear is called as the gear ratio or it is a ratio between number of gear teeth in the driver gear to the number of gear teeth in the driven gear.

$$r_G = \frac{N_2}{N_1} \text{ or } \frac{T_2}{T_1}$$

Gear ratio = clutch shaft speed / main shaft speed

$$\text{Gear ratio} = \frac{speed\ of\ the\ driven\ gear}{speed\ of\ the\ driven\ gear} \text{ or}$$

$$\frac{\text{No of teeth's in driven gear}}{\text{No of teeth's in driven gear}}$$

Where,

r_G = Gear Ratio

N_1 = speed of the Driver gear

N_2 = speed of the Driven gear

T_1 = No of teeth's in driver gear

T_2 = No of teeth's in driven gear

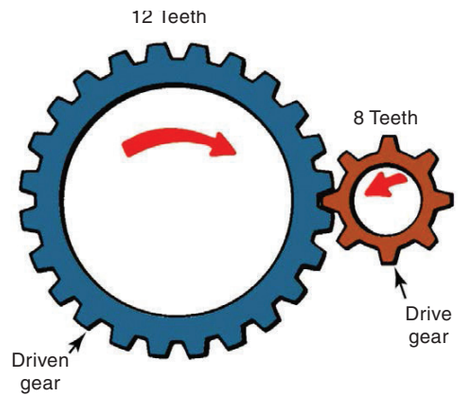

Figure 3.7 Gear ratio

3.8 Over drive

The method of increasing the speed of propeller shaft more than that of the engine speed is called as the over drive. A view of the overdrive can be seen in Figure 3.8 (a).

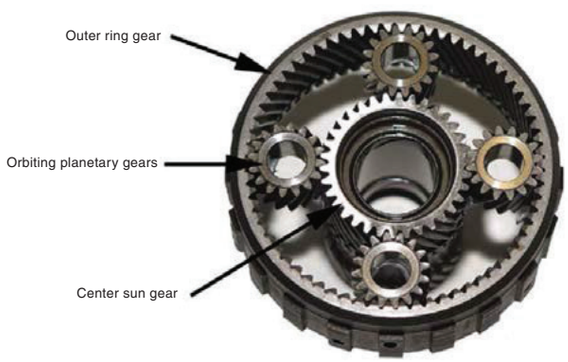

Figure 3.8 (a) A view of automobile overdrive

BAE_ENG_Chapter_03.indd 45 01/11/2022 11:43:34 AM

DO YOU KNOW?

One two-wheeler comes out of the production line every two seconds in India





The part which performs this action is called as the overdrive unit. If the main shaft in the gear box rotates at higher speed than the clutch shaft, then the transmission system is said to be with the over drive. Over drive unit is fixed next to the gear box. It is placed in between the gear box and the propeller shaft.

Construction

In over drive two shafts are present. They are input shaft and output shaft.

BAE_ENG_Chapter_03.indd 46 01/11/2022 11:43:34 AM

Input shaft is the main shaft of gear box. Output shaft is the propeller shaft. The parts of the overdrive can be seen in Figure 3.8 (b).



Figure 3.8 (b) Parts of overdrive

An epicyclic gear train is mounted on the input shaft. In this epicyclic gear train, a sun gear, three planet gears, a planet carrier and a ring gear are present. This can be seen in the above Figure.

Working Principle

The casing is stationary when the sun gear is locked with casing. Now the overdrive unit starts functioning and the speed of the output shaft is increased. When the sun gear is locked with the planet carrier, the usual input shaft speed is given to the output shaft.

Advantages of overdrive

1. Engine life is increased
2. Achieves reduction in fuel consumption.
3. Less vibration
4. Low noise
5. Excess gear ratio can be achieved
6. Wear of engine is lower.
7. Connecting over drive unit is easy.

Trouble shooting of gear box

1. Gear box noise

Causes	Remedies
1. Bearing may get damaged	Need to change bearing
2. Lubricating oil level may be low	Fill the required amount of lubricating oil
3. Teeth's may be broken in the gear	Need to change the gear
4. Misalignments between gearbox and engine	Need to correct it

2. Hard Gear Shift

Causes	Remedies
1. Improper clutch adjustments	Need to correct it
2. The spring in the gear changing arrangement may not working	Need to change with a new spring
3. There may be sticking or jamming in the main shaft	Should correct the shaft
4. There may be a sticking of fork in the gear shifting system	Need to clean and lubricate.

BAE_ENG_Chapter_03.indd 47 01/11/2022 11:43:34 AM

3. Gear slip

Causes	Remedies
1. Fork in the gear shifting mechanism may not be working	Have to correct it
2. Dog clutch in the gearbox or synchronizer may have worn out	Need to change with a new one
3. Spring in the gear shifting mechanism may have loosened	Have to change the spring
4. Gears in the main shaft may have worn out	Need to change the gear with a new one

4. Lubricating oil leakages in the gear box

Causes	Remedies
1. Fault in the oil seal in the gear box	Have to change with a new oil seal
2. Lubricating oil level may be higher than the required amount	Need to discharge the excess oil
3. Oil leakage seal may be broken	Need to change with a new one
4. There may be loosen in bolts on the Gear box cap	Need to tighten it

3.9 Parts of the gear box

3.9.1 Gear box housing

The Box like arrangement where the bearings (which support the shafts) are mounted, filler plug with air vent hole, oil drain plug are present is called as the gear box housing. This box is generally made of cast iron as shown in Figure 3.9.1.



Figure 3.9.1 Gear box housing

3.9.2 Gear box input or clutch shaft

It is connected with the clutch plate at one end supported by the flywheel and a gear fitted at the other end. The view of input shaft can be seen in Figure 3.9.2.



Figure 3.9.2. Gear box input shaft

BAE_ENG_Chapter_03.indd 48 01/11/2022 11:43:34 AM

3.9.3 Lay shaft

It is mounted at the bottom of the gear box casing. Different gears are mounted on the lay shaft depending on the speed of the gear box. The picture of lay shaft can be seen in Figure 3.9.3.



Figure 3.9.3 The picture of a lay shaft of an automobile gear box

3.9.4 Gear box output shaft or main shaft

It is located at the top of the gear box casing at straight line with the input shaft. Slots are present in this shaft. Through this shaft the power is transmitted to the propeller shaft.

3.9.5 Reverse gear shaft

The smallest shaft in the gear box is the reverse gear shaft which has only one gear called as the idler gear. It is fitted on the gear box casing. This shaft is used for transmitting the power from the lay shaft to the main shaft.

3.9.6 Speedometer drive

Skew gear is connected with the main shaft. With the skew gear a cable with a small gear is connected at one end and the other end of the cable is fitted at the dashboard of the driver. This drive is used for knowing the speed of the vehicle. The picture of a speedometer drive can be seen in Figure 3.9.6.

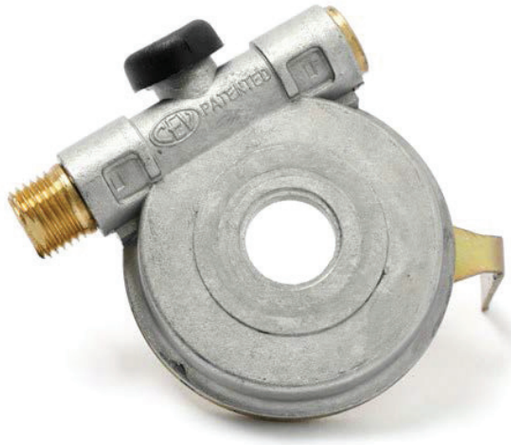

Figure 3.9.6 A picture of a speedometer drive

3.9.7 Gear selector mechanism

On the top of the gear box, an arrangement with a lever with a gear knob, selector rod and shifting fork are connected. This arrangement is called as the gear (shifting) selecting mechanism. Gear selector mechanism is used for selecting the required gear for the required speed of the vehicle. The picture of a gear selector mechanism can be seen in Figure 3.9.7.



Figure 3.9.7 Gear selector mechanism

BAE_ENG_Chapter_03.indd 49 01/11/2022 11:43:35 AM

Types of gear shift mechanisms

1. Floor gear shifting Mechanism
2. Steering Gear Shifting Mechanism

Floor gear shifting mechanism

If the gear shifting mechanism is located at the top of the gearbox, then it is called as the floor gear shifting mechanism

Steering gear shifting mechanism

If the gear shifting mechanism is located at the sideway of the steering column, then it is called as the steering gear shifting mechanism

3.10 Gear box lubrication

1. In the gear box, lubricating oil of SAE 90 has to be filled.
2. The lubricating oil must be filled until the lay shaft is (dipped) covered by the oil. The lubricating oil must be highly viscous.
3. When the gears are rotating, the lubricating oils is sprayed on all the parts of the gear box and lubricated.
4. After 1000 kilo meters of the vehicles run lubricating oil top up must be done.
5. After 10000 kilometers of the vehicle the lubricating oil must be completely replaced by the new lubricant.
6. To pour the oil filler cap is provide on the top of the gear box. An air vent is also provide to allow the atmospheric air to enter.
7. A drain plug is provided at the bottom of the gear box to drain the lubricating oil.

3.11 Transfer case

The arrangement used for transmitting the engine's power to all the four wheels is called as the transfer case.

The transfer case is fitted on the vehicles with four wheel drive. This arrangement is generally used in military vehicles and jeeps. A photographic view of an automobile transfer case can be seen in Figure 3.11.1.

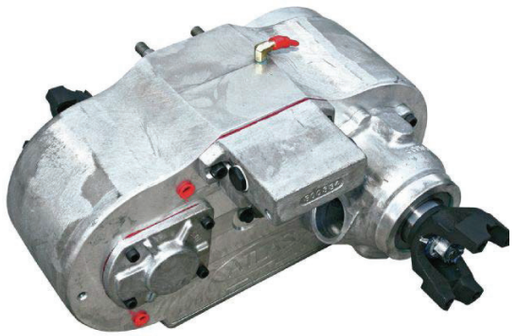

Figure 3.11.1 Photographic vie of an automobile transfer case

Construction

In the main shaft of the gear box two gears are present. Between the two gears a sliding gear is present. The gear in the main shaft is in mesh with the idler gear. With this front axle drive gear and rear axle drive gear are connected. A clutch is fitted with the front axle drive gear. The important parts of the transfer case can be seen in Figure 3.11.2.

Operation

With the help of the gear shift mechanism when the sliding gear in the main shaft is shifted to right or left, through the idler gear the power is transmitted to the front or rear wheels with low or high speeds. In addition to this, when there is no need for drive power to the front wheels, with the help of the clutch arrangement the drive power can be disengaged. If necessary the four wheel drive can be also obtained.

BAE_ENG_Chapter_03.indd 50 01/11/2022 11:43:35 AM

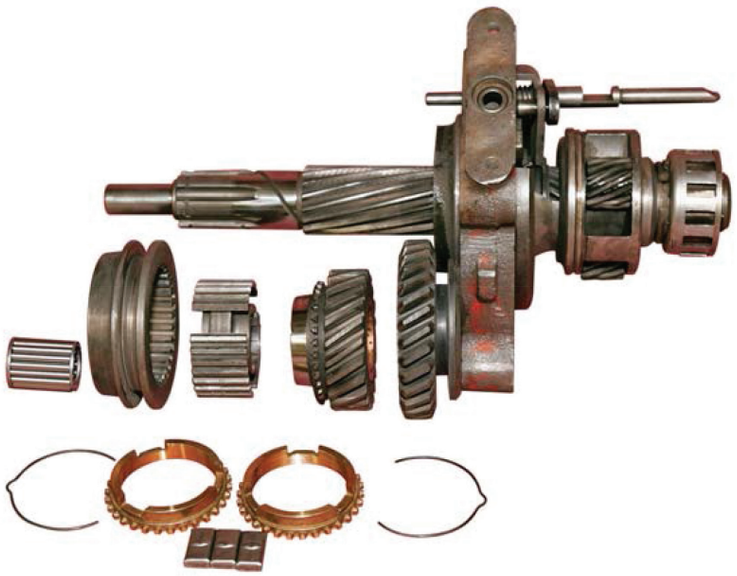

41CED

Figure 3.11.2 Important parts of a transfer case

Student Activity

1. To collect news papers, owners manual and service manual and submit the information regarding the gear box.
2. Ask the students to visit nearby workshop to collect and submit the trouble shooting procedure of the gear box used in two wheelers.
3. Ask the students to visit nearby heavy vehicle workshop to collect and submit the gear ratio, number of speed and type of gear box used in the heavy vehicles.

Glossary

1.	Gear	–	பற்சக்கரம்
2.	Gear box	–	பற்சக்கர பெட்டி
3.	Lever	–	சுண்டி
4.	Shaft	–	தண்டு
5.	Axis	–	அச்சு
6.	Idle Gear	–	பயனற்ற பற்சக்கரம்
7.	Main Shaft	–	முக்கிய தண்டு
8.	Link	–	இணைப்பு
9.	Cable	–	வடம்
10.	Gear Ratio	–	பற்சக்கர விகிதம்
11.	Counter Shaft	–	இடைச் சுழல் அச்சு
12.	Spur Gear	–	நேர் பற்சக்கரம்

BAE_ENG_Chapter_03.indd 51 01/11/2022 11:43:35 AM

References

1. S.K. Gupta, A Text Book of Automobile Engineering, S. Chand and Company, New Delhi, ISBN 978-93-837-4691-0, First Edition 2014, Reprint 2016.
2. Automobile Engineering, 2nd Edition, Sci Tech Publications (India) Pvt Ltd, 2011. Ramalingam. K.K.
3. Kirpal Singh, Automobile Engineering, Vol 1, Standard Publisher and distributor, ISBN – 13 – 978-8180141966
4. Jack Erjavec- Automotive Technology_ A Systems Approach -Delmar Cengage Learning (2009) ISBN-13: 978-1428311497
5. James D. Halderman, Automotive Technology, Principles, Diagnosis and service, fourth Edition, 2012, Prentice Hall, ISBN - 3: 978-0-13-254261-6
6. K.K.Jain and R.B.Asthana, Automobile Engineering, Tata McGraw-Hill Publishing Company Limited, New Delhi
7. R.K.Rajput, A Text Book of Automobile Engineering, Laxmi Publications, New Delhi.
8. A.K. Babu & Er. Ajit Pal Singh, Automobile Engineering, S.Chand Publishing, New Delhi.
9. Internal Combustion Engines by V. Ganesan, Tata McGraw-Hill Education, 2004
10. Automotive Mechanics by William Crouse, Donald Anglin

Webliography

1. https://www.brighthubengineering.com/fluid-mechanics-hydraulics/17345-lubricant-properties-for-a-gearbox-part-two/
2. https://www.anaheimautomation.com/manuals/forms/gearbox-guide.php
3. http://noengwks.org/3-most-common-gearbox-problems/
4. http://noengwks.org/5-types-of-industrial-gearboxes-their-strengths-and-applications/
5. http://knowhow.eriks.co.uk/top-10-tips-for-industrial-gearbox-inspection-and-maintenance
6. https://khkgears.net/new/gear_knowledge/gear_technical_reference/gear_materials.html
7. https://www.howacarworks.com/basics/how-manual-gearboxes-work
8. http://www.mech4study.com/2014/03/what-is-gear-box-what-are-main-components-of-gear-box.html
9. http://mechanicalmania.blogspot.com/2011/07/types-of-gear.html

BAE_ENG_Chapter_03.indd 52 01/11/2022 11:43:35 AM

Evaluation

VL53J

PART - A

One mark questions

Choose the correct answer

1. The basic principle involved in gear box operation is.
   a) Friction
   b) Faraday's Lay
   c) Pascal's Law
   d) Lever

2. The type of gear used in sliding mesh gear box is.
   a) Bevel Gear
   b) Spur Gear
   c) Worm Gear
   d) Helical Gear

3. Top Gear Ratio is.
   a) 2:1
   b) 1:2
   c) 1:1
   d) 1.5:1

4. The method of increasing the vehicle speed than the engine speed is called as.
   a) Power change method
   b) Overdrive
   c) Gear Ratio
   d) Synchronizing

5. The lubricating oil used in gear box is.
   a) SAE 50
   b) SAE 60
   c) SAE 90
   d) SAE 120

6. The second component of the transmission system is.
   a) Clutch
   b) Gear Box
   c) Propeller shaft
   d) Universal Joint

7. Reducing the rotational speed and increasing the torque is done by.
   a) Clutch
   b) Gear Box
   c) Propeller shaft
   d) Universal Joint

8. The gear oil must be replaced for every _____ kilometers.
   a) 1000
   b) 2000
   c) 5000
   d) 10000

9. The gear Box which transfers the power through the dog clutch is.
   a) A Sliding mesh Gear Box
   b) Constant Mesh Gear Box
   c) Synchromesh Gear Box
   d) Epicyclic Gear Box

10. The part in between the clutch and propeller shaft.
    a) Engine
    b) Gear box
    c) Differential
    d) Real axle

BAE_ENG_Chapter_03.indd 53 01/11/2022 11:43:35 AM

PART – B

Three mark questions

1. List out the types of gears used in gear boxes.
2. What is the need of gear box?
3. Where is the location of gear box?
4. Explain the advantages of sliding mesh gear box.
5. What are all the general types of gears?
6. What are all the types of gear boxes?
7. What is meant by gear ratio?
8. What is meant by over drive?
9. What is called gear box?
10. What are the disadvantages of sliding mesh gear box?

Part - C

Five mark questions

1. Describe about spur gear.
2. Explain the advantages and disadvantages of constant mesh gear box.
3. Describe about synchromesh Unit.
4. What are the advantages and disadvantages of synchromesh gear box?
5. Write about Bevel gear?

Part - D

Ten mark questions

1. Explain the sliding mesh gear box construction and working principle with neat diagram.
2. Explain the Constant mesh gear box construction and working principle with neat diagram.
3. Explain the synchromesh gear box construction and working principle with neat diagram.

BAE_ENG_Chapter_03.indd 54 01/11/2022 11:43:35 AM

UNIT
4

Propeller Shaft and Rear Axle



Contents

4.0 Introduction
- 4.0.1 Propeller shaft

4.1 Material for the Propeller Shaft
4.2 Functions of Propeller Shaft
4.3 Types of Propeller Shaft Drives
- 4.3.1 Hotchkiss Drive
- 4.3.2 Torque Tube Drive

4.4 Parts of Propeller Shaft
4.5 Universal Joint
4.6 Slip Joint
4.7 Functions of Universal Joint
4.8 Types of universal joint
- 4.8.1 Hooke's Type
- 4.8.2 Pot Type
- 4.8.3 Rubber Coupling Type
- 4.8.4 Ball Type

4.9 Differential Unit
4.10 Connecting Methods of Bevel Gears
- 4.10.1 Straight Bevel Gear
- 4.10.2 Spiral Bevel Gear
- 4.10.3 Hypoid Gear
- 4.10.4 Worm And Worm Wheel

4.11 Differential Housing
- 4.11.1 Banjo Type
- 4.11.2 Split Type

4.12 Rear Axle
4.13 Types Of Rear Axles
- 4.13.1 Semi Floating Axle
- 4.13.2 Full Floating Axle
- 4.13.3 Three Quarter Floating Axle

4.14 Propeller shaft trouble shooting
4.15 Maintenance of the Propeller Shaft

B43ZK

Learning objectives

1. To learn how the energy is transmitted to the rear wheel.
2. To learn how the engine energy is changed according to the rear wheel rotation.

BAE_ENG_Chapter_04.indd 55 01/11/2022 11:45:36 AM

4.0 Introduction

Propeller shaft is the most important part of transmission system of a vehicle. It is located in between the gear box and the differential unit. One end of the propeller shaft is connected to the gear box and the other end is connected with the differential unit, and transmits the engine power to the rear wheels. The two ends of propeller shaft are connected by the universal joints and hence the engine's power is transmitted to the rear wheels without any losses even with the difference in distances. For operating the propeller shaft based on various load conditions of vehicle, sliding joint is fitted in between the universal joint and propeller shaft. The propeller shaft withstands the full accelerating power comes from the gear box.

4.0.1 Propeller shaft

It is made of hardened steel and in tubular form. Two propeller shafts are used if the vehicle length is more. Bearing is fitted between the centre of two propeller shafts.

4.1 Material for the propeller shaft

Propeller shaft is generally made up of alloy steel. Moreover it is made up of spring steel material.

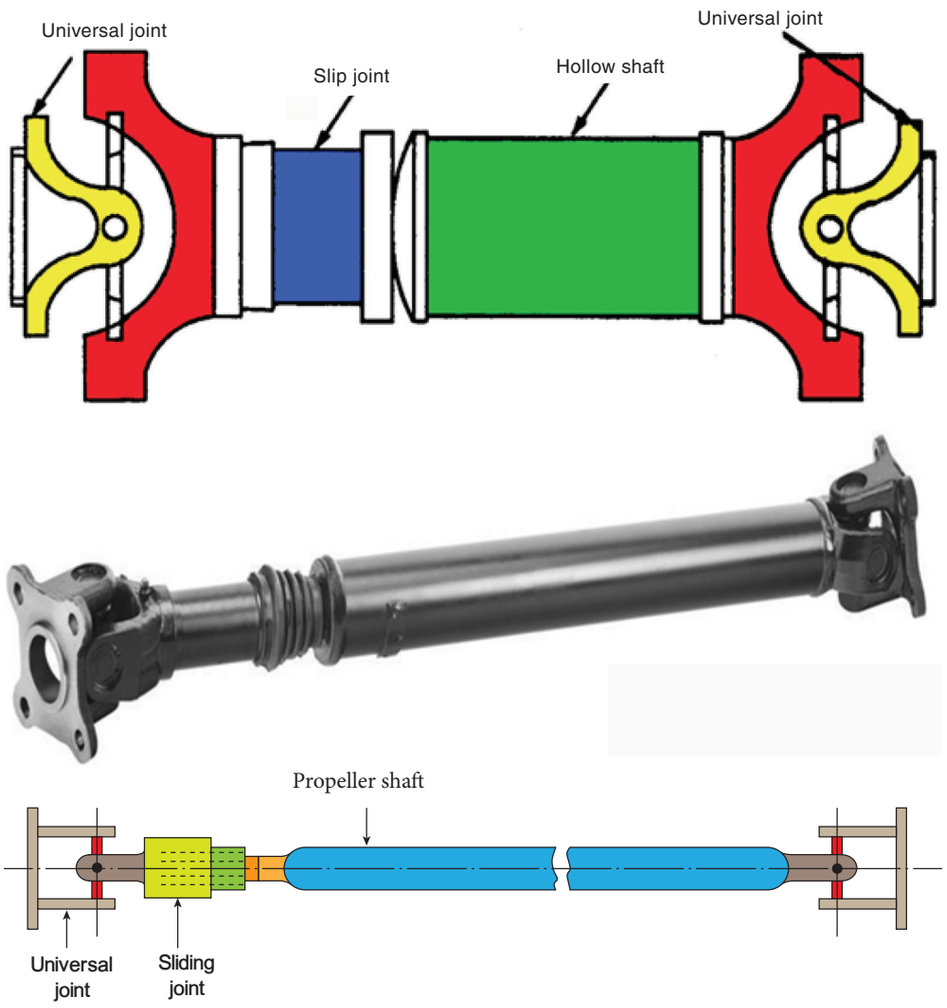

Figure 4.0.1 Propeller shaft

BAE_ENG_Chapter_04.indd 56 01/11/2022 11:45:37 AM

4.2 Functions of propeller shaft

- It transmits the engine's power from gear box to the differential unit smoothly.
- It transmits the rotational power from the gear box at different angles as per requirement.
- According to the load of the vehicle, the length of the propeller shaft varies and transmits the power through slip joints.
- When the vehicle is running, it completely withstands the vibration occurring in the transmission system.

4.3 Types of propeller shaft drive

The operation of propeller shaft is classified in to two types. They are

1. Hotchkiss Drive
2. Torque tube Drive

4.3.1 Hotchkiss drive

Construction

In this drive, the leaf springs are tightly fixed at the center of the axis of rear axle. The back end of the spring is attached with Shackle (movable). The front end is attached to the chassis frame with anchor pin (fixed). The two universal joints and a sliding joint were connected to the Propeller Shaft. The first universal joint is connected to the gear box shaft and second universal joint is attached with the bevel pinion shaft of the differential unit. The construction of the Hotchkiss Drive is shown in Figure 4.3.1.

Working Principle

When the vehicle goes forward with more loads, the front end of the propeller shaft elongates and the rear end of the leaf spring is pressed and the front part of the spring is elongated. This happens due to the front and backward movements of the universal joint and sliding joint located at the front end of the propeller shaft. Due to this the vehicle moves easily on the road.

This Hotchkiss drive is used in most of the vehicles. This type of drive makes the vehicle to move smoothly even on the roads with ups and down.

Advantages

1. Weight is less
2. Simple in construction
3. It does not make more noise.

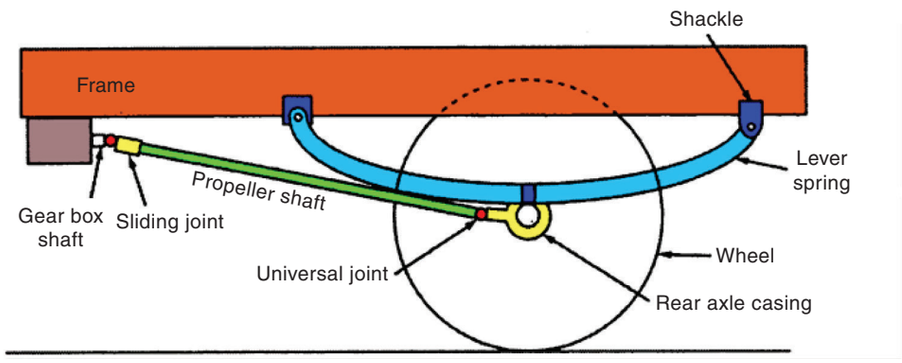

Figure 4.3.1 Hotchkiss drive

BAE_ENG_Chapter_04.indd 57 01/11/2022 11:45:37 AM

Disadvantages

1. Not protected well as the arrangement is in open outdoors.
2. Universal joints get damaged easily.

4.3.2 Torque tube drive

Construction

The propeller shaft of the vehicle is kept inside on another tube called as the torque tube which looks like a pipe. The construction of the Torque tube drive is shown in Figure 4.3.2.

The bearing which is connected to this allows the propeller shaft to rotate easily. Only one universal joint is fitted in this drive. The front part of the torque tube is like a cone and is connected at the back side of the gear box casing by using a ball and socket joint.

Working Principle

When the vehicle moves on the road, the torque and the drive thrust are transmitted to the chassis frame through axle casing. Since the ball and socket joint in the torque tube is supported by the roller bearing, the propeller shafts rotates easily. This torque tube drive is mostly used in cars and in heavy commercial vehicles.

Advantages

1. It's very safe to use.
2. It works for a long time.
3. Universal joint in this drive will not damage quickly

Disadvantages

1. Overweight.
2. It is not very strong.
3. It is not suitable for transmitting more power.

4.4 Parts of the propeller shaft

1. Universal joint
2. Sliding joint

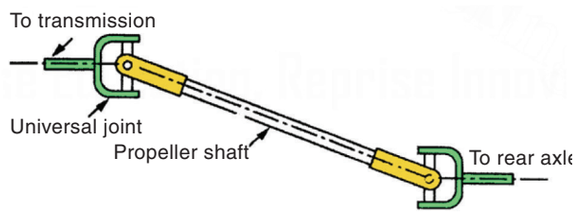

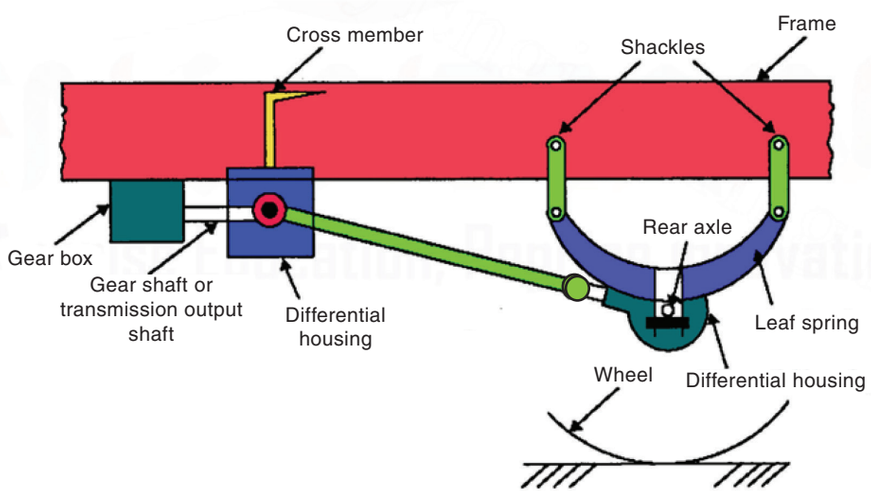

71QZE

Figure 4.3.2 Torque tube drive

BAE_ENG_Chapter_04.indd 58 01/11/2022 11:45:37 AM

4.5 Universal joint

This is connected at both ends of the propeller shaft. Since the propeller shaft is connected by the universal joint, it transmits the engine's power at different angles.

4.6 Slip joint

It is connected with the propeller shaft after the universal joint. It moves smoothly according to the movement of rear axle. Figure 4.6 shows the view of a slip joint used in automobiles.

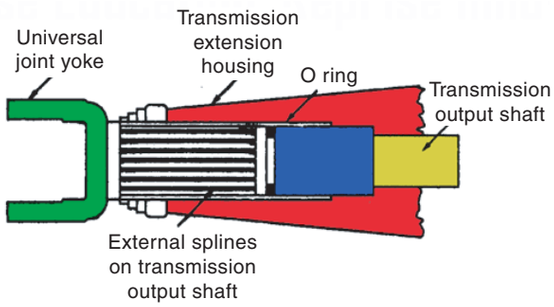

Figure 4.6 Slip joint used in automobile

4.7 Functions of universal joint

- It transmits the power from the gear box shaft to the propeller shaft through inclined direction.
- It helps to transmit the power without any loss when the vehicle is going on ups and downs of the roads.
- It withstands the vibrations occurring on the roads.
- It helps in varying the length of the propeller shaft.

4.8 Types of universal joint

1. Hooke's type
2. Pot type
3. Rubber coupling type
4. Ball type

4.8.1 Hooke's type

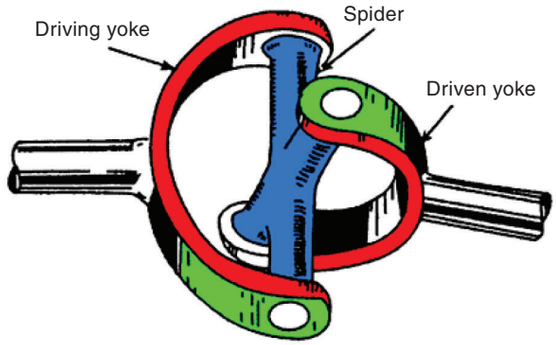

Figure 4.8.1 Hooke type universal joint

In this type of joint the spider is fixed in between the two yokes. In the spider, needle like bearings are present. These bearings are set at the bottom of the yoke on the slots made on the yoke for placing the bearings. Hence the bearings cannot come out of the yoke. One yoke is connected with the gear box and another one is connected with the propeller shaft. The spider rotates along with the driving yoke which is connected to the gear box. Thereby the drive yoke which is connected to the other side of the spider starts to rotate and transmits the power from gear box to propeller shaft smoothly. Figure 4.7 shows the hooke's join.

Advantages

1. It has high mechanical advantage.
2. It is simple in construction.
3. It transmits the power more effectively.
4. It works according to the weight of the vehicle.
5. It has long life.

BAE_ENG_Chapter_04.indd 59 01/11/2022 11:45:38 AM

6. It is mostly used in present day vehicles.
7. According to the up and down motion (18°) of propeller shaft the power is transmitted without any loss and vibrations.

4.8.2 Pot type universal joint

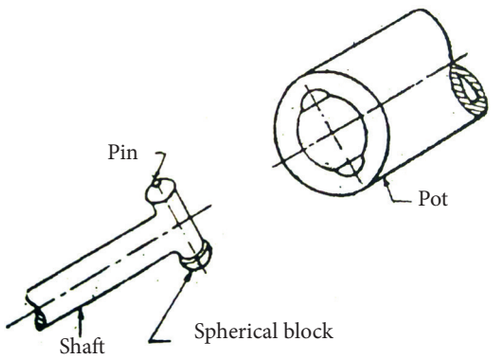

Figure 4.8.2 Pot type universal joint

One end of the shaft has T shape structure. Both the ends are joined with semi spheres using a pin. Cylinder like structure in the opposite is called pot type. Semi spheres in the T shaft are designed like moving part in the cylinder. So T shaft in the cylinder moves front and back and also in angles.

4.8.3 Rubber coupling type universal joint

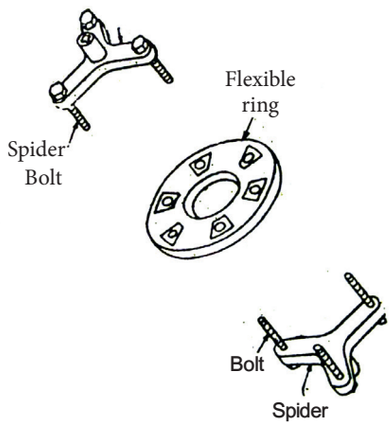

Figure 4.8.3 Rubber coupling type universal joint

In a round shaped rubber coupling there are six holes at an equal distance. This rubber coupling is placed between two spiders and fixed with bolt and nut. This rubber coupling is a flexible one to be with shaft. This can scope with only a small angle shake. It is also called as flexible ring type universal joint.

4.8.4 Ball type universal joint (Constant velocity type universal joint)

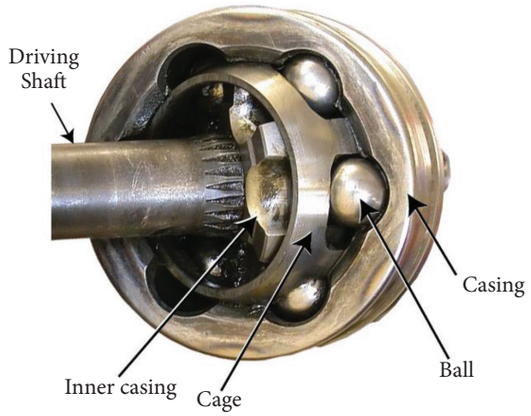

It is used to transmit the power approximately at 30° without vibration. Mostly used in front axle drive vehicles. It has input half shaft. One end of the shaft has splines in which inner spherical socket is fitted. Outer spherical socket is connected with the outer shaft. Grooves are cut between two sockets in which balls will move. When the input shaft rotates balls between the sockets will move and transmit the power smoothly.

4.9 Differential unit

When the vehicle moves straight on the road, the rear wheels run in the same way as the front wheels. The propeller shaft is connected to follow this. However, when the vehicle is negotiating a turn,

BAE_ENG_Chapter_04.indd 60 01/11/2022 11:45:39 AM

the outer wheels cover larger radius than the inner wheels. The outer wheels rotate more than the inner wheels. Hence the inner wheels have intermittent wear, less grip on the road and withstanding steering issues than outer wheels. The function of the differential unit is to provide different speeds for the inner and outer wheels whenever the vehicle is negotiating a turn.

Construction

Inside the differential casing sun gears are connected with the rear wheel axle. At the left side of the rear axle differential cage is fixed. For connecting two sun gears planets gears are used. At the end of the rear axle road wheels are connected. The construction of differential unit can be seen in Figure 4.9 and the pictorial view of a differential unit can be seen in Figure 4.9 (a).

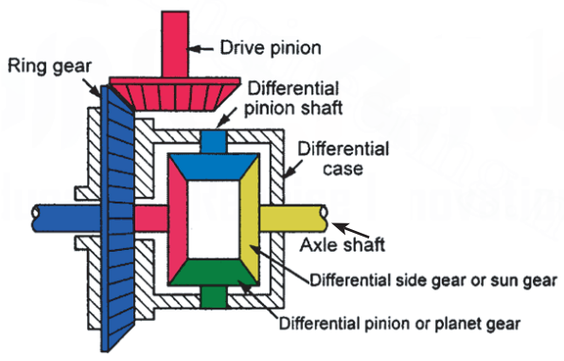

Figure 4.9 Construction of a differential unit

Working principle

When the differential cage rotates, the planet gears inside the differential casing also rotate along with it. Hence due to the rotation of planet gear, the sun gear which is connected to it also rotates and rotates the right side rear axle. Now due to the rotation of the differential cage, sun gears, planet gears, rear axle and rear wheels all rotate at the same speed. When the vehicle takes a turn on the road, the planet gear rotates and tends to rotate the outer wheel at high speed and hence the vehicle turns easily on the road.

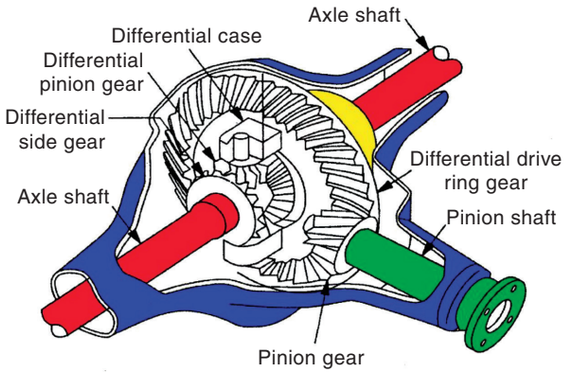

Figure 4.9 (a) Pictorial view of a Differential Unit

When the vehicle goes straight

The power passing from the engine through the clutch, gear box and propeller shaft rotates the pinion shaft of the differential unit. At that time the crown wheel which is connected to the pinion shaft also rotate along with the cage unit. In this condition the planet and sun gears in the differential unit rotate in the opposite direction which creates the brake and the entire unit rotates with full force. Hence the rear axle shaft which is connected to the sun gear rotates at high speed and transmits the power to rear wheels. In this condition the power is transferred at 90° angle and directs the vehicle in a straight direction.

When the vehicle is negotiating a turn

When the vehicle is in a position to take a turn on either right side or

BAE_ENG_Chapter_04.indd 61 01/11/2022 11:45:39 AM

left side, the driver rotates the steering wheel according to the turning direction, at that time the load is acting on the axle shaft of the wheel which is going to turn. Hence the sun gear which is connected to it is also subjected to the load and reduces the rotation. At the same time the planet gears which are connected on the top and bottom of it rotate at high speed and rotate the sun gear which is located on other side. Hence the outside wheel rotates at higher speed than the inner wheel and turns the vehicle for certain distance easily. In this case the speed lost by the inner wheel is gained by the outer wheel and hence the vehicle turns easily on either left or right side.

4.10 Connecting methods of bevel gears

Based on the arrangement of the teeth in the pinion gear, the connecting methods with crown wheel are classified in to four different types.

1. Straight bevel gears
2. Spiral bevel gears
3. Hypoid gears
4. Worm and worm wheel

4.10.1 Straight bevel gears

In this type the gear teeth are cut in straight and connected at the center of the pinion. To operate this more amount of energy is required. In addition, when it is in operation, it produces more noise and it wears quickly. Figure 4.10.1 shows the view of straight bevel gear.



Figure 4.10.1

4.10.2 Spiral bevel gears

In this type of gears the teeth are cut in the inclined position. Hence the teeth are very well in mesh with the other teeth and the energy is transferred very softly and uniformly. In this type the axis of the crown wheel and the pinion are arranged in the same axis. This gear works without any noise and lasts for a long time. Figure 4.10.2 shows the view of spiral bevel gear arrangement.



Figure 4.10.2 Spiral bevel gear

Advantages

1. It has a strong arrangement.
2. It is more efficient.
3. Silent and smooth in operation.

BAE_ENG_Chapter_04.indd 62 01/11/2022 11:45:39 AM

Disadvantages

1. Arranging the parts is very difficult.
2. It is more expensive.

4.10.3 Hypoid gears

In this type of gears the teeth are cut in spiral shape. In this arrangement the pinion gear is placed just below the center of the crown gear and hence the height of the chassis is reduced. Figure 4.10.3 shows the view of a hypoid gear arrangement.



Figure 4.10.3 Hypoid bevel gear

This type is mostly used in heavy vehicles. During its operation more heat is generated in it. Hence for reducing the heat generated, more amount of lubricating oil is required. It functions smoothly and works for long time.

Advantages

1. Safe to operate and it is less noisy in operation.
2. The height of chassis is less.
3. It can withstand maximum amount of rotational torque.

Disadvantages

1. It has low ground clearance.
2. Assembling and dismantling the parts is difficult. Repairing the parts is difficult.
3. It requires lubricating oil which must withstand high pressure.

Application

1. It is used mostly in the vehicles which are used for aged persons and patients.
2. It is used mostly in foreign cars.

4.10.4 Worm and worm wheel

In this type of gear in worm and worm wheel are used instead of pinion and crown wheel as shown in Figure 4.10.4. The worm in this arrangement is located as per the design either above or below the Worm Wheel. It is used mainly in heavy vehicles. It gives a smooth, superior and stable motion of operation. Worm is made of nickel and stabilized steel. Worm wheel is made up off phosphorous bronze material.



Figure 4.10.4 Worm and worm wheel arrangement

Advantages

1. Reduces the speed very quickly.
2. Transmission power is high.
3. Noiseless in operation.
4. By placing the worm at the upper side the ground clearance is increased.

BAE_ENG_Chapter_04.indd 63 01/11/2022 11:45:39 AM

Disadvantages

1. Assembling and repairing of parts is difficult.
2. It needs special lubricating oil.
3. It has very less ground clearance.
4. High cost and heavy weight.
5. It is suitable only for heavy vehicles.

4.11 Differential housing

Rear axle casing or housing is the one which has the differential unit and the half shaft within it. It helps in preventing formation of dust particles inside the axles. At the same time it provides the way for supplying the lubricating oil. The differential housing is generally classified in to two different types. They are,

1. Banjo type
2. Split type

4.11.1 Banjo type

As the complete structure of this casing looks like a banjo musical instrument, it is named as banjo type. Vacuum pipes are connected at both ends of it. At the middle the differential unit is placed. This type is generally used in all types of vehicles i.e. light and heavy vehicles. Figure 4.11.1 shows the view of the Banjo type differential housing

Advantages

1. Less weight
2. It withstands more weight.
3. Any repairs in this system can be done without dismantling in rear axle.

4.11.2 Split type

In this type, two vacuum tubes are connected with both sides of the differential casing by using bolts. In this type, if any fault occurs, the parts can be removed separately and repaired. Hence this type of housing is used in very few vehicles only. Figure 4.11.2 shows the split type differential housing

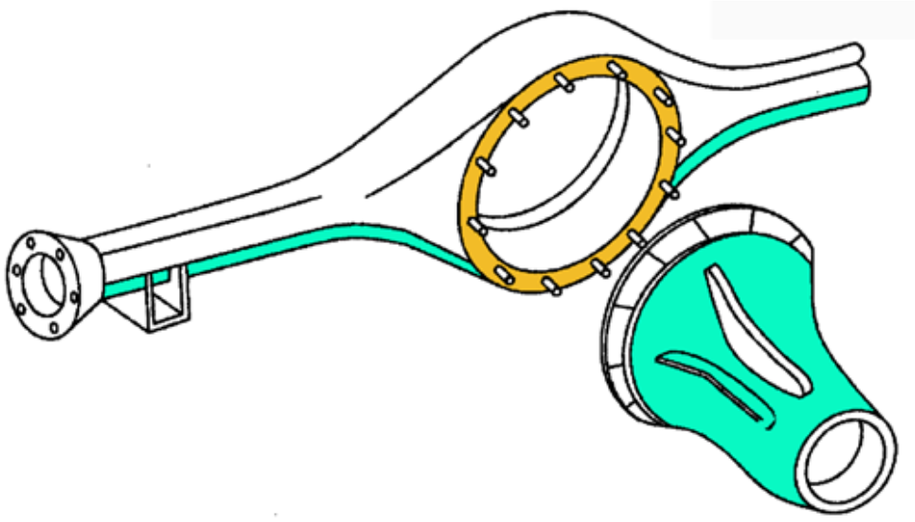

Figure 4.11.1 Banjo type differential housing

BAE_ENG_Chapter_04.indd 64 01/11/2022 11:45:39 AM

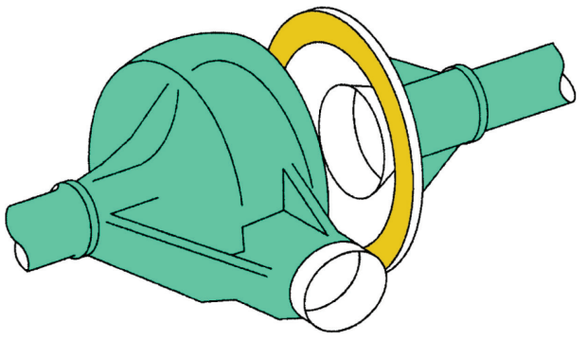

Figure 4.11.2 Split type differential housing

DO YOU KNOW?

In 1892, Rudolf Diesel a German engineer invented a "New Rational Combustion Engine" which lead him to building the first Diesel Engine in 1897.



4.12 Rear axle

The engine's power comes from the differential is transmitted through the rigid shaft called as the rear axle. It is made as two parts such as left side and right side in the vehicle and used. The axle's inner edge is connected with the sun gear by the splines and outer edge is connected to the wheel hub. This axle withstands the weight, vibrations and torque of the vehicles.

Purpose

1. To withstand rear side weight of the vehicle.
2. To transmit the engine power to rear wheels.
3. To act as axle needle for the wheels.
4. It acts as housing for the final drive, differential and half shafts.

Forces acting on the rear axle

The following forces act on the rear axle

1. Torque reaction
2. Driving torque or driving thrust
3. Side thrust
4. Weight of the body

1. Torque reaction

When the torque is transmitted from the propeller shaft through the differential, the bevel pinion is started to rotate over the crown wheel, at the time an opposite force is developed against the direction of differential housing. This force is equal to driving torque and operates in the opposite direction. This force produces a bending moment on the propeller shaft.

2. Driving torque

It is the torque transferred from the engine to the axle casing. The force created due to this on the rear axle is transferred to the body through chassis frame. Radius rods in the chassis are used to transmit this drive torque to the body.

BAE_ENG_Chapter_04.indd 65 01/11/2022 11:45:40 AM

3. Side thrust

This refers to the thrust developed between the axles in the longitudinal direction. This thrust is caused by the force of air acting on sideways. By connecting panhard rods on the chassis frame the side thrust could be minimized.

4. Weight of the body

The total weight of the goods and passengers of the vehicle acting on the axle are called as unsprung mass. They act on the axle through the springs. The total weight of the vehicle develops a shear force and bending moment on the axle. For reducing these forces powerful springs must be used.

4.13 Types of rear axle

The rear axle can be classified in to three different types according to the construction of rear axle shaft and wheel hub connections, They are

1. Semi-floating axle
2. Full-floating axle
3. Three quarter floating axle

4.13.1 Semi- floating axle

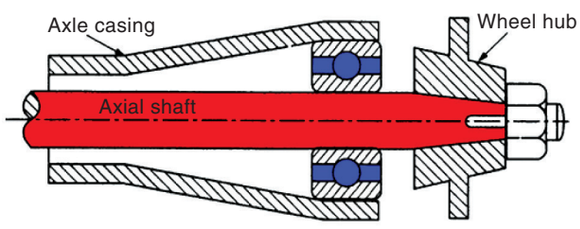

Figure 4.13.1 Semi-floating axle

In this type of axle a bearing is placed in-between the axle shaft and the axle casing. The outer axle shaft is coupled with the wheel hub by using locknut and the key. The axle shaft withstands the vehicle weight, driving thrust and transmits the power to the wheels. It is simple and cheaper compared to other types. This type is used in vehicles such as fiat 100 and standard-20. Figure 4.13.1 shows the view of a semi floating rear axle.

4.13.2 Full floating axle

In this type, one bearing is placed at the differential housing and the two tapper roller bearings are placed between the axle housing and wheel hub. Moreover the axle shaft is kept inside the axle housing and at its other end wheel hub is fitted by using a flange. The axle casing bears the whole weight of the vehicle and axle shaft transmits only the driving torque to the wheels. This type of axle is used in Ashok Leyland tarus, Tata 1612, 1312, Eicher 10.80, 10.90 Mondraj vehicles. Figure 4.13.2 shows the full floating rear axle.

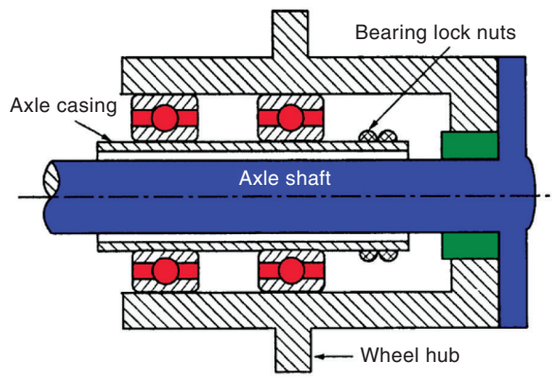

Figure 4.13.2 Full floating axle

Advantages

1. As the axle shaft transmits the power only to wheels the power output is higher.
2. Without removing the wheel and hub the axle can be removed.
3. If the axle shaft is broken, the power transmission only will be stopped.

BAE_ENG_Chapter_04.indd 66 01/11/2022 11:45:40 AM

4.13.3 Three quarter floating axle

In this type, one bearing is at the differential side and another bearing is placed in between the axle housing and wheel hub. The axle shaft is connected tightly with lock nut and key with the wheel hub. The axle shaft receives both driving torque and end thrust completely and bears one fourth of the vehicle's weight. The remaining weight of the vehicle is carried out by the axle housing. It is mostly used in the ambassador and Jeep like vehicles.

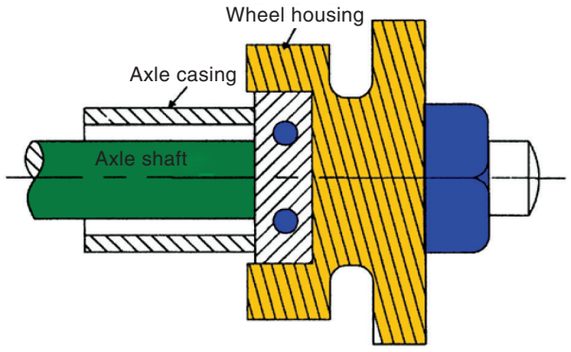

Figure 4.13.3 Three quarter floating axle

DO YOU KNOW?

In 1769 Nicolas-Joseph Cugnot of France arguably invented the first full-scale, self-propelled mechanical vehicle or automobile. It was a steam-powered tricycle.

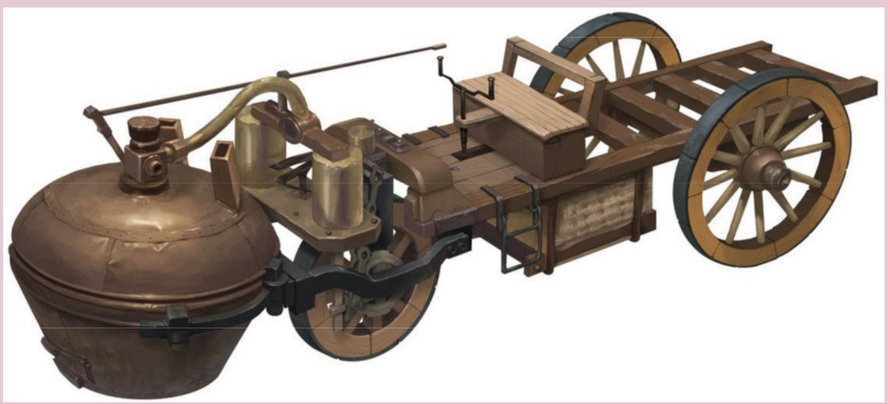

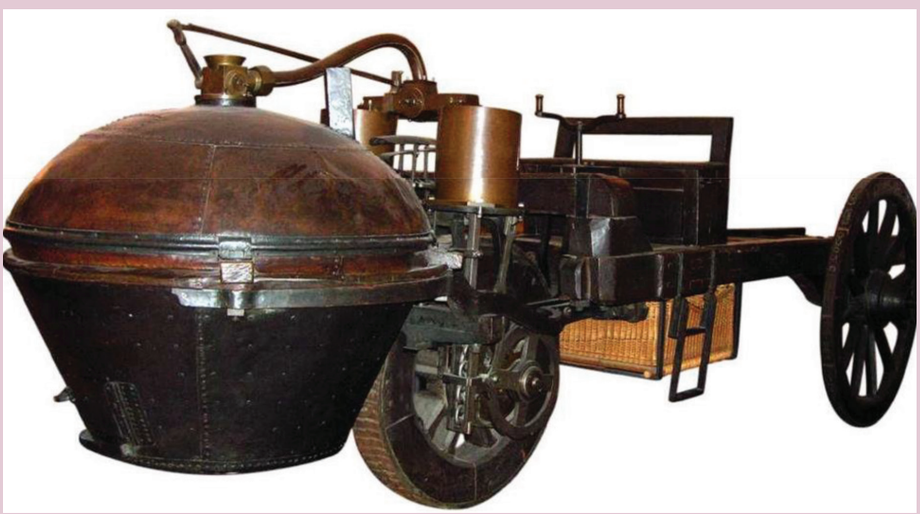

BAE_ENG_Chapter_04.indd 67 01/11/2022 11:45:40 AM

4.14 Propeller shaft-Trouble shooting

Improper rotation of the propeller shaft

S.No	Causes	Remedies
1.	There will be bend or twist on the shaft.	Need to rectify the run out by using the dial tester.
2.	The Propeller shaft may be unbalanced.	Need to inspect the shaft to bring it to its correct position.
3.	Wear occurred in splines, bearings and slip joints.	Inspect and replace the worn out parts.

More noise from propeller shaft assembly

S.No	Causes	Remedies
1.	The shaft might be bent or twisted	Inspect the shaft and fix it.
2.	Absence of lubricating oil in the propeller shaft unit .	Lubricate the shaft unit using the lubricating oil.
3.	Deposition of dust particles inside the bearings.	Need to clean it.
4.	Worn out of the splines.	Inspect and replace with a new one.

Over noise coming from differential unit

S.No	Causes	Remedies
1.	Insufficient amount of lubricating oil in the differential casing.	Need to pour required amount of lubricating oil in casing.
2.	Because of the usage of low grade lubricating oil.	Need to use good quality lubricating oil.
3.	There may be broken teeth in the pinion and bevel gears in the differential unit.	Find and replace with a new one.
4.	Insufficient gap between the gear mating points.	Need to correct with sufficient gap between the gear mating points
5.	Bearings might be broken in the differential unit.	Replace with new bearings.
6.	Cage unit might be slightly loosened with the crown wheel.	Connect them tightly.
7.	Washers might be broken or worn out in the differential unit.	Need to change with new washers.
8.	The spider or gears may have worn out or broken in the differential unit.	Need to change with a new one.
9.	The gears teeth may not be connected properly in the differential unit.	With the help of marking point make the connection between gear teeth and fix it.

BAE_ENG_Chapter_04.indd 68 01/11/2022 11:45:40 AM

Comparisons between Hotchkiss drive and Torque tube drive

S.No	Hotchkiss	Torque tube drive
1	Two universal joints are used.	Only one universal joint is used.
2	Slip joint is required.	No slip joint is present.
3	Propeller shaft is mounted in open space.	Propeller shaft is closed and placed in the torque tube.
4	Propeller shaft will bend and change its length.	No such changes occur.
5	The power and brake force are on both sides.	The force will be acting on only one side.

4.15 Maintenance of the Propeller shaft

- Lubrication must be provided periodically at the slip joints in the propeller shaft by using the grease
- Lubrication must be provided for the universal joins by using grease
- After cleaning the bearings they must be lubricated with grease.
- Bearing cup, spider, circlip and seal must be tested and lubricated

Student Activity

1. Visit any automobile depot nearby you and study the repair work of the heavy vehicles, working of propeller shaft and its types and submit a detailed report of your visit.
2. Visit nearby depot and study the construction of the heavy vehicle differential unit and its working and submit the report
3. Study the faults occurring in the differential unit by visiting a nearby depot and submit your inspection report.

BAE_ENG_Chapter_04.indd 69 01/11/2022 11:45:40 AM

Glossary

1.	Propeller Shaft	–	சுழல் தண்டு
2.	Rear Axle	–	பின் இருசு
3.	Bearing	–	உருளைத் தாங்கி
4.	Universal Joint	–	பலகோண (அச்சு) இணைப்பு
5.	Differential Unit	–	மாறபட்ட வேக வழங்கி
6.	Synchromesh	–	ஒத்து இயங்கு
7.	Driving Gear	–	இயக்கும் பற்சக்கரம்
8.	Driven Gear	–	இயக்கப்படும் பற்சக்கரம்
9.	Half Shaft	–	அரைத் தண்டு
10.	Sliding Mesh	–	நகர்ந்து இணைதல்

References

1. S.K. Gupta, A Text Book of Automobile Engineering, S. Chand and Company, New Delhi, ISBN 978-93-837-4691-0, First Edition 2014, Reprint 2016.
2. Automobile Engineering, 2nd Edition, Sci Tech Publications (India) Pvt Ltd, 2011. Ramalingam. K.K.
3. Kirpal Singh, Automobile Engineering, Vol 1, Standard Publisher and distributor, ISBN – 13 – 978-8180141966
4. Jack Erjavec- Automotive Technology_ A Systems Approach -Delmar Cengage Learning (2009) ISBN-13: 978-1428311497
5. James D. Halderman, Automotive Technology, Principles, Diagnosis and service, fourth Edition, 2012, Prentice Hall, ISBN - 3: 978-0-13-254261-6
6. K.K.Jain and R.B.Asthana, Automobile Engineering, Tata McGraw-Hill Publishing Company Limited, New Delhi
7. R.K.Rajput, A Text Book of Automobile Engineering, Laxmi Publications, New Delhi.
8. A.K. Babu & Er. Ajit Pal Singh, Automobile Engineering, S.Chand Publishing, New Delhi
9. Internal Combustion Engines by V. Ganesan, Tata McGraw-Hill Education, 2004
10. Automotive Mechanics by William Crouse, Donald Anglin

BAE_ENG_Chapter_04.indd 70 01/11/2022 11:45:40 AM

Webliography

1. http://www.mech4study.com/2014/04/what-is-differential-gear-used-in-automobile.html
2. http://www.pacificmarine.net/engineering/propeller-and-propeller-shaft/propeller-shaft.htm
3. https://www.instructables.com/id/Basic-Gear-Mechanisms/
4. https://www.showa1.com/en/product/automobile/propeller_shaft.html
5. http://www.klein-gelenkwellen.de/index.php?option=com_content&view=article&id=63&Itemid=85&lang=en
6. http://www.mech4study.com/2014/04/what-is-rear-axle-what-are-main-types-of-rear-axle.html
7. http://constructionloader.tpub.com/TM-5-3805-255-14/TM-5-3805-255-1400221.html
8. https://www.matfoundrygroup.com/News%20and%20Blog/Types_of_Differential_and_How_They_Work

Evaluation

OHEMT

PART - A

One mark questions

Choose the correct answer

1. The front end of the propeller shaft is connected with
   a) Engine
   b) Clutch
   c) Gear Box
   d) Differential

2. The component which transmits the engine's power from the gear box to the differential is called as
   a) Clutch
   b) Rear Axle
   c) Clutch shaft
   d) Propeller shaft

3. The component which corrects the length of the propeller shaft is
   a) Clutch
   b) Gear Box
   c) Slip Joint
   d) Universal Joint

4. The component which transfers the rotational power from the gear box at certain angle is
   a) Clutch
   b) Propeller shaft
   c) Differential
   d) Rear Axle

5. In a vehicle the part which protects the leaf spring is

BAE_ENG_Chapter_04.indd 71 01/11/2022 11:45:41 AM

a) Differential
b) Shackle
c) Bolt
d) Gage

6. In the universal joint the part which connects the two yokes is
   a) Spider
   b) Driving yoke
   c) Driven Yoke
   d) Engine shaft

7. When the vehicle is taking a turn on the road, the component which helps to rotate the inner wheel at lower speed than the outer wheel is called as
   a) Differential
   b) Universal Joint
   c) Propeller shaft
   d) Rear Axle

8. The part which transmits the rotational power from the propeller shaft to the rear axle is called as
   a) Propeller shaft
   b) Engine
   c) Differential
   d) Clutch

9. In the power transmission system the part which transmits the power at 90^0 angle is called as
   a) Engine
   b) Differential
   c) Gear Box
   d) Wheel

10. The type of rear axle which bears the whole weight of the vehicle is called as
    a) Semi floating axle
    b) Full floating axle
    c) Quarter floating axle
    d) Three quarter floating axle

PART - B

Three mark questions

1. What are the functions of the propeller shaft?
2. What are the types of universal joint?
3. How does the shackle work?
4. What are the types of propeller shaft?
5. Write the functions of the differential
6. Write the classification of the differential
7. What are the types of differential casing?
8. Write the classification of the rear axles?

BAE_ENG_Chapter_04.indd 72 01/11/2022 11:45:41 AM

PART - C

Five mark questions

1. Write advantages and drawbacks of the Hotchkiss Drive
2. Describe the faults and rectification methods of the Differential
3. Explain the construction and working of any one universal joint with a suitable diagram

PART - D

Ten mark questions

1. Explain the construction and working of a differential Unit with a suitable diagram
2. Describe the common faults occurring in the propeller shaft and rectification methods in detail.
3. Explain the construction of any one rear axle with a suitable sketch

BAE_ENG_Chapter_04.indd 73 01/11/2022 11:45:41 AM

UNIT 5

Wheels and Tyres



Contents

5.0 Introduction
5.1 Requirements of the Wheel
5.2 The Properties of the Wheel
5.3 Types of Wheel
  5.3.1 Disc Wheel
  5.3.2 Wired Wheel
  5.3.3 Cast Wheel
5.4 Wheel Dimension
5.5 Tyre
  5.5.1 Types of Tyre
5.6 Properties of The Tyre
5.7 Functions of Tyre
5.8 Tyre Construction
  5.8.1 Bead
  5.8.2 Side Wall Region
  5.8.3 Shoulder Region
  5.8.4 Tread Region
5.9 Tread Types
  5.9.1 Stud Type Tread
  5.9.2 Symmetrical Type Tread
  5.9.3 winter Type Tread
5.10 Ply Rating
  5.10.1 Tyre Size Marking
5.11 Types of Carcass
  5.11.1 Radial Ply Tyre
  5.11.2 Cross Ply Tyre
  5.11.3 Bias Ply Tyre
5.12 Load Rating
5.13 Tyre Pressure
5.14 Selection of Tyre
5.15 Tyre Wear
5.16 Maintenance of Tyre
5.17 Tyre Damages And Repairing Methods
5.18 Tube
5.19 Uses of Tubes
5.20 Puncture
5.21 Puncture Recovering
  5.21.1 Hot Patch Method
  5.21.2 Cold Patch Method
  5.21.3 Vulcanizing
5.22 Tube Damages And Repairing Methods
5.23 Tyre Rotation
5.24 Wheel Balancing

B1NSU

Learning objectives

1. Understanding of different tyres used in vehicles.
2. Understanding the stability of manufactured tubes and tyres.
3. Understanding how wheels are produced with stability and its suitability for use in the vehicle.
4. Understanding how the wheels and tyres withstand the weight of the vehicle on the road and stability of rolling on the road.

BAE_ENG_Chapter_05.indd 74 01/11/2022 11:47:36 AM

5.0 Introduction

It is well known that how important are the wheels and tyres in automobiles. The vehicle can be pulled even with no engine. However, without the wheels the vehicle cannot be moved at all. Furthermore, the wheels and tyres also carry the full load of the vehicle and give smooth ride. Besides that the wheels and tyres help in operating the vehicle in control with the help of the steering.

5.1 Requirements of the wheel

1. Wheel must to bear the full load acting on the vehicle.
2. It must to make the vehicle weight easy to move and steer easy.
3. It must to help to move the vehicle without the engine.
4. It must to withstand vibrations of the road.
5. It must to withstand the braking force when the brake is applied.

5.2 Properties of the wheel

1. It must be able to withstand the full load of the vehicle.
2. The wheels must be at equal in position while driving the vehicle and at rest as well.
3. The weight of the wheels should be less.
4. The wheels must be easy to remove from the axle and fix in the axle.
5. The wheels must be easy to control by steering mechanism.

5.3 Types of wheels

Generally there are three types of wheel. They are

1. Disc wheel
2. Wired wheel
3. Cast wheel

5.3.1 Disc wheel

This type of wheel is commonly used in all automobiles. The Figure 5.3.1 shows the photographic view of disc wheels. Because its structure is very simple and the construction is very strong and cost effective.



Figure 5.3.1 Shows the Photographic view of Disc Wheels

The disc wheel is made of two parts. They are

1. Rim
2. Disc

The structure of the disc wheel can be seen in Figure 5.3.1. The top part of the rim has the provision for fixing the tyre correctly. The disc is connected with the rim by welding. Depending on the size of the wheel and the disc the disc can be made as an integral part of the rim or separate ones. The part of the tyre which is used for place it on the rim is called as the tyre bead. The tyre cannot be removed or fitted if there is no pit in the rim. The tyre fitting area in the rim is generally in tilting angle between 5° and

BAE_ENG_Chapter_05.indd 75 01/11/2022 11:47:36 AM

15°. Therefore, when air is filled in the tyre, the bead makes a tight fit with the rim. In tubeless tyres this tilt structure acts as a tight seal.

The disc in the disc wheel does the work of the spoke. The wheel is fitted on the axle by the bolts. There are holes provided on the wheel disc as shown in the picture. Through these holes air is allowed to enter inside the brake drum and the air cools the brake drum. There is a gap provided for the wheel disc and a hole is made on the rim for placing the tube valve.



Figure 5.3.1.1 Rim and Disc

Advantages

1. The construction of the disc wheel is simple, durable and cheap.
2. Its maintenance is low.
3. It is suitable for all light and heavy vehicles.
4. No curves or bends occur on the wheel.

5.3.2 Wired wheel

Unlike the disc wheel, the hub is located at the center of the wheel and the rim is at the top separately. The rim and the hub are connected by the wires called as spokes. The structure of the wired wheel can be seen in Figure 5.3.2. We can find this type of wheels used in two wheelers such as bicycles and motor cycles. The spokes in the two wheels withstand the vehicle weight, pulling force and braking force. For withstanding these forces the spokes are connected between the wheel hub and the rim. There are splines made in the hub for fixing it on the hub axle. The weight of wired wheel is comparatively lower than the disc wheel and has high cooling efficiency and hence it is used in racing cars.



Figure 5.3.2 Structure of a Spoke / Wired Wheel

Advantages of wired wheel

1. It is lower in weight and has more durability than a disc wheel.
2. It allows the brake drum to cool very quickly and easily.
3. It can be fixed and dismantled easily whenever necessary.

Disadvantages

1. Maintenance cost is high.
2. There are possibilities for bends to occur in the wheel.
3. Tubeless tyres cannot be used because of the holes present in the rim for the spoke wires.

BAE_ENG_Chapter_05.indd 76 01/11/2022 11:47:37 AM

5.3.3 Cast wheel

The modern automotive wheels are generally made up of aluminum or magnesium alloy materials. Figure 5.3.3 shows the photographic view of a cast wheel. Cast wheels are mostly used in cars. The simple structure of this wheel can be seen in figure. Forged wheels are mostly used in heavy vehicles. These types of wheels are less in weight. The wheels made of magnesium alloy are 50% less than the weight of the steel wheel, and the aluminum alloy wheels are 70% less than the weight of the steel wheel. Even though the weight is lower than that of steel wheels these wheels have the strength which is equal to the steel wheels. These metal alloys have the ability to transfer heat and reduce the heat generated in the tyres or brakes. Moreover these materials are used for manufacture the wide rims. This gives more vehicle stability. Magnesium alloy material has the ability to withstand heavy loads. It could also withstand more vibrations and shocks occurred in vehicles.



Figure 5.3.3 A view of Cast Wheel

5.4 Wheel Dimension

The measurement of wheel dimensions could be seen in the Figure 5.4. The wheel dimension has the following letters represented as

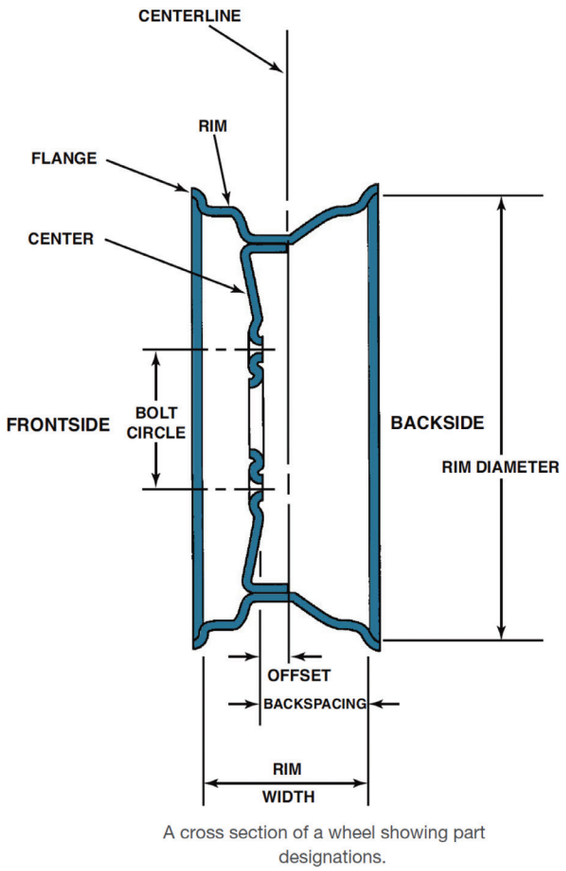

Figure 5.4 Wheel Dimensions

'W' - Width of the wheel.

'D' - Diameter of wheel.

'C' - Type of rim.

Wheels are shown by code number. For example, if the code number of the wheel is given as 5.50 B-13 and 4 ½ J-14 then, it indicates the terms as below.

Wheel Dimensions

Width (W)	Rim type (C)	Diameter (D)
5.50"	B	13"
4 ½"	J	14"

BAE_ENG_Chapter_05.indd 77 01/11/2022 11:47:39 AM

5.5 Tyre

Tyre is fixed on the rim of wheel in the vehicle. The tube in the tyre is filled with air. The tyre carries the weight of the vehicle and gives smooth ride to the vehicle.

5.5.1 Types of tyre

The tyre are classified into the following types,

1. Solid tyre
2. Pneumatic tyre
3. Bullet proof tyre
4. Liquid filled tyre

Solid tyre

This type of tyre is a hard one made up of special type of rubber. There is no tube in it. As it is a solid one it does not withstand vibrations. Hence this type of tyre is mostly not used in automobiles.



Figure View of a Solid Tyre

Pneumatic tyre

This type of tyre is used commonly in all automobiles. The air is filled in the tube of the tyre and hence the tyre is called as pneumatic tyre. The photographic view of a pneumatic tyre can be seen in Figure.



Figure Photographic view of a Pneumatic Tyre

The pneumatic tyre can be classified into two types. They are

1. Tyre with tube
2. Tubeless tyre

Tyre with tube or conventional tyre

The tube assisted tyre is called as the tube tyre. The photographic view of a tube tyre. The cross sectional view of the tube tyre can be seen in the Figure.

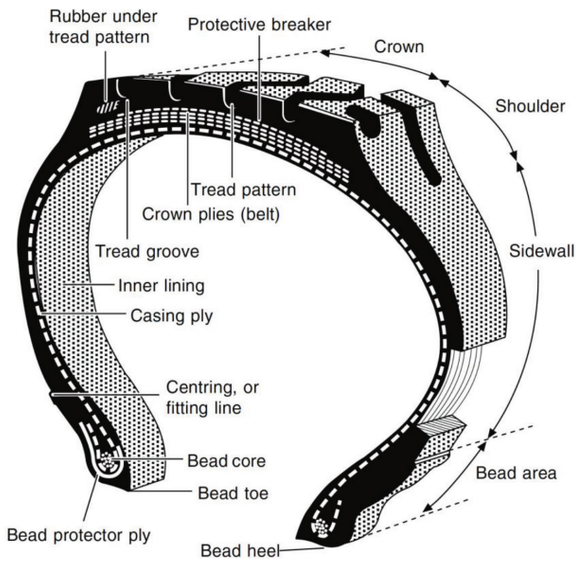

Figure Construction of a Tube Tyre

BAE_ENG_Chapter_05.indd 78 01/11/2022 11:47:40 AM

Tubeless tyre

This tyre does not have any tube inside it. In this type of tyre, the tyre is directly fitted on the rim. The cross sectional view of the tubeless tyre can be seen in the Figure.

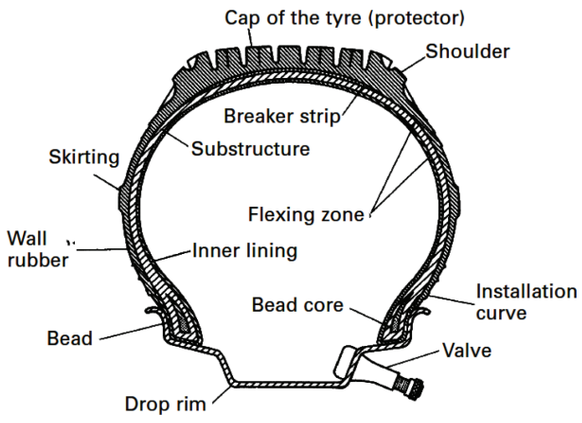

Figure Construction of a tubeless tyre

Advantages

1. Simple in structure.
2. In case of puncture, the tyre can be repaired without removing from the rim.
3. The tyre needs no tube.
4. Maintenance is low.

Bullet proof tyre

In this type of tyres even if the tyre is punctured by the bullet, the air pressure inside the tyre does not decrease and the puncture is automatically corrected by the tyre itself. This type of tyre is used in military vehicles.



Figure Photographic view of the bullet proof tyre

Liquid filled tyre

In this type of tyre the mixture of 15% of calcium chloride 85% of water is used to fill the tyre for about 75% of the total capacity of the tyre. This type of tyre is used in some heavy vehicles and tractors.

5.6 Properties of tyre

The following are the important properties of the tyres

1. It should be more comfort for traveling.
2. It should be able to withstand vibrations of the road sides.
3. The tyre should give stability to the vehicle when the vehicle is negotiating a turn.
4. Vehicle should stop immediately by creating the friction without any slip when applying the brake.
5. It should be able to give very less rolling resistance.
6. The tyre must provide safety to the vehicle when the vehicle moving on the road.
7. The tyre must work for a long period.

5.7 Functions of the tyres

1. It withstands the whole weight of the vehicle.
2. It creates the friction on the road and helps to roll the wheel on the road.
3. It gives road stability for the vehicles.

BAE_ENG_Chapter_05.indd 79 01/11/2022 11:47:40 AM

4. It withstands the vibrations of the vehicle when the vehicle is going on the bumps and pot holes.

5.8 Tyre construction

It consists of the following four parts. They are,

1. The bead region
2. The side wall region
3. The shoulder region
4. The tread region

5.8.1 Bead

Bead is a part of the tyre which is used to fit the tyre on the wheel rim. Bead is made of a circular metal wire placed on both sides of the tyre. In the tyre beads one or more metal wires are covered strongly by the thick nylon or rayon threads around the metal wires. Tyre beads help to keep the tyre shape unchanged.

5.8.2 Side wall region

The side wall of the tyre is constructed to be very flexible. The vertical area between the tyre bead and tyre tread region is called as the side wall region. Wheel tube is fitted inside this region. The tyre marks are made in this side wall area only.

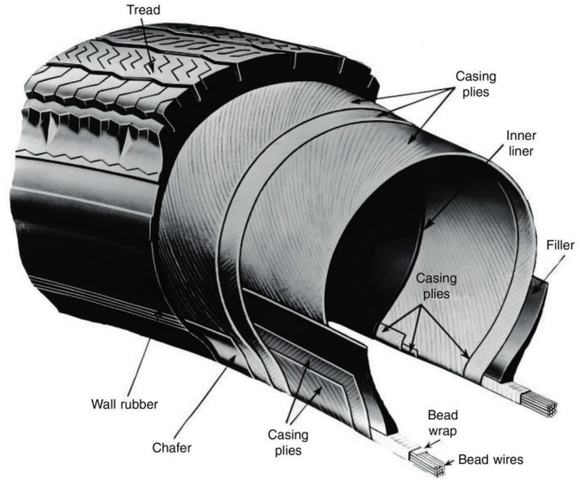

Figure 5.8 Tyre construction

5.8.3 Shoulder region

The horizontal area of region connecting the side walls and the tread is called as the shoulder region. This shoulder region creates a slightly curved look for the tyre area.

5.8.4 Tread region

The top area on the periphery of the wheel that is in contact on the road surface is called as the tread region. For giving good grip on the road, there are different shapes of cross grooves available on this region.

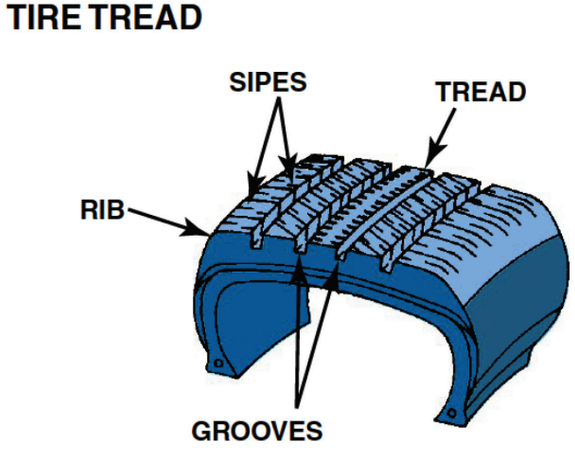

Figure 5.8.4 Tread pattern of a typical tyre

5.9 Tread types

The tread region present in the tyres is of three types. They are

1. Stud type tread
2. Symmetrical type tread
3. Winter type tread

BAE_ENG_Chapter_05.indd 80 01/11/2022 11:47:40 AM

5.9.1 Stud type tread

This type of tread is used in the front tyres of the normal Jeep and tractor. The tyre has small button shapes to be present on the circular area of tyre.

5.9.2 Symmetrical type tread

This type of tread is used in the wheels of light duty vehicles and cars. The cross section of the tread in this tyre is bent over the surface on the circumferential surface of the wheel.

5.9.3 Winter type tread

This type of tread is made on the rear wheels of special vehicles such as tractors and earth movers. The buttons of the tread in this tyre are very large and very height.

5.10 Ply rating

The part of the tyre which is made of cotton or nylon or rayon threads threaded to the tyre is called as the ply of the tyre. As all the plies are wound tightly on the round bead wires which are made of steel the shape of the tyre is not changed. It is always circular in shape.

The strength and thickness of the tyre depend on the number of plies present in the tyre. Increasing the plies increases the strength of the tyre. Scooter, motorcycle and bikes have the tyres with less plies

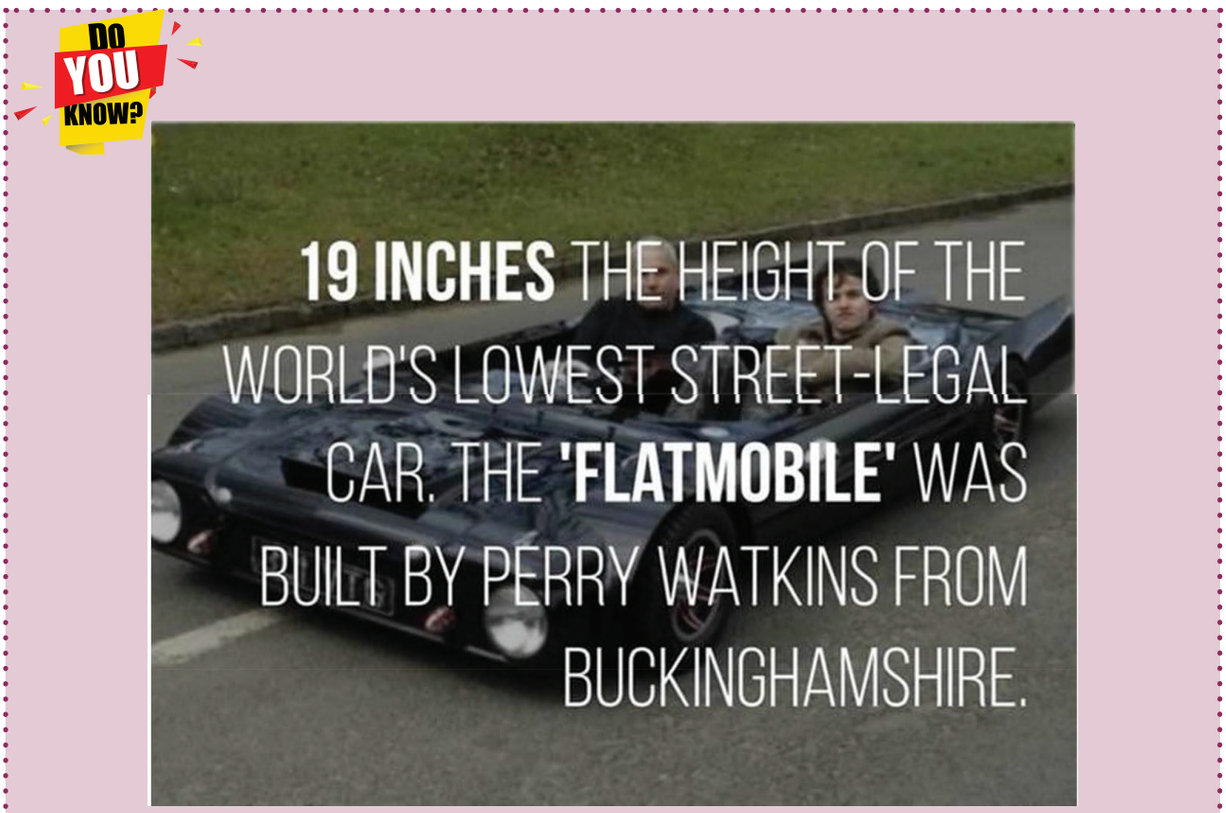

BAE_ENG_Chapter_05.indd 81 01/11/2022 11:47:41 AM

and the cars have the tyres with more plies. In heavy vehicles the ply rating is more than to that of the car tyres. The air pressure and the tyre size are defined based on the tyre plies. Ply rating is the number which generally indicates the strength and the stability of the tyres.

5.10.1 Tyre size marking

For example at the sideway of the tyre if the tyre is marked as 3.5" x 10" x 4 PR, which represents the tyre size marking. The tyre size is marked as indicated below.

Width of the Rim	Diameter of the Rim	Strength of the tyre
3.5"	10"	4 PR

Note: PR – Ply Rating

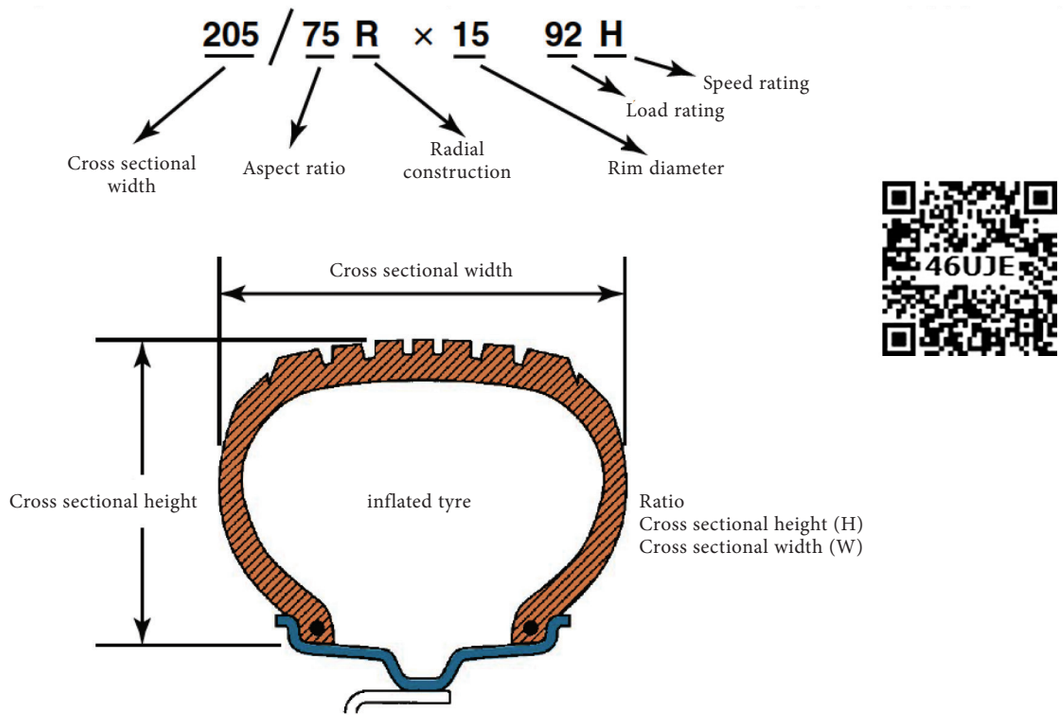

Figure 5.10.1 The tyre specifications.

5.11 Types of tyres based on carcass

1. Radial ply tyre
2. Cross ply tyre
3. Bias ply tyre

5.11.1 Radial ply tyre

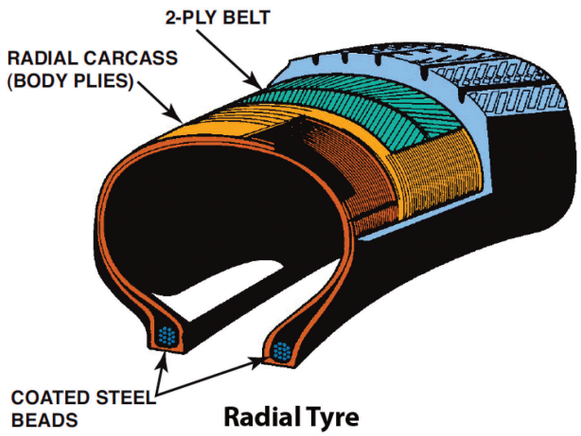

Figure 5.11.1 View of a radial ply tyre

BAE_ENG_Chapter_05.indd 82 01/11/2022 11:47:41 AM

The nylon or rayon layers which connect the beads on both sides of the tyre are arranged in the same direction. This type of tyre is called as radial ply tyre. In this type of tyres the stability and comfort are more. However, while negotiating a turn on the bends of the road the stability of the tyre is less. Figure 5.11.1 shows the view of a radial ply tyre.

5.11.2 Cross ply tyre

Nylon or rayon layers that connect the beads on both sides of the tyre are arranged in the opposite (at the angle of 40° to 45°) direction. This type of tyre is called as cross ply type tyre. As the tyre is made the plies with cross winding the tyre gets more strength. A view of the cross ply tyre can be seen in Figure 5.11.2.

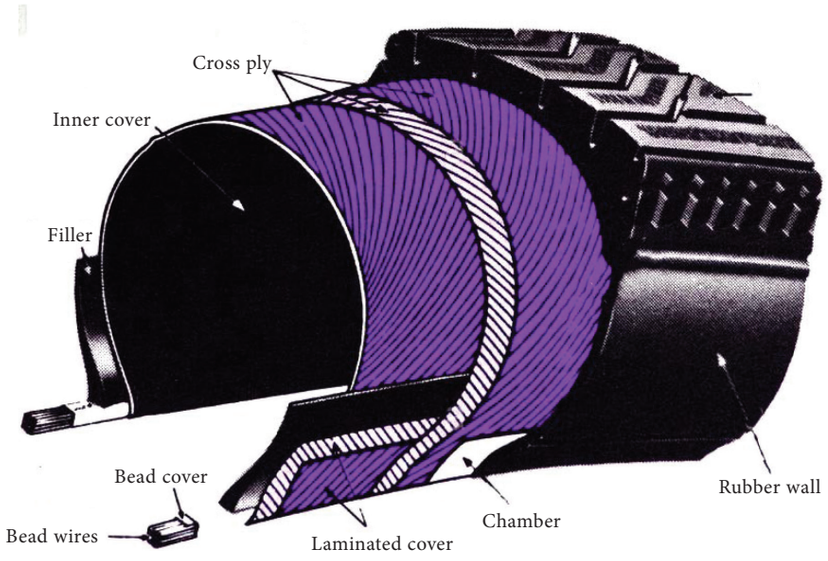

Figure 5.11.2 View of the cross ply tyre

5.11.3 Bias ply tyre

The combination of the tyre construction with radial ply tyre and cross ply tyre is said to be the bias ply tyre. This type of tyre is very strong and has more stability. Figure 5.11.3 shows the concept of bias ply tyre.

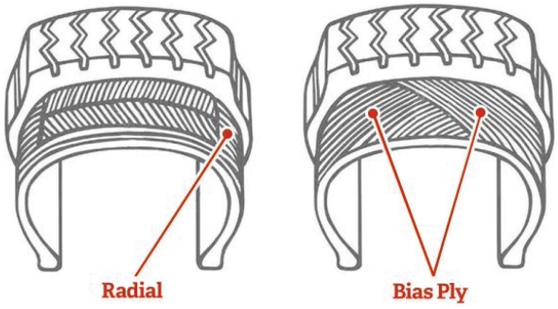

Figure 5.11.3 Bias Ply concept

5.12 Load rating

The tyre's strength, tyre dimensions and it's load carrying capacity are represented by the term called as the load rating.

5.13 Tyre pressure

The air stored at high pressure inside the tyre withstands all the loads

BAE_ENG_Chapter_05.indd 83 01/11/2022 11:47:41 AM

acting on the vehicle. If the air pressure is high or low from its specified pressure then there will be negative effects which will be caused by the tyre to the vehicle. Hence, based on the ply rating, vehicle speed and the load of the vehicle, the air pressure is mentioned or recommended by the vehicle manufacturer.

5.14 Selection of the tyre

The tyre selection for any vehicle is based on the following considerations

1. It should work for a long time.
2. The price of the tyre should be low and should have good quality.
3. The tyre must have the required tread pattern and ply rating for the specific application.
4. The tyre must have the good quality rubber mixture.

5.15 Tyre wear

The tyre wear occurs due to the following reasons,

1. Due to the pressure of the air filled in the tyre is lower or higher than its specified pressure
2. Due to the reasons of suddenly and frequently applying the brake.
3. If the wheel is not fixed properly on the axle.
4. If there are wear on the bearings of the wheels.
5. If the vehicle carry's more loads.
6. The wheel alignment angles such as caster and camber are not set correctly as per the recommendations.
7. If the load on the vehicle is not balanced.

5.16 Maintenance of Tyre

The long life of the tyre could be possible by proper maintenance of the tyres. The following are the points to be followed for good tyre maintenance.

1. The required amount of air should be filled and maintained correctly.
2. The air pressure has to be checked by using the pressure gauge at least once in a week.
3. If there is any grease or oil present in tyre, it must be cleaned.
4. The tyre should not be overloaded.
5. Often braking the vehicle or unnecessarily braking during high speeds of the vehicle have to be avoided.
6. The vehicle should not be turned quickly when running on bends.
7. The tyre must be checked for its position on the axle whether it is placed on the rim with straight and stable condition or not.

5.17 Tyre repairs and rectification methods

Repairs	Repairing methods
Tyre wear on one side	Correct the wheel alignment
Tyre wear at the center	Maintain the tyre pressure.
The tyre pressure reduced often	Valve in the tube should be corrected
Explosion or scratches occurring in tyre.	Should carry specified load
Tyre wear occurring soon	Correct the wheel alignment

BAE_ENG_Chapter_05.indd 84 01/11/2022 11:47:41 AM

DO YOU KNOW?

In 1888, John Dunlop invented the air-filled or pneumatic tyres.

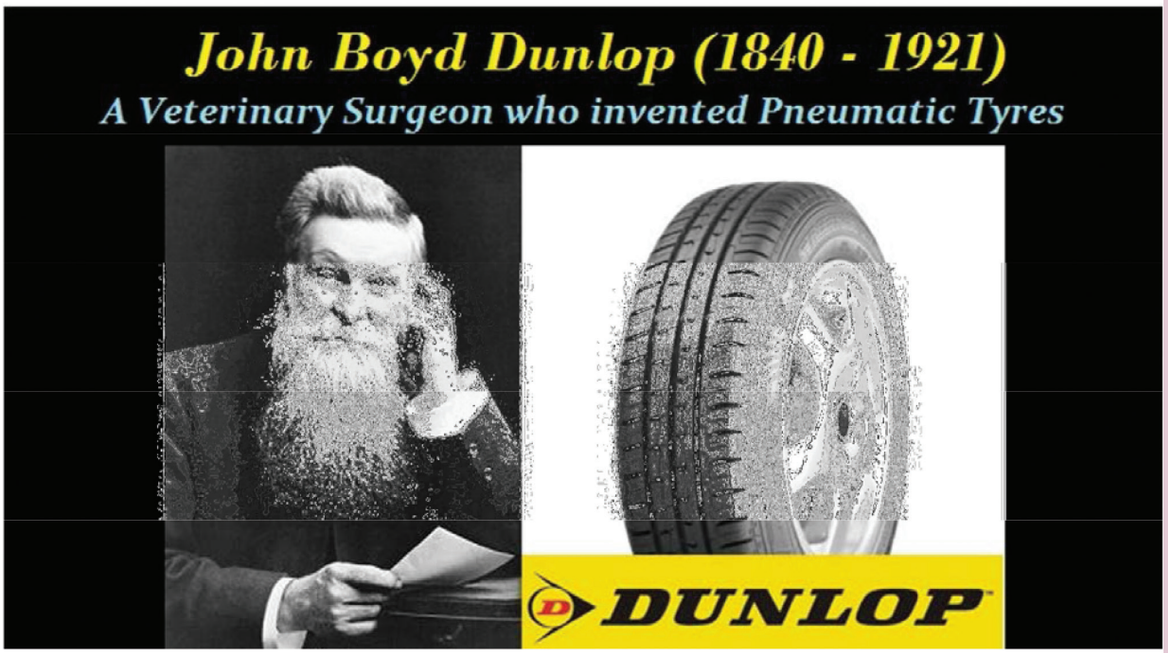

5.18 Tube

A blanket cover like part which is used for storing the air inside the tyre is called as the tube. It is made up of natural or synthetic rubbers. For injecting and releasing air in the tube, tube valve is used. It is a one way valve which helps to send air to the tube but not allows the air to release or return from the tube.

5.19 Uses of tubes

1. They store the required amount of air.
2. They provide smooth travel for the vehicles.
3. They withstand the weight of vehicle.
4. They withstand the vibrations occurred in between the road and vehicles.

5.20 Puncture

If any sharp objects or things like nails stab the tyre and make the air to leak, then we call it as tyre puncture.

5.21 puncture recovering

The method of repairing or rectifying the effects caused by the holes in the tube or any cut injury in the tube is called as puncture repair. The tube puncture is repaired by three different ways. They are

1. Hot patch method
2. Cold patch method
3. Vulcanizing

BAE_ENG_Chapter_05.indd 85 01/11/2022 11:47:41 AM

5.21.1 Hot patch method

For this method a vulcanizing machine is required. This type of method is often used for repairing large size punctures, tube bursts, and in replacing the mouth in the tube. To repair the puncture, the punctured area on the tube is first noted. The punctured area was rubbed with the help of an emery / file sheet for some and a rubber solution is pasted on it. Based on the size of the puncture hole a small piece of rubber tube was cut and pasted on the punctured area. The pasted area is then placed on the vulcanizing machine and clamped. By supplying the power to the vulcanizing machine by switching on the machine the heating element in the vulcanizing machine heats the punctured area under pressure and makes the hole closed.

5.21.2 Cold patch method

Using an emery sheet or file the punctured area is rubbed on the tube. The rubber paste is applied on the rubbed area and dried for some time. Based on the size of the punctured hole a small piece of rubber tube is binding sticker is pasted on the hole. Nowadays the binding stickers are available for specified sizes also. Mostly small sizes of punctures are repaired by this method.

5.21.3 Vulcanizing

If there is a small hole in tube, it can be repaired by using any one method as discussed above. However, if the hole is very large, or more air is leaked from tube valve, we have to go for vulcanizing method for repairing the puncture. To perform this, initially the both damaged area on the tube and rubber to be pasted are rubbed well. Then the vulcanizing paste is applied on both the rough areas of the tube and the sticker and left for some time to dry. The dried rubber sticker is now pasted on the rubbed area of the tube and pressed well. The pasted tube is now kept on the vulcanizing machine and tightened. Now the vulcanizing machine is switched on and left it for heating the tube area until the indicator light starts to lighten. Then the machine is switched off and the tube is removed from vulcanizing machine. Figure 5.21.3 shows the method of vulcanizing.



Figure 5.21.3 The method of vulcanizing.

5.22 Tube damages and repairing methods

Causes	Remedies
Air leaks in the tube automatically	Correct the tube valve or puncture in the tube.
Oftenly tube puncture	Change new tube.
Tube wear quickly	Fix the flab in between tube and tyre.
Tube bursts	Load the vehicle according to the recommended weight.

BAE_ENG_Chapter_05.indd 86 01/11/2022 11:47:42 AM

5.23 Tyre rotation

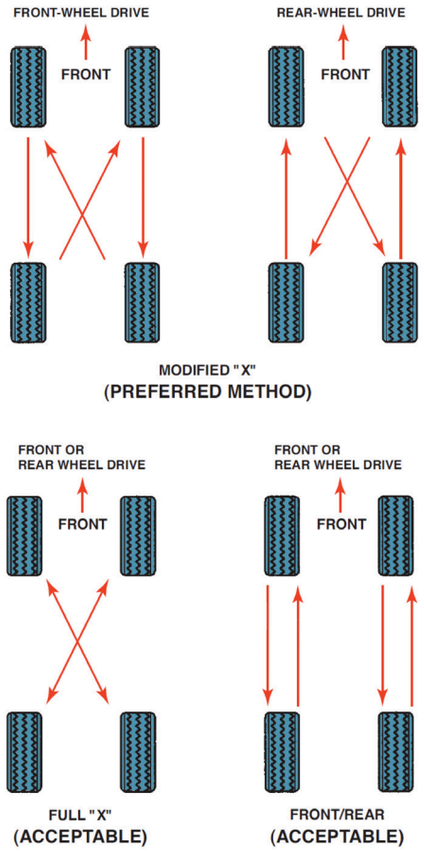

Figure 5.23 Wheel Rotation procedure

In general the tyres in the vehicle are subjected to wear but the amount of wear on the four wheels is not uniform. The tyres in the rear wheels of the vehicle wear more quickly than the front wheels due to the power transmission to the rear axle. Right side wheels generally wear twice in amount than the left wheels. Hence, based on the manufacturers' guidelines tyres are rotated and fitted in the vehicles after the vehicle is travelled to certain kilometers. In cars and commercial vehicles for about 8000 km of the vehicle's travel the tyre is changed based on rotational mode.

The right side of the rear wheel tyre is changed to left front tyre. Left side front tyre is changed to right front tyre. The right front wheel is kept as a spare wheel. The other wheel is changed to right rear wheels. This method of changing the wheels is called as tyre rotation. The figure 5.19 indicates the method of tyre rotation.

5.24 Wheel balancing

If the wheels are allowed to rotate then must rotate uniformly and smoothly without any vibrations. If there is no proper rotation of the wheels the weight of the rim must be balanced for uniform rotation of the wheels and this is method is called as wheel balancing. The rim weight is adjusted by moving different lead metal weights on the rim. Figure 5.24 shows the balance weight placed on the rim



Figure 5.24 Wheel balancing

Advantages of wheel balancing

1. It reduces the tyre wear.
2. It helps in steering the vehicle easily.
3. It reduces wobbling of the vehicle.

Types

1. Static balancing
2. Dynamic balancing

BAE_ENG_Chapter_05.indd 87 01/11/2022 11:47:42 AM

Student Activity

1. Send the students to vulcanizing workshops for observing puncture repairing methods and ask to submit the report.
2. Send the student to workshop for finding the wheel rotation and ask to draw cross sectional view.

Glossary

1.	Wheel	–	சக்கரம்
2.	Hot patch	–	வெப்பப்படுத்தி ஒட்டுதல்
3.	Cold patch	–	குளிரவைத்து ஒட்டுதல்
4.	Vulcanizing	–	வல்கனைசிங்
5.	Wheel balancing	–	சக்கரங்களை சமநிலைப்படுத்துதல்
6.	Spokes wheel	–	கம்பி சக்கரம்
7.	Tyre ply	–	டயரின் அடுக்கு
8.	Cast wheel	–	உருக்குச் சக்கரம்
9.	Disc wheel	–	தட்டுச் சக்கரம்
10.	Dynamic balancing	–	இயக்க நிலை சமன்படுத்துதல்

References

1. S.K. Gupta, A Text Book of Automobile Engineering, S. Chand and Company, New Delhi, ISBN 978-93-837-4691-0, First Edition 2014, Reprint 2016.
2. Automobile Engineering, 2nd Edition, Sci Tech Publications (India) Pvt Ltd, 2011. Ramalingam. K.K.
3. Kirpal Singh, Automobile Engineering, Vol 1, Standard Publisher and distributor, ISBN – 13 – 978-8180141966
4. Jack Erjavec- Automotive Technology_ A Systems Approach -Delmar Cengage Learning (2009) ISBN-13: 978-1428311497
5. James D. Halderman, Automotive Technology, Principles, Diagnosis and service, fourth Edition, 2012, Prentice Hall, ISBN - 3: 978-0-13-254261-6
6. K.K.Jain and R.B.Asthana, Automobile Engineering, Tata McGraw-Hill Publishing Company Limited, New Delhi
7. R.K.Rajput, A Text Book of Automobile Engineering, Laxmi Publications, New Delhi.
8. A.K. Babu & Er. Ajit Pal Singh, Automobile Engineering, S.Chand Publishing, New Delhi
9. Internal Combustion Engines by V. Ganesan, Tata McGraw-Hill Education, 2004
10. Automotive Mechanics by William Crouse, Donald Anglin

BAE_ENG_Chapter_05.indd 88 01/11/2022 11:47:42 AM

Webliography

1. https://www.carthrottle.com/post/different-wheel-types-and-how-theyre-manufactured/
2. https://www.zigwheels.com/guide/four-wheeler-tyre-guide/different-types-of-tyres/18816/
3. https://pmctire.com/en/info/tire-specifications/tire-load-range-ply-rating.tire
4. http://www.abrasiontesting.com/understanding-wear-abrasion/types-wear/
5. https://www.michelin.co.uk/tyres/learn-share/care-guide/three-main-causes-of-tyre-problems
6. https://www.thoughtco.com/the-what-why-and-how-of-wheel-balancing-3234378
7. http://rapcoasphalt.com/asphalt-patching-and-pothole-filling-hot-or-cold-patches/

Evaluation

WZOGD

PART - A

One mark questions

Choose the correct answer

1. Which one of the following indicate the solidity of the tyre
   a) Carcass
   b) bead
   c) tread
   d) ply

2. Specify the type of tyre which uses the tube
   a) Solid Tyre
   b) Tubeless Tyre
   c) Tubed Tyre
   d) Liquid Filled Tyre

3. The cause of wear in the center portion of tyre is due to the
   a) Low Air
   b) High Air
   c) Wear On Bearings
   d) None Of These

4. If there is an occurrence of leakages in tubes then it is called as
   a) Vulcanizing
   b) hot batch
   c) puncture
   d) tread

5. The basic construction of tyre is said to be
   a) Ply Rating
   b) Tread
   c) Bead
   d) Carcass

6. Types of tyres is.
   a) 2 b) 3
   c) 4 d) 5

BAE_ENG_Chapter_05.indd 89 01/11/2022 11:47:42 AM

7. It is connects the rim with hub.
   a) Wheel
   b) Spokes
   c) Tyre
   d) Tube

8. How many types of treads?
   a) 2
   b) 3
   c) 5
   d) 4

9. Tyre ply rating means
   a) wheel dimension
   b) tyre dimension
   c) tube dimension
   d) tyre strength

10. It is placed at both edges of the tyre.
   a) Bead
   b) Car cass
   c) Ply rating
   d) Tread

Part - B

Three mark questions

1. What is the working of wheel?
2. What is the working of tyre?
3. Answer any two maintenance of the tube.
4. What is meant by carcass?
5. What will happen if the air pressure is low in tyre?

Part - C

Five mark questions

1. Draw the disc wheel diagram and mention its parts.
2. Give any five reasons for wear occurrence in tyres.
3. Describe the tyre rotation?

Part - D

Ten mark questions

1. What are all the methods of repairing puncture of wheels? Explain any one method in detail.
2. Tabulate the faults occurred in tyres and repairing methods.

BAE_ENG_Chapter_05.indd 90 01/11/2022 11:47:42 AM

UNIT
6

Braking System



JG01A

Contents

6.0 Introduction
6.1 Functions of Braking System
6.2 Requirements of Braking System
6.3 Types of Brake
  6.3.1 Mechanical Brake
6.4 Types of Power Brake
  6.4.1 Hydraulic Brake
  6.4.2 Air Brake
  6.4.3 Servo Brake
  6.4.4 Engine Exhaust Brake
6.5 Disc Type Brake
6.6 Antilock Braking System
6.7 Hand Brake
6.8 Common Components of Braking System
  6.8.1 Brake Drum
  6.8.2 Brake Shoes
  6.8.3 Brake Linings
6.9 Brake Adjustments
  6.9.1 Minor Adjustment
  6.9.2 Major Adjustment
6.10 Brake Pedal Free Play
6.11 Brake Efficiency
6.12 Stopping Distance
6.13 Brake Testing
  6.13.1 Stopwatch Test
6.14 Trouble Shooting

BAE_ENG_Chapter_06.indd 91 01/11/2022 11:50:54 AM

Learning objectives

1. To understand the need and types of braking system.
2. To understand the parts of all types of braking system and their working principle.

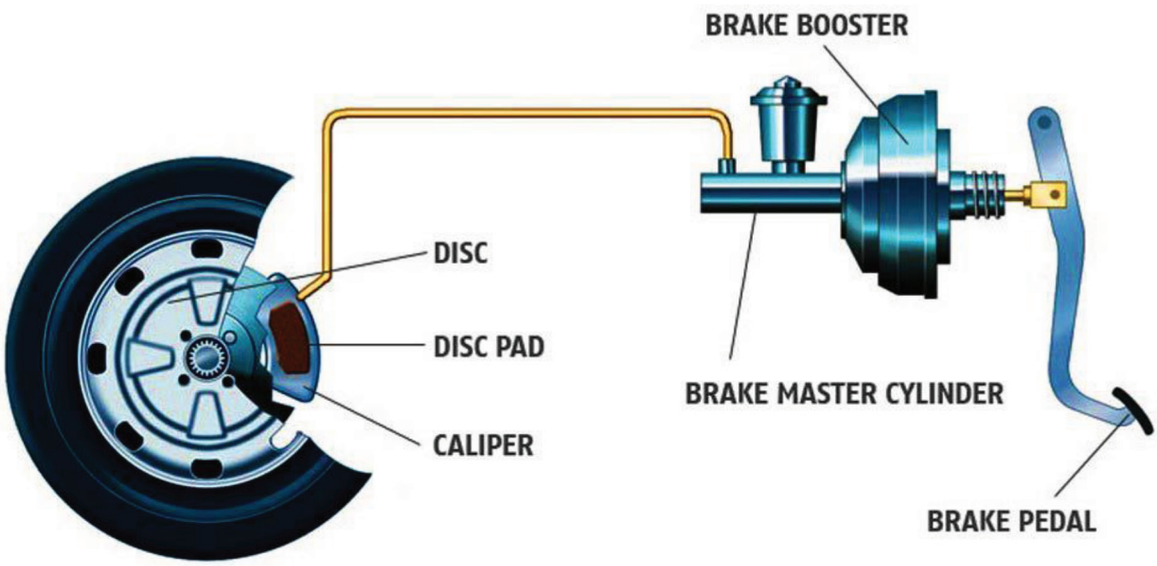

6.0 Introduction

For the safe and accident free travel the vehicle must be driven under control. we have to drive the vehicle with control. All the mechanical devices invented by human beings must be controlled by the human. As compared to the earlier automobile vehicles, the modern automobile vehicles are faster in speed. Such vehicles are controlled by the controlled system provided in the vehicles. Braking System is one among the important systems in controlling these fastest vehicles. The driver (for him and for the passengers) can stop the vehicle whenever he needs to stop it without causing any disturbances to the person inside the vehicle and for the vehicle coming in the opposite direction by using the system called as braking system.

6.1 Functions of braking system

The important functions of the braking system are

1. To reduce the speed of the vehicle in a controlled level by using the braking system.
2. To stop the vehicle within the specified distance or suddenly as per the condition of the road.
3. To control the speed of the vehicle while climbing down from the hill station roads and bends.
4. To park the vehicle permanently in particular place.

6.2 Requirements of braking system

1. It should be easy to operate, powerful, and reliable.

BAE_ENG_Chapter_06.indd 92 01/11/2022 11:50:54 AM

2. Vehicle must stop immediately after applying the brake.
3. Brake shoes and brake linings should have better anti-wear property.
4. It should not be over sensitive.
5. It must be durable and have less maintenance.
6. The operation of the braking system should not interfere the operation of the other systems of the vehicle.
7. Braking system should not be noisy during its operating condition.

6.3 Types of brake

The brakes are classified into a number of types. They are,

i. According to the application

1. Normal brake or foot brake
2. Hand brake or parking brake

ii. According to application of brake shoe

a. Drum type brake
   1. Internally expanding type brake
   2. Externally contracting type brake
b. Disc type or caliper type brake

iii. According to the power

1. Mechanical brake
2. Hydraulic brake
3. Air brake
4. Vacuum brake and
5. Electric brake

6.3.1 Mechanical brake

Mechanical brakes are classified into two different types, they are shown as follow

1. Internal Expanding Brake
2. External Contracting Brake

Internally Expanding Brake

In this braking system the brake shoes are mounted inside of brake drum and the lower ends of brake shoes are connected with help of anchor pins and brake carrier plate. Based on this the movement of brake shoe is positioned. In between the upper ends of brake shoes one brake cam is mounted. Brake pedal is located at the right side corner of the driver's leg. When the brake pedal is pressed, a long rod which is connected with the brake cams in the four brake carrier plate simultaneously are expanded inside the brake drum which causes friction that stops the rotating wheel. When the brake pedal is released, the brake cam is brought to its original position. The brake shoes are also brought to their original positions at the same time without touching the brake drum due to the spring's compressive force. Hence the wheels on the brake drum rotate immediately without any friction.

Externally contracting type brake

This type of braking system is mostly used in cars as hand brake. In this system the outer layer of the brake drum has a brake lining which is contact with the brake band. The brake band is operated by brake lever and the linkages to stop the rotating brake drum. By pulling the hand brake lever, the brake band is forced to press the brake drum tightly. Hence the rotation of brake drum is stopped and the vehicle is stopped. When the hand lever is released, the brake band

BAE_ENG_Chapter_06.indd 93 01/11/2022 11:50:54 AM

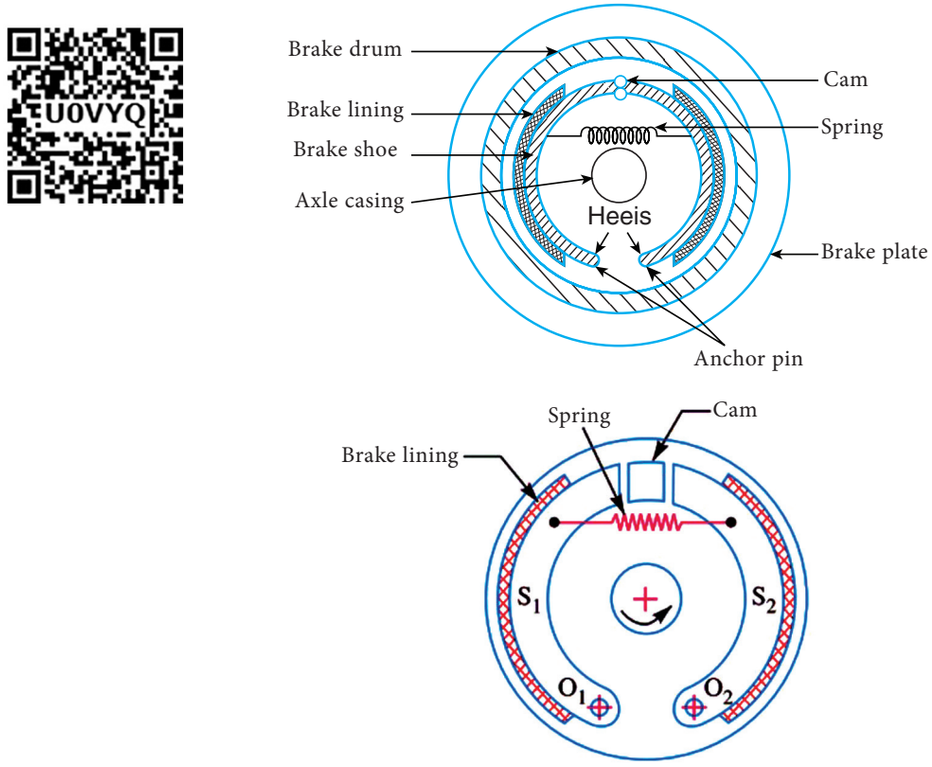

Figure 6.3.1.1 View of the Internal expanding shoe brake and the forces acting on it

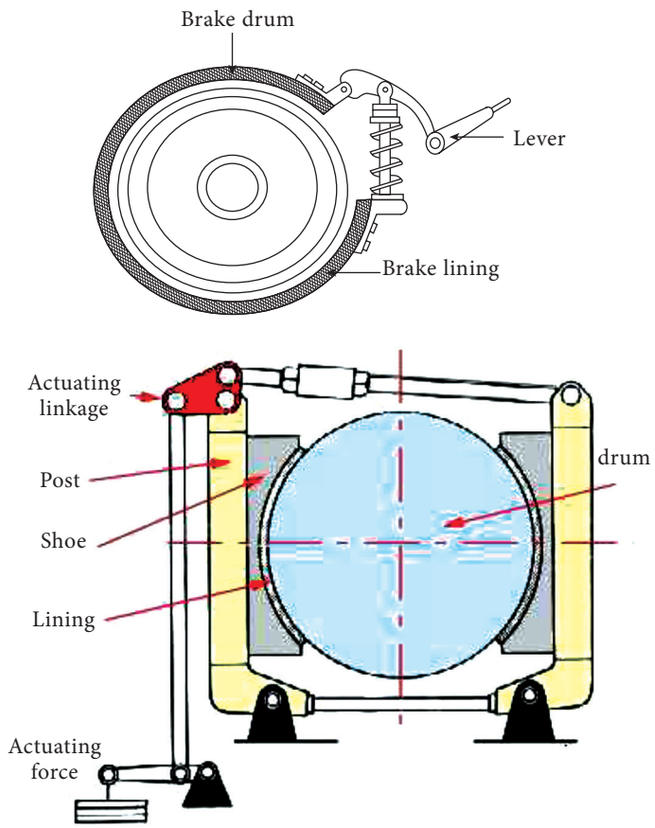

Figure 6.3.1.2 View of the externally contracting type brake

BAE_ENG_Chapter_06.indd 94 01/11/2022 11:50:55 AM

is loosened and the force acting on the brake drum is released. Due to this action the wheels connected with the brake drums are started to rotate without any difficulties. Figure 6.2 shows the view of an externally contracting type brake used in cars.

6.4 Power brake

In mechanical braking system, when the braking force is applied by the driver by pressing the brake pedal due to the mechanical advantage combined with braking force the vehicle is stopped. However, when the vehicle's weight and speed are increased, the mechanical braking system will be no longer capable of providing sufficient braking force to stop the vehicle immediately. Hence for providing sufficient power to the mechanical braking system and to increase the braking force we use any one of the following support as a supplemental force. This type of brake is called as power brake. This power brake is classified according to the following categories as

1. Hydraulic brake
2. Air brake
3. Vacuum brake
4. Electric brake
5. Servo brake

6.4.1 Hydraulic brake system

The schematic view of the hydraulic braking system can be seen in Figure 6.4.1.

The hydraulic braking system works based on the principle of Pascal's law. It is simple in construction and can provide more braking force. The hydraulic brake is capable of delivering the braking

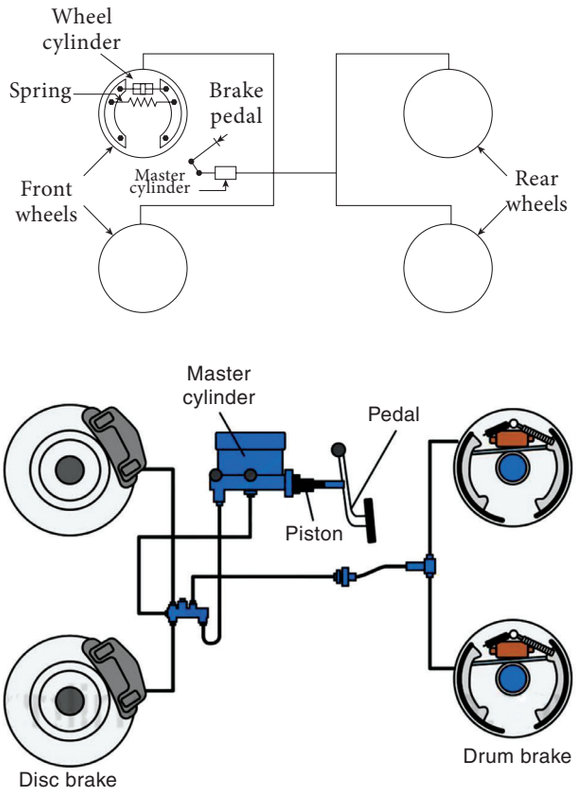

Figure 6.4.1 The schematic view of the hydraulic braking system

force evenly to all the wheels at a time, smoothly and consistently for all the wheels. Therefore most of the cars and some of the two wheelers are employed with hydraulic braking system.

Construction and working principle of hydraulic brake system

The construction of the hydraulic brake system could refered from the Figure 6.3. The hydraulic brake system consists of a master cylinder and wheel cylinders which are the two important components of the system. The master cylinder is used to store the brake fluid. One side of the master cylinder is connected with brake pedal and on the other side there is a pipe line which connects the wheel

BAE_ENG_Chapter_06.indd 95 01/11/2022 11:50:55 AM

cylinders that are kept separately on the back plates.

When the brake pedal is pressed, the brake fluid inside the master cylinder is pressurized and sent to the wheel cylinders through four pipe lines and pushes the pistons inside the cylinder in outward direction. At that time the brake shoes which are connected to the pistons get expanded and force the rotating brake drum to stop which stops the rotation of the wheel.

When the brake pedal is released the pressure of the brake fluid in the master cylinder is reduced. This causes the piston in the master cylinder to come back to its original position due to the spring's action. Thus, pressure in the brake lines is reduced completely. Due to the drop in pressure of the brake fluid, the piston inside the wheel cylinder is move inward. Due to this action, the brake shoes get contracted by the return spring and moved away from the brake drum. Thus, the wheels are allowed to rotate freely. By this way, returning action of piston in the wheel cylinder makes the brake fluid to return back to the master cylinder.

Merits and demerits of hydraulic brake system

The following are the merits and demerits of the hydraulic braking system used in automobiles.

Merits

1. Unlike the mechanical brakes it is simple in construction with no mechanical lever and linkage.
2. The braking force in this system is uniformly distributed to all the wheels.
3. Parts of this system are self-lubricated.
4. It occupies less space.
5. More braking efficiency could be achieved.
6. The braking force is equally shared for all the four wheels.
7. Even for small force of the driver on the brake pedal, the master cylinder multiplies the pressure and gives increased mechanical advantage.
8. Due to the possibility in varying the diameter of the brake pipe lines from the wheel cylinders, variable braking efficiency could be achieved.

Demerits

1. Even a small leakage in the brake lines makes the entire system failure.
2. The air entering into the system reduces the braking efficiency.
3. There is a chance of oil leakage from wheel cylinder. Due to this the frictional force and braking force get reduced in between brake drum and brake shoe.

Quality of the brake fluid

The brake fluid is an important part which acts as a brake force transmitter in the hydraulic braking system. The compression of the brake fluid increases the pressure in the system. However the volumetric capacity of the fluid does not change. The pressure applied at one point on the fluid is equally distributed in all directions, based on the scientific law Pascal by that way the hydraulic braking system works. The brake fluid is generally made up of glycol with different alcoholic additives. In addition, the brake fluid can also be prepared by good quality silicon based fluids.

BAE_ENG_Chapter_06.indd 96 01/11/2022 11:50:56 AM



Figure 6.4.1.1 Quality of the brake fluid

In general the quality brake fluids such as DOT3, DOT4, DOT5, DOT5.1 are commonly used in modern vehicles. These brake fluids are certified by the Society of Automotive Engineers (S.A.E). The DOT3 type brake fluid is widely used in both cars and heavy vehicles.

Requirements of a brake fluid

The following are the important requirements of a brake fluid to be used in automobiles.

1. It should withstand high temperature. The boiling point of the brake fluid should be approximately 300°C.
2. Even at high temperatures the brake fluid should not lose it's viscosity and lubricity.
3. It should lubricate the various parts of the braking system.
4. It should not react and corrode with the rubber and metal parts of the braking system.
5. It should not lose its properties when it is stored for very long time (upto the maximum of 3 years).

Parts of the hydraulic braking system

The hydraulic braking system of an automobile consists of the following parts

1. Brake pedal
2. Master cylinder
3. Brake Fluid pipelines
4. Hose pipes
5. Wheel cylinder
6. Brake shoes
7. Brake linings
8. Return springs

The parts listed above are discussed in the following paragraphs.

Master cylinder and its type

Master cylinder acts as the heart of the hydraulic braking system. By pressing brake pedal, master cylinder supplies the required amount of the pressurized brake fluid to the wheel cylinders for expanding the brake shoes of the wheel cylinder. There are three different types of master cylinders used in automobiles. They are

1. Simple master cylinder
2. Tandem master cylinder
3. Center valve type master cylinder

Among the above types, the first two are mostly used in automobiles. The details of construction and working principle of the above two cylinders are discussed below.

Simple type master cylinder

Construction

The master cylinder is generally made up of cast iron material. The master cylinder consists of a reservoir tank for storing brake fluid and a compressor unit for operating the braking system. In these two parts are completely filled with brake fluid. In the top of the reservoir unit there

BAE_ENG_Chapter_06.indd 97 01/11/2022 11:50:56 AM

is a filler cap fitted for pouring the brake oil and it is closed tightly. In the filler cap a small air vent hole is provided for maintaining the atmospheric air pressure in the reservoir. The sectional view of the master cylinder can be seen in Figure 6.4.1.3. The piston travels front and back inside the reservoir chamber. The push rod and brake pedal are connected with each other.

As the return or helical spring is placed in front of the piston, the piston always stays in the direction where the push rod stays. With this arrangement a check valve is also connected with four wheel adapter for transferring brake fluid to four wheels. In addition to this operating system a brake light switch is also connected. There are two ports called as inlet port and bypass port located on the wall which separates reservoir tank and compressor unit. The inlet port is made as slightly larger, whereas the bypass port is smaller in their construction. In the front face of the piston small feed holes are provided. In front of the feed holes a primary rubber cup is also present.

These feed holes allow the brake fluid to move from backside of the piston to the front. A check valve and a return spring are provided in front of the primary rubber cup. A secondary rubber cup is also located at the back side of the piston for avoiding brake fluid leakages. In this arrangement, the check valve and primary rubber cup arrangement act as one way valve.

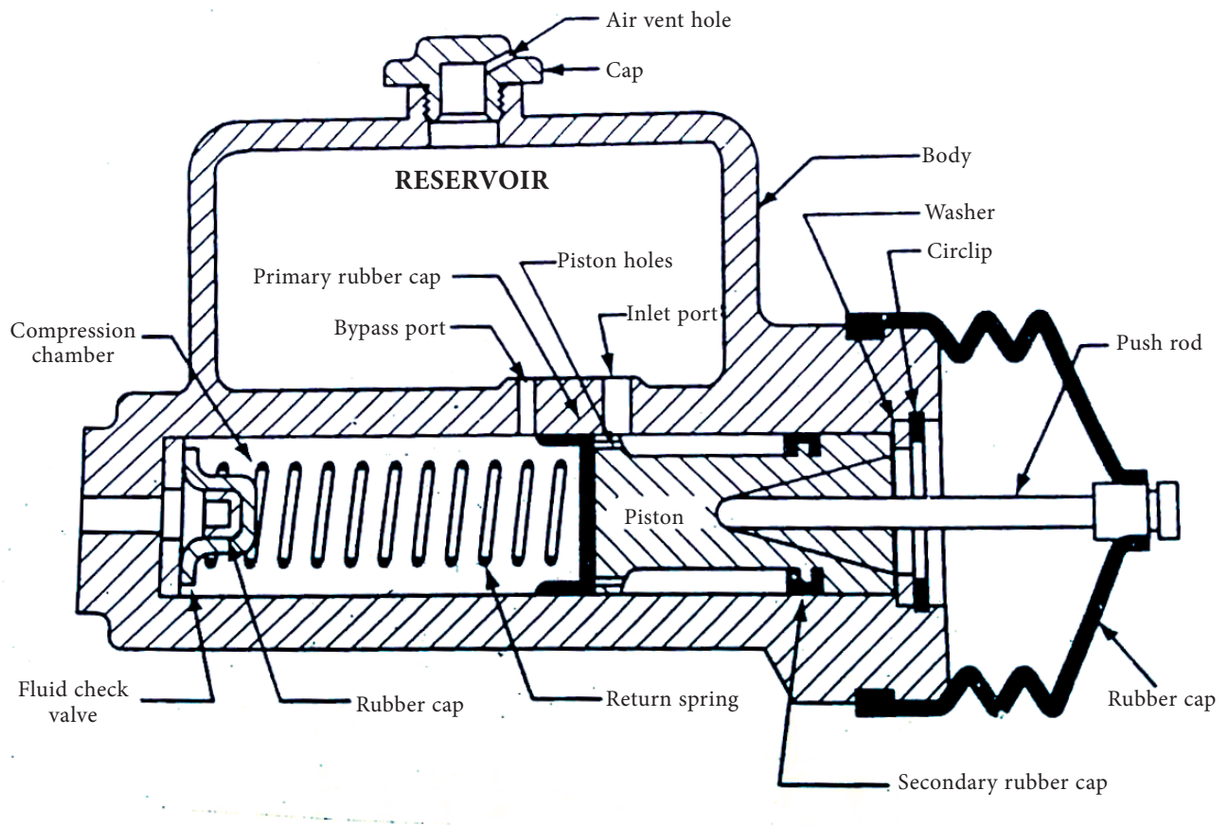

Figure 6.4.1.2 (a) Sectional view of a master cylinder

BAE_ENG_Chapter_06.indd 98 01/11/2022 11:50:56 AM

Working of master cylinder

When the brake pedal is pressed

Normally, the piston inside the master cylinder is positioned in the backward position due to the action of the tensile force of the return spring. Hence due to the opening of inlet and bypass ports the brake oil is filled at the front and back side of the piston. When the brake pedal is pressed by the driver, the piston rod connected to the brake pedal pushes the piston in the forward direction. Because of this action, the two holes are sealed and fluid is pressed well. The compressed fluid is then passed through the one way valve to the wheel cylinder through the pipe lines connected with it. Now the two pistons inside the wheel cylinder are pushed outward. Because of this action the brake shoes are expanded with help of the piston's push rod which forces the brake drum to stop from rotation and stops the wheel from the rotation.

When the brake pedal is released

The pressure inside the master cylinder is reduced. At the same time due to the tensile force of return spring brake shoes are relieved from the brake drum and pulled towards in. Hence the pistons inside the wheel cylinders are moved inward. Hence the brake fluid which is staying in the pipes is forced backwards and sent to the master cylinder through the test valve.

In the master cylinder when the piston moving in backward direction, the brake fluid is initially sent to the reservoir through bypass port. At the same time through the feed holes in the piston the brake fluid is moved to the front side of the piston. Hence the required fluid for the next piston operation is made available at the front side of piston.

Tandem master cylinder

In normal master cylinders only one outlet is generally provided. Moreover, from the location point of view, the master cylinder is located very near to the front wheels and the rear wheels are far away from the master cylinders. Hence, while braking the time taken by the brake fluid to travel from the master cylinder to reach the rear wheel cylinder becomes long. Hence the applied braking force is varied for both the front and rear wheels. Hence, Tandem master cylinder was designed to overcome the above said problem. The photographic view of the tandem master cylinder can be seen in Figure.

In this cylinder there are separate outlets available for front and rear wheels. The brake fluid is passed to the wheel cylinders through separate pipelines and the braking action is performed. In this type of master cylinders, initially the brake fluid is sent to the rear wheels and then to the front wheels. By that way equal amount of braking force is applied at a time for both the wheels. Hence the chance for the faulty operation or faulty situation during braking is eliminated. In the modern vehicles mostly tandem type master cylinder is used. The construction and working principle of the Tandem master cylinder can be seen in Figure.

While pressing brake pedal

Similar to the normal master cylinder, tandem master cylinder also has pistons, primary rubber cap, return

BAE_ENG_Chapter_06.indd 99 01/11/2022 11:50:56 AM

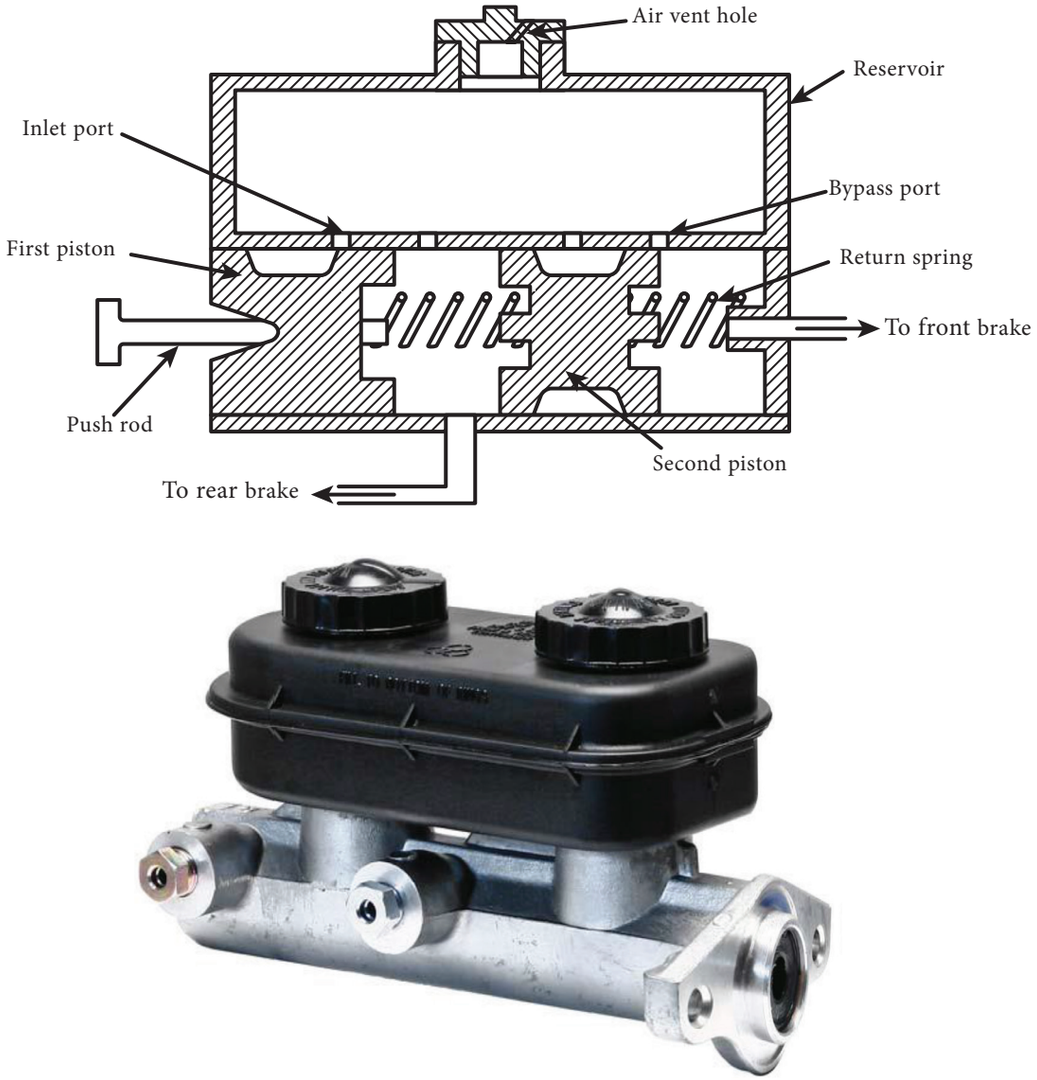

Figure 6.4.1.4 (a) Photographic view of the tandem master cylinder

spring with test valves - all are in two sets, therefore when the driver press the brake pedal, the piston inside the cylinder is moved by means of the push rod and hence the brake fluid is discharged initially to the rear wheels. In addition, while pressing the brake pedal the second piston is also finely moved and through another way the brake fluid is passed to the wheel cylinder of the front wheels and the brakes are activated. When the legs are removed from the brake pedal, the brake fluid pressure is reduced. Hence the brake fluid in the wheel cylinders is pushed backward by means of pistons and comes back to the master cylinders.

Through the pipelines the brake fluid reaches the inlet port and pushes the pistons out there. Hence the both brake shoes are expanded against tensile force caused by the return spring and mate with brake drum which create friction and tend to stop the wheels. Also by releasing brake pedal the fluid pressure is got reduced. Furthermore, by means of return spring the brake shoes are pulled and the pistons get back to its original positions.

BAE_ENG_Chapter_06.indd 100 01/11/2022 11:50:58 AM

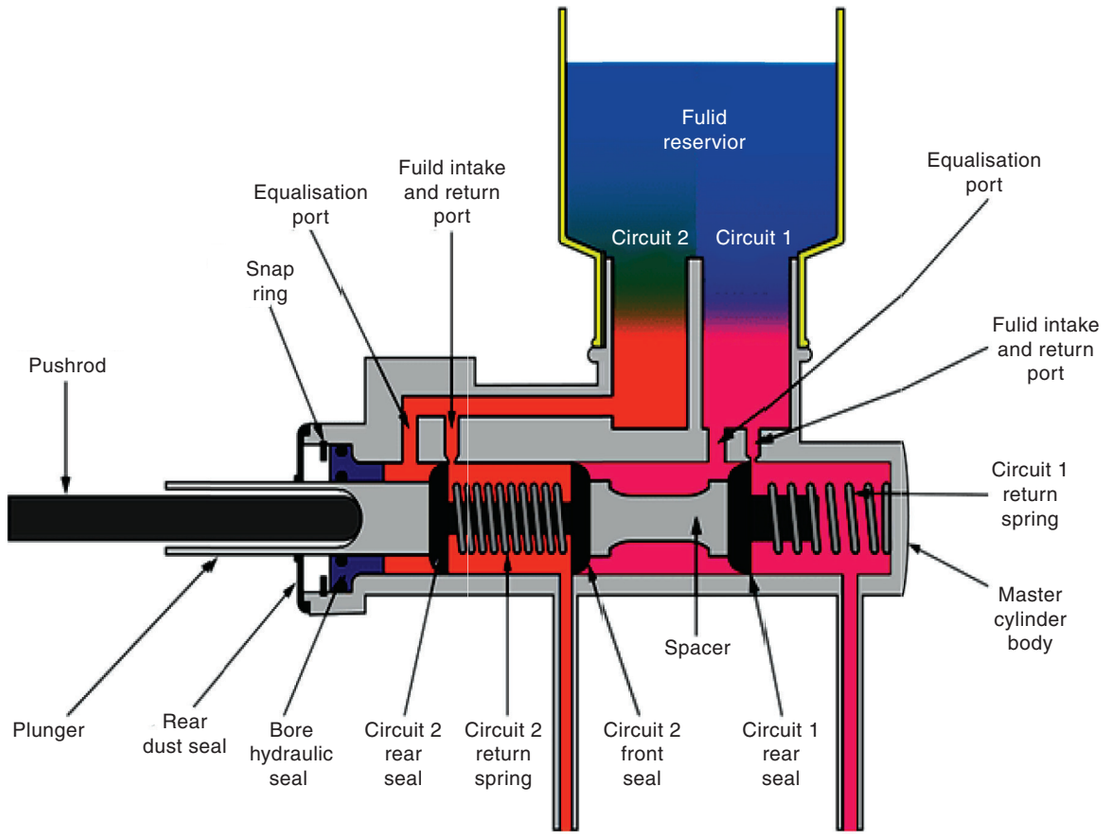

Figure 6.4.1.4 (b) Sectional view of the Tandem master cylinder

Wheel cylinder and its types

There are two types of wheel cylinders are used. They are

1. One piston type
2. Two piston type

Wheel cylinder

It is located on the brake carrier plate in between the two brake shoes. This

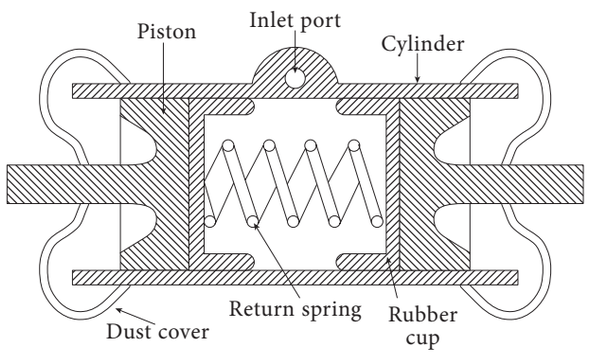



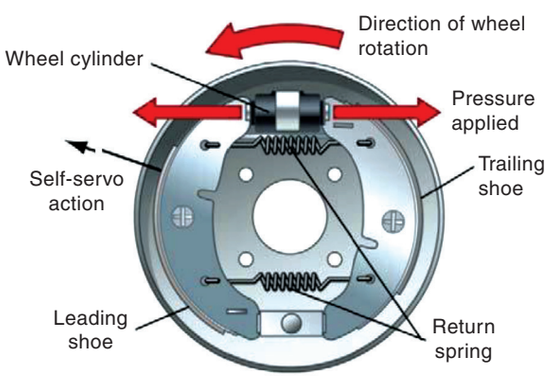

Figure 6.4.1.5 (a) Arrangement of the wheel cylinder

BAE_ENG_Chapter_06.indd 101 01/11/2022 11:50:59 AM

end part of the hydraulic brake system is called as slave cylinder. It is made up of cast iron. In wheel cylinder only the hydraulic pressure is converted in to mechanical work of brake shoes.

Construction

There are two movable pistons located inside the wheel cylinder. At the center position of these pistons inlet port is located. Nearer to this an bleeder screw is located. For avoiding oil leakages on the surroundings of the pistons, a rubber seal is fitted on it. For avoiding sticking of the pistons a return spring is fitted in between them. Moreover, to avoid entering of dust particles inside the cylinder a dust cover is fitted on both the sides.

Working principle

When the brake pedal is pressed by the driver, the brake fluid in the master cylinder is pressurized and enters in to the center of the wheel cylinders through the pipelines. This pressurized fluid pushes the pistons inside the cylinder in the opposite direction and hence the push rod which is connected to the pistons pushes brake shoes in the outward direction and allows the shoes to press the brake drum. By this way the brake is actuated and reduces the speed of wheels.

When the brake pedal is released, pressure in the wheel cylinder is reduced. Due to the action of the spring force both the pistons are moved towards the inward direction. Hence the brake fluid is returned back to the compression chamber of the master cylinder from the wheel cylinder through the same pipelines. The working principle of the hydraulic brake can be seen in Figure.

Bleeding system in hydraulic brake

In the hydraulic brake system if there is any air enters into any part of the braking system then the braking system will not functioning properly or totally. Thus the air must be removed. The process of removing the air present in the braking system is called as the bleeding system in hydraulic brakes. To release the air, the filler cap is opened

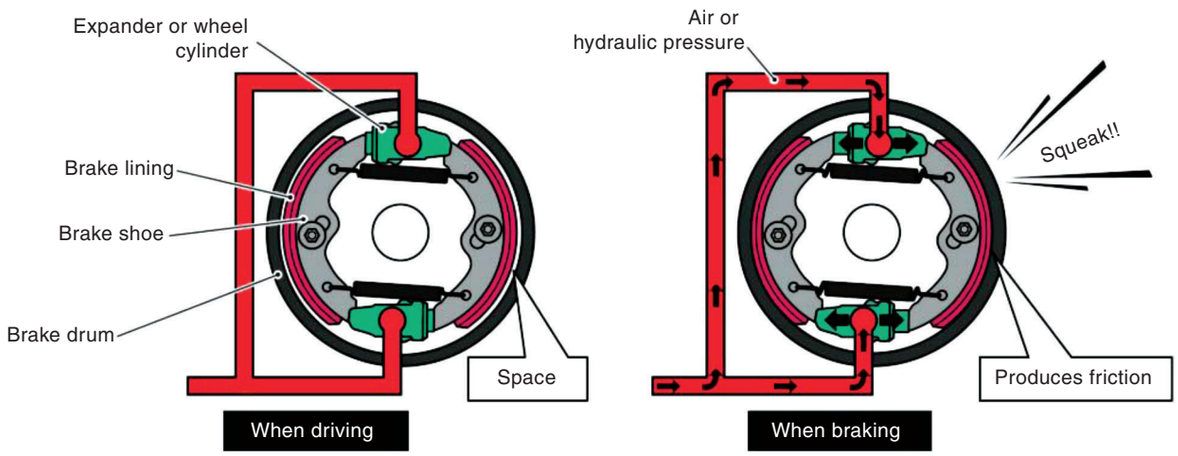

Figure 6.4.1.5 (b) Arrangement of the wheel cylinder

BAE_ENG_Chapter_06.indd 102 01/11/2022 11:50:59 AM

on the top of the master cylinder and a bottle (which contains the brake fluid) is kept at certain height as shown in Figure and connected it through the pipe lines with master cylinder.

The Bleeder valve in wheel cylinder must be connected with one end of the bleeder pipe and other end dipped in the brake fluid in the bottle which is filled by one third of brake fluid inside the container. Now by pressing the brake pedal randomly, the air bubbles presents inside the master cylinders and pipe lines are purged out by the brake fluid to the container placed in the floor through the bleeder valve and bleeder pipe.

After purging the air bubbles by repeatedly pressing the brake pedal, the pipe line which is connected to the bleeder valve has to be removed and the tube connected to the filler cap must be closed. The same procedure should be followed for all the four wheels. Initially the air bubbles must be purged from the wheels which are far away from the master cylinder. by the following air bleeding procedure for the wheels which are far away from the wheel cylinders. After removing the air bubbles from all the wheels the brake fluid must be poured into the reservoir and the tank must be filled.

6.4.2 Air Brake

Introduction

Generally the performance of hydraulic brake is based on the amount force applied on the brake pedal by the driver. Hence for obtaining high braking force the driver has to press the brake pedal at high force. This causes the driver more tiresome. To eliminate this difficulty and obtaining maximum braking force by less pressing, other brake systems such as air type, vacuum type and electric type brakes are used. The air brake is discussed in the following section. Absorbing the ambient air, compressing it to a very high pressure and operating the braking system is called as air brake which is used mostly in all vehicles. The construction of the normal air brake is shown in Figure. The brake cam 'S' placed on the brake carrier plate is actuated by the pressurized air obtained from the air compressor operated by the engine. Hence the brake shoes are

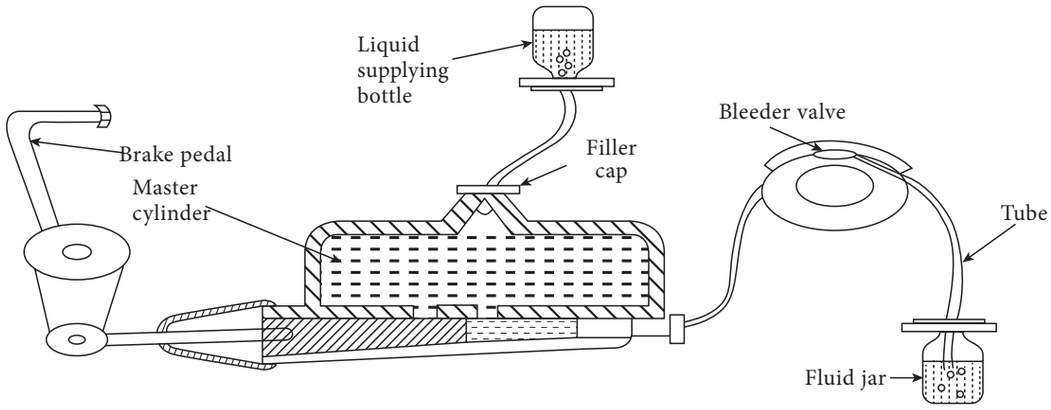

Figure 6.4.1.6 Bleeding system in hydraulic brake

BAE_ENG_Chapter_06.indd 103 01/11/2022 11:50:59 AM

DO YOU KNOW?

1. Brake System:

Modern braking components need exceptional wear resistance, heat resistance and of course exceptional stopping capabilities because, under extreme conditions, their operating temperatures can average over 350 Celsius and peak at up to 700° Celsius.In race use, 400 to 600° C is common on smaller cars. In touring cars and larger race cars temperatures shoot up to 800 - 900° C where the discs will glow red or orange.

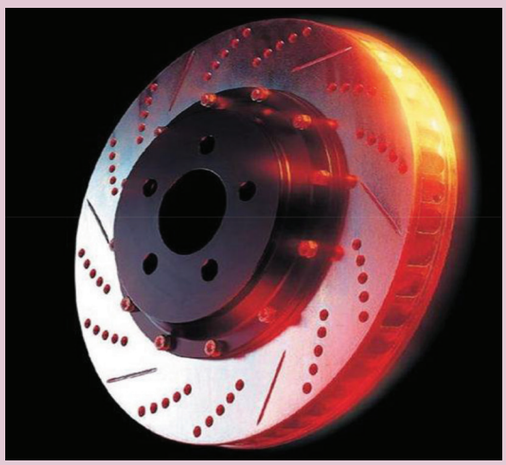

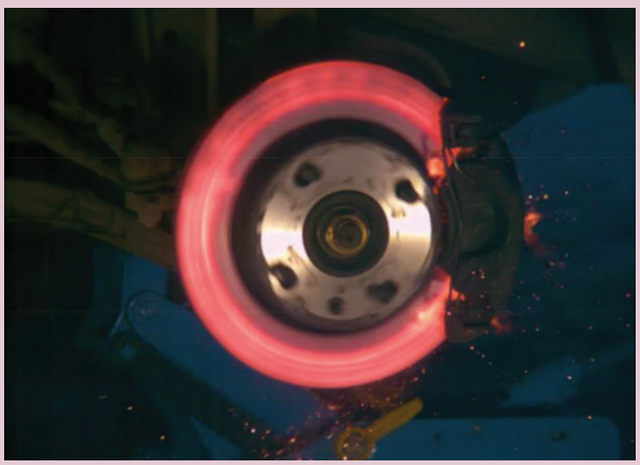

expanded and the wheels are stopped from rotation. Brake chambers are located nearer to each wheel of the vehicle.

Each chamber is connected to the reservoir tank through pipelines. When the brake pedal is pressed the brake valve is started to operate. Through the brake valve the pressurized air from the reservoir tank is sent to the brake chamber. In the brake chamber a slack adjuster is operated with help of diaphragm lever which is connected to it. By pressing the top end of the slack adjuster the bottom end turns the "S" cam and rotates the lever. Hence the brake shoes which are connected with the S cam get expanded and the brake drum is stopped from rotation.

While releasing brake pedal

While releasing the brake pedal, exhaust valve in the brake valve is opened. Hence the pressurized air in the brake chamber is forced through exhaust valve from the same way as the air enters to the chamber. At that time, the diaphragm inside the brake chamber is pushed in backward direction with the help of the spring force. At the same time slack adjuster and "S" cam are moved back to their original position. Thus brake shoes are pulled inward and released from the brake drum.

Parts of air brake

1. Air cleaner
2. Air compressor

BAE_ENG_Chapter_06.indd 104 01/11/2022 11:51:00 AM

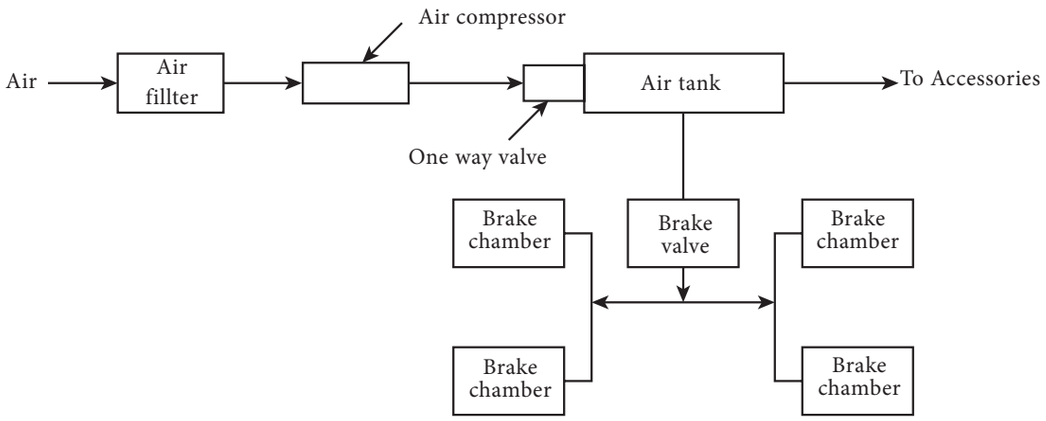

Figure 6.4.2 (a) Air Brake

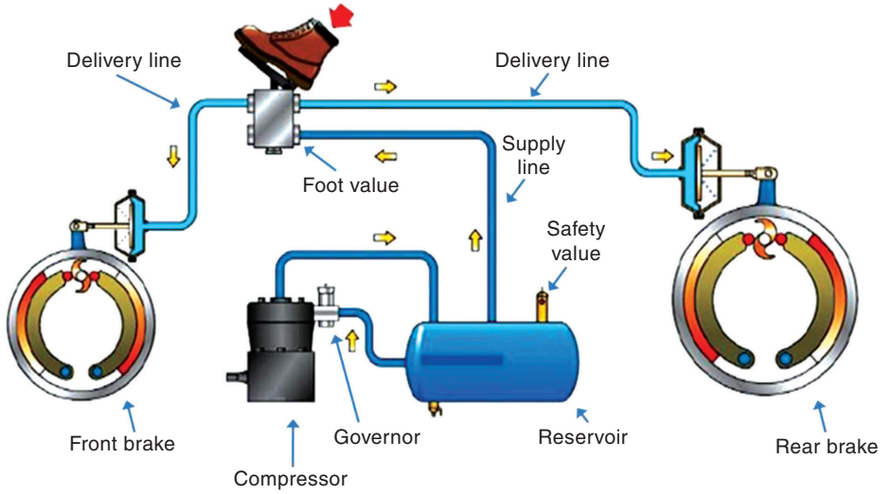

Figure 6.4.2 (b) Working Principle of an Air brake system

3. Unloader valve
4. Air tank
5. Pressure gauge
6. Relief valve
7. Brake valve and brake pedal
8. Brake light switch
9. Brake chamber and
10. Slack adjuster

Air compressor

The device used to produce compressed air which is required for operating the air brake is the air compressor. It is a reciprocating type air compressor. It works on the principle that when the piston moves downwards inside the cylinder, the suction port is opened and through this way the atmospheric air enteres in to the cylinder. When the piston moves upward, exhaust valve is opened and through the exhaust port the compressed air is sent to the reservoir tank.

Governor or unloader valve

This valve controls the compressed air being stored in excess pressure in the air storage tank. Normally the air pressure should be maintained at 7.5 kg/cm^2 in the reservoir tank. When the pressure exceeds above this limit, the unloader valve opens automatically and releases the

BAE_ENG_Chapter_06.indd 105 01/11/2022 11:51:00 AM

compressed air to the atmosphere. When the pressure of the air in the reservoir reaches to 6.5 kg/cm^2, the governor valve automatically closes.

Reservoir tank

Reservoir tank is used for storing amount of air required for operating the brake system. It is made up of steel plate. There are provision given for air inlet and draining the impurities from the tank. In addition to these arrangement a safety valve is also located at the top of the tank for maintaining the air pressure.

Brake valve

This valve is fitted below the brake pedal. When the driver presses the brake pedal, the piston in the brake valve is moved downward. It connects the compressed air with the brake chambers. Therefore the compressed air is sent to the brake chamber located at the four wheels.

Brake chamber

Near to the each wheels, one brake chamber is located and connected with the wheels. The brake chamber is made up of steel plate. The brake chambers are separated by the diaphragm made up of rubber. One chamber is connected to the pressurized air coming from the brake valve and the another chamber is attached to the brake cam that operates the brake through the diaphragm. The diaphragm element is compressed by a spring and the spring is located in the brake chamber. While pressing the brake pedal, the compressed air against the spring force moves the diaphragm and tends to expand the brake shoes.

Slack adjuster

The slack adjuster is attached at the end of the diaphragm lever coming out from the brake chamber. The bottom edge of the slake adjuster is attached to the S cam which is used to operate the brake system. Therefore due to the compressed air diaphragm is moved forward and allowed to rotate the S cam that expands the brake shoes which actuate the brake.

Advantages of air brake system

1. As compared to mechanical and hydraulic brakes it has more power and efficiency. Hence it is mostly used in heavy vehicles.
2. The parts of the brake system can be fitted to anywhere in the vehicle. So the chassis structure becomes simpler.
3. Compressed air in the reservoir tank can be also used to operate air horn, screen wiper and to fill air for tyres.
4. The driver does not feel tiresome by operating the air brake because of its simpler actuation.
5. It has low maintenance cost.
6. The air brake system is widely used in heavy vehicle because it response is faster than any other systems and it works accurately.

6.4.3 Servo brake

For stopping the heavy vehicles, higher amount of braking force is required. Hence for increasing the braking force the driver has to apply more force on the brake pedal. During long distance travels the driver becomes tired due to the above problem. To avoid this difficulty and help the drivers any one type of brake is chosen and the brake system

BAE_ENG_Chapter_06.indd 106 01/11/2022 11:51:00 AM

is coupled with the other brake system that enhances and converts the small power of the driver in to multiple times of the power for braking the vehicle. This type of brake system is called as the servo brake. Generally, by using less amount of force getting more amount of power is called as servo action. In this way, using additional power from the high pressure air or from vacuum the hydraulic brakes are operated. This type of brake is called as servo brake or energized brake.

Air servo brake or air assisted hydraulic brake

In this type of brakes for increasing the force on a piston of the master cylinder, compressed air is used. In this type of braking system half of the pressure applied to the pedal from the simple hydraulic braking is sufficient to operate the system. Moreover, even in case of any leakage in the compressed air path, the brakes can be applied by the servo braking system. The schematic of this brake is shown in Figure 6.4.3.1.

For operating the brake system there are two air compressors and control valves used in this system. Apart from these, connecting pipes are present to connect the servo unit with the master cylinder to combine the air pressure with hydro power. When driver presses the brake pedal, the piston lever inside the servo unit is moved forward. At that time the inlet valve in the master cylinder is opened and the compressed air is allowed to enter into the cylinder for increasing the pressure. Hence the brake fluid is sent out with high pressure to the wheel cylinder and operates the brakes. When the driver releases the brake pedal, the outlet valve is opened and the compressed air is sent out through this valve. Hence the brake shoes are released from the brake drum and the drum is allowed to rotate which rotates the wheels.

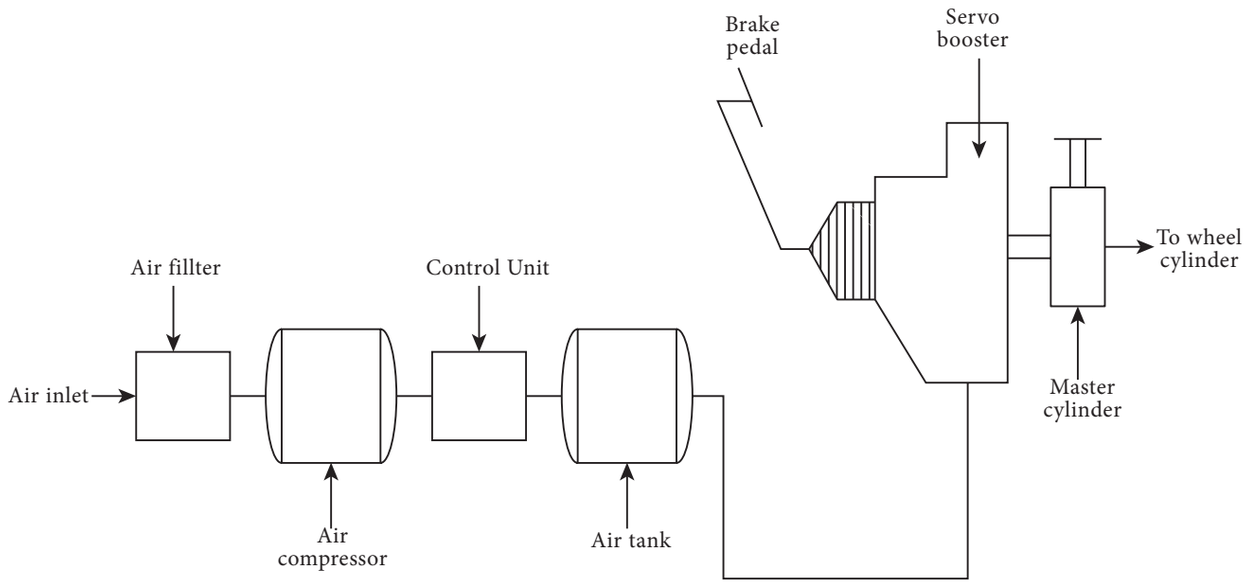

Figure 6.4.3.1 Air servo brake or air assisted hydraulic brake

BAE_ENG_Chapter_06.indd 107 01/11/2022 11:51:00 AM

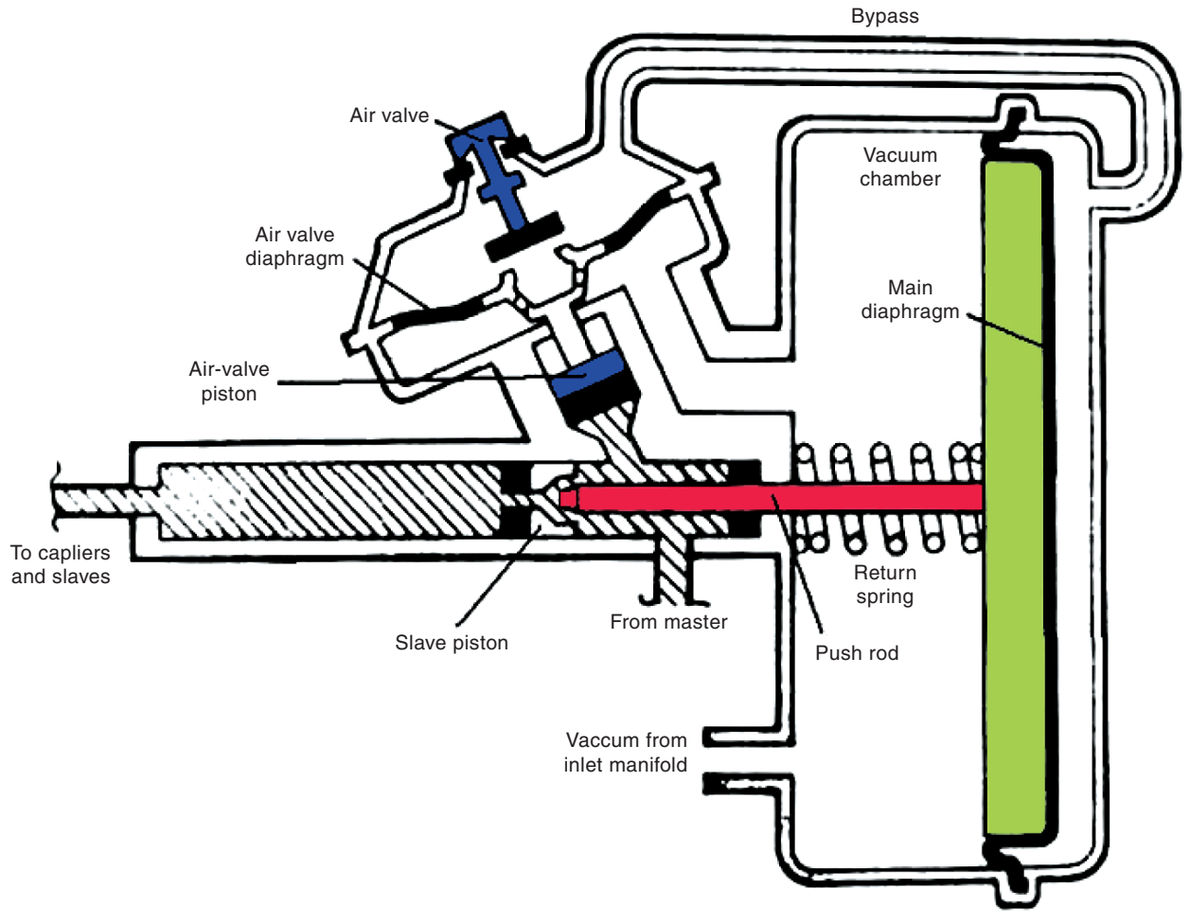

Figure 6.4.3.1 (a) Schematic of the Air assisted servo Brake system

Vacuum servo brake

The schematic view of the vacuum servo brake is shown in the figure. This type of brake system utilizes the vacuum created at the inlet manifold of engine and increases the braking force. The vacuum reservoir is connected to the inlet manifold of the engine with a non-return valve. Moreover, vacuum reservoir is connected on both sides of pistons inside the servo cylinder. In this way the vacuum reservoir is attached to the right side of the piston in the Servo cylinder and the left side is attached with the control unit and the schematic of vacuum assisted servo brake can be seen in Figure 6.4.3.2.

There is a piston in the control unit that has two valves attached to it. These valves are arranged in a compressed state with the help of two springs. The valve at the top of the control unit controls the atmospheric pressure controls the connections in the left side of the piston in the servo cylinder. Similarly, valve at bottom of the control unit controls the connections between the vacuum reservoir which is located in the right side of the control unit and servo cylinder. The piston inside the control unit is actuated by master cylinder. In the control unit valve at the top is in closed position and bottom will be in opened position when there is no any force applied to the brake pedal. Thus, the two sides of the piston inside servo cylinder are equally contacted with the vacuum in the inlet manifold.

BAE_ENG_Chapter_06.indd 108 01/11/2022 11:51:01 AM

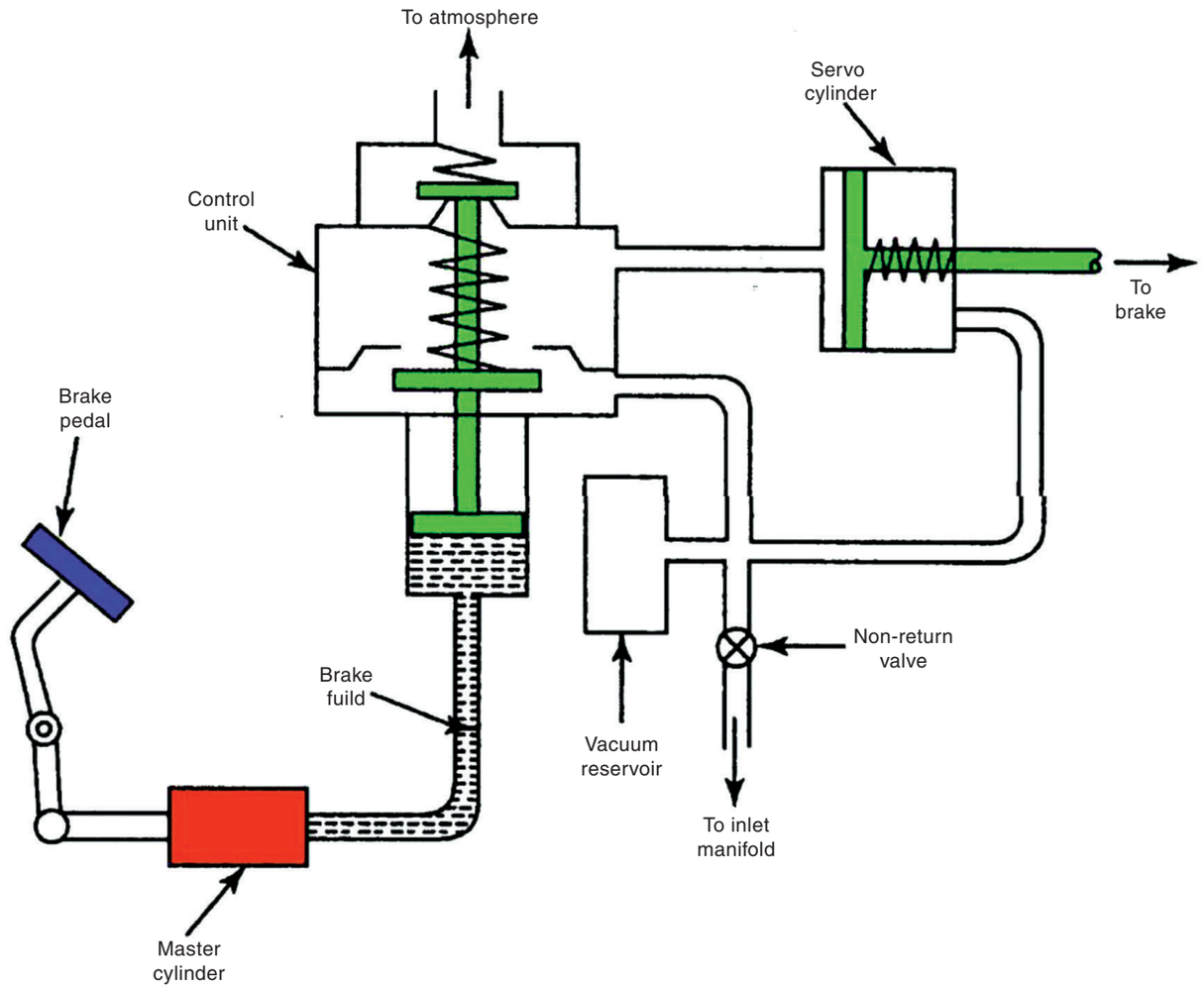

Figure 6.4.3.2 (b) Schematic of the Vacuum assisted servo Brake system

When pressing the brake pedal the pressure developed on the brake fluid inside the master cylinder pushes the piston inside the control unit in upward direction. Hence the valve in the bottom of the control unit gets closed and valve at the top get opened. Therefore right side of the piston inside the servo cylinder contacted with atmospheric air. Hence the vacuum force completely spread over the right side of the piston in the servo cylinder and moves the piston lever in the same direction. This transfer in place of piston actuates the braking system with the path of connections. By this way the braking force got reducing while the driver presses the brake pedal.

6.4.4 Engine exhaust brake

It is used as an assistant brake in heavy vehicles such as TATA .While traveling down continuously, in heavy traffic roads and when travelling for a long distance safely and slowly by applying the brake this type of brake is helpful. This type of brake is more suitable for the vehicles travelling at less than 40 km speed. However, this type of brake system is not applicable for stopping the vehicle

BAE_ENG_Chapter_06.indd 109 01/11/2022 11:51:01 AM

suddenly as the other brake systems which is the disadvantage of this brake system.

6.5 Disc type brake

In modern vehicles the disc type brake is widely used apart from drum type brake system. In this type of brake system a circular brake disc as shown in Figure 6.5 is used instead of brake drum. Moreover instead of brake shoe flat friction grip is used in this system.

The disc brake system is shown in Figure 6.12. When the brake pedal is pressed by the driver, the simple hydraulic pressure actuates the compressed brake fluid and moves the two pistons towards the caliper assembly. Hence the friction pad next to the pistons is moved inward and presses the revolving disc located in between them. Therefore, the wheel hub and wheel which is connected to the disc is stopped from rotation. When the driver releases the brake pedal, the pressure on the pistons inside the caliper assembly is reduced. Hence the piston moves back and the friction pad is released from the disc and releases the brake on the brake disc. Similar to the drum brake, there is a bleeder screw provided in the caliper assembly in a disc brake.

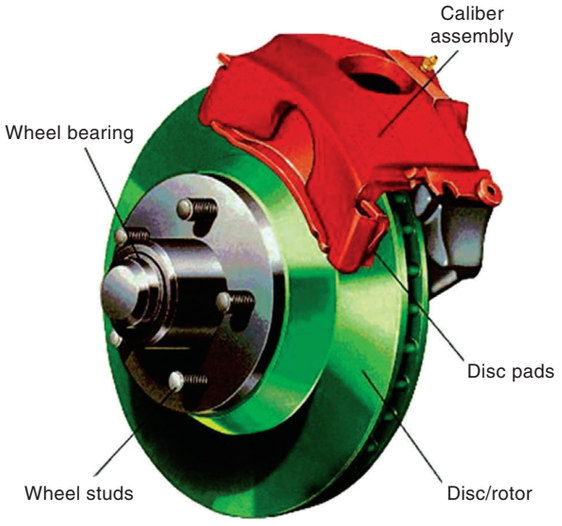

Figure 6.5 View of the Disc Brake system

Advantages in disc brake

1. Lower weight in construction than other brakes.
2. Brake force is very high.

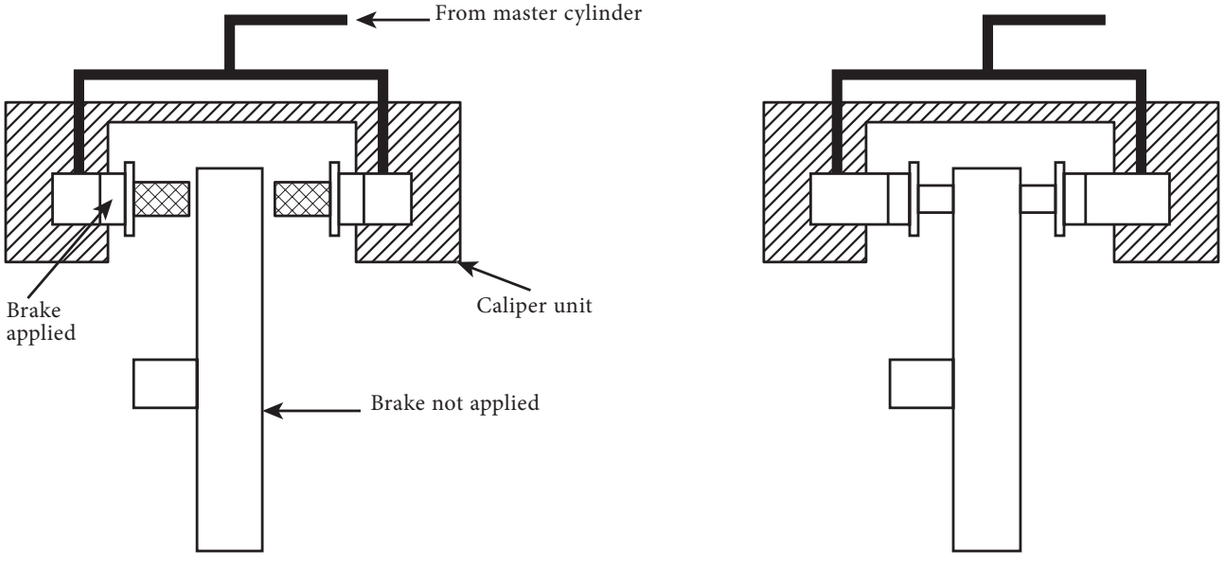

Figure 6.5 Disc type Brake

BAE_ENG_Chapter_06.indd 110 01/11/2022 11:51:01 AM

3. It is sufficient to give low pressure on a brake pedal by the driver.
4. Has less components and hence it can be easily assembled and dismantled.
5. The brake efficiency is not affected even if the vehicle goes in the water.
6. Testing and maintenance are simple.
7. As the disc is exposed to the ventilated air the heat can be immediately transfer to the atmosphere.

Disadvantages

1. As compared to normal brake shoes and linings the wear occurring in the brake pad of the disc brake is very quick.
2. It is essential to use servo unit because of more amount of hydraulic force is required to stop the vehicle.
3. If the disc brake is fitted to the rear wheels, then hand brake system is essential as the additional requirement.
4. This system cannot be efficient for heavy vehicle applications.

6.6 Anti-lock brake system

Generally the purpose of the brake is to reduce the speed of the vehicles within a particular distance. The brake system which is presently used in automobiles

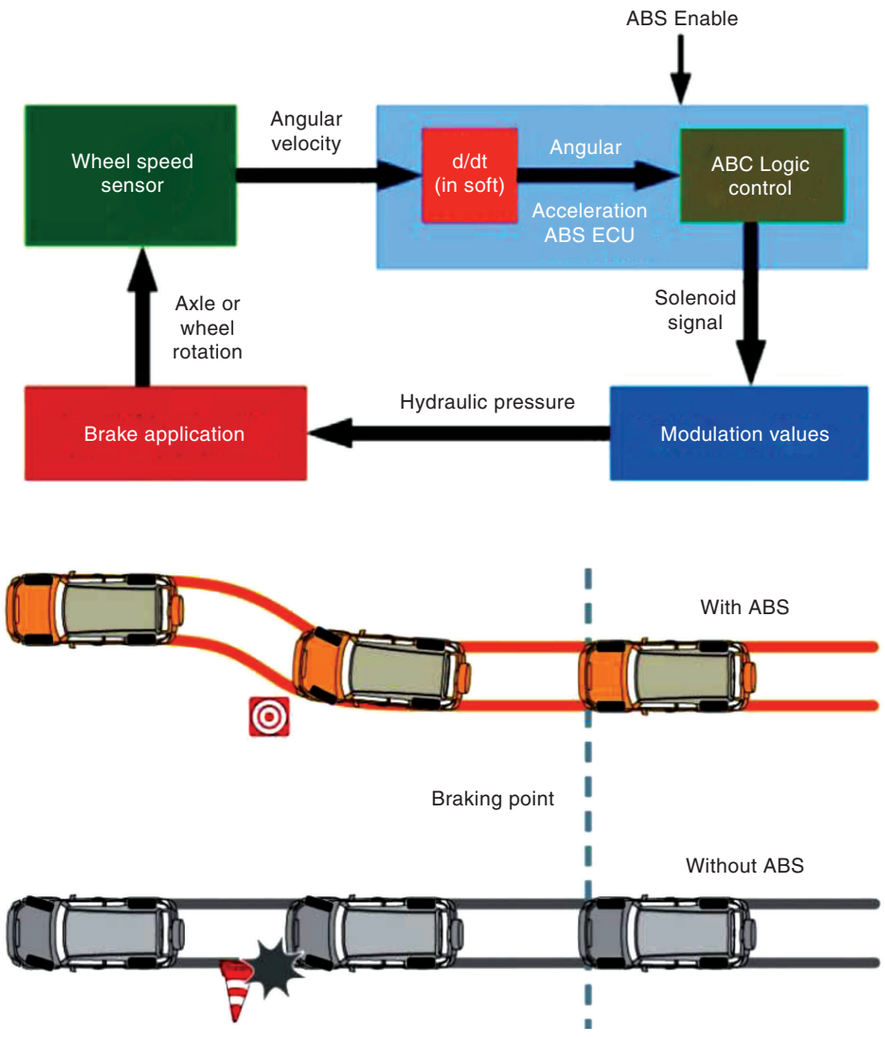

Figure 6.6 Effect of ABS on the Vehicle

BAE_ENG_Chapter_06.indd 111 01/11/2022 11:51:01 AM

DO YOU KNOW?

F1 Racing Car Disc Brake Pads for a Formula 1 car cost $250 a piece, and during the course of racing and testing, a team will use around 1000 of them each season. That makes for an annual bill of $250,000 for pads alone. Then there are the rotors, callipers, fluids and other components before you even start considering the things that make a car go rather than stop.





BAE_ENG_Chapter_06.indd 112 01/11/2022 11:51:01 AM

provides the required braking force for controlling the speed of vehicle. However, suddenly or unexpectedly when the vehicle is stopped, the vehicle is pulled away from its normal braking due to the road condition, condition of the tread and vehicle load etc. This situation leads to accidents.

To avoid this situation, before the vehicle is started to pull along one side, the antilock braking system provides braking force to stop the wheel by giving and releasing the force intermittently. It is a kind of special type of braking system called as ABS system. In this system a hydraulic control unit and an electronic control unit are considered as important components. ECU receives the signals based on the various programming situations from the wheels (input signals) under various conditions and converts them into input control signals and then sends to the hydraulic control unit.

Hence the system opens the brake fluid valve intermittently and prevent the wheel to lock completely. The block diagram of the ABS can be seen in Figure 6.6 and the effect of ABS on the vehicle during braking can be seen in Figure.

Advantages of A.B.S system

1. It prevents the vehicle pulling from one side during braking.
2. Reduces the stopping distance of the vehicle wheels.
3. Brake lining and the parts of the brake which withstand the vibration could work for long time
4. It is possible to drive and steer the vehicle under control even during risky suituations.

6.7 Hand brake

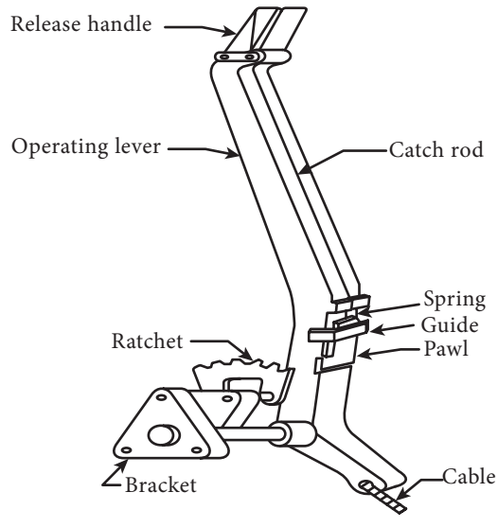

Figure 6.7 Hand Brake

During normal operating conditions, for stopping the vehicle foot brake is commonly used. However, during emergency or dangerous situations when the foot operated brake loses its ability to operate correctly, then hand brake is used to stop the vehicle. Moreover when the vehicle is climbing down on lower roads and when the vehicle is under unbalanced condition of the load, the hand brake is used to avoid movement of vehicle automatically. As the hand brake is use to stop the vehicle and bring it to its balanced condition it is also called as parking brake.

Hand brake is totally separated from the foot brake system. Mostly mechanical type brake is used in the hand brake system. The hand brake is connected with the rear wheels which receive the final drive. The hand operated brake lever is placed on the right side of the driver's seat.

Working principle

Hand brake works based on the ratchet and pawl mechanism. When the

BAE_ENG_Chapter_06.indd 113 01/11/2022 11:51:02 AM

ratchet release lever is pressed at the top of the hand brake, the pawl is moved up and releases the ratchet. However while pulling the lever in upward direction, cable is also pulled towards the upward direction. The cable actuates the mechanical brake which is connected to it and stops the rear wheel by applying force. Moreover ratchet release lever releases and moves the pawl towards downward direction with a help of spring and again connects the ratchet. By this way hand brake is operated to stop the vehicle.

6.8 Common parts of braking system

The common parts of brake system are listed below

1. Brake drum
2. Brake shoes
3. Brake linings

6.8.1 Brake drum

Brake drums are commonly opened in the inner side and closed on the outer side. The brake shoes present inside the brake drum are expanded and operate the brake. Due to the friction created while operating the brake system the brake drum is heated up and the temperature of the drum is increased. To reduce this temperature, fins are located at outside the brake drum. The brake drum should not wear due to friction caused inside while rotating and it must have high thermal conductivity to dissipate heat quickly. Moreover it must be of less weight and it must have enough strength. Brake drums are mostly made up of cast iron or nickel chromium steel alloy or Aluminium alloy materials.

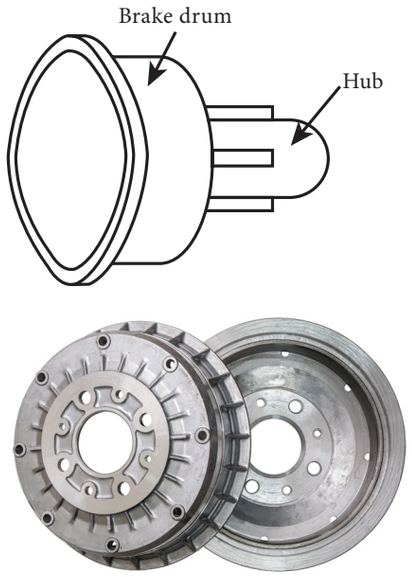

Figure 6.8.1 Brake drum

6.8.2 Brake shoes

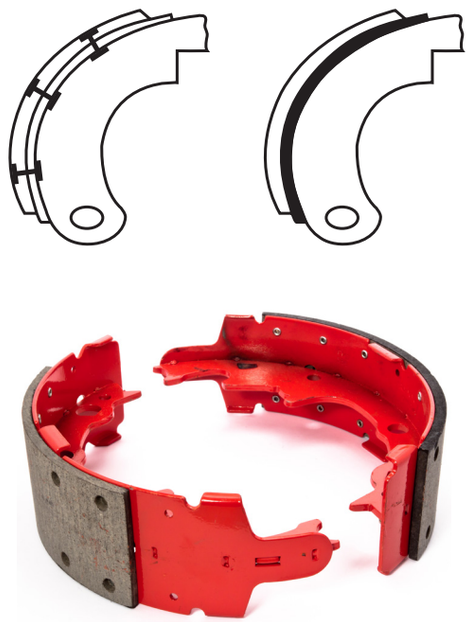

Figure 6.8.2 Brake shoes

In each brake carrier plate two brake shoes are provided. The brake shoes looks like in “T” shaped cross section. The right hand side of the brake shoe is called as the primary brake shoe and the shoe in the left hand side is is called as the secondary brake shoe. The bottom edges of the two brake shoes are connected

BAE_ENG_Chapter_06.indd 114 01/11/2022 11:51:02 AM

with carrier plate through anchor pins. In between the top edges of the brake shoe, brake cam or wheel cylinder is located.

Both the brake shoes are in the pulling position with help of the retracting spring. Brake liners are fixed on the outer face of the brake shoes by riveting or by using the lining cement. The edge of brake shoe which presses the brake drum first is called as the leading shoe and the edge which presses the brake drum later is called as the trailing shoe. Brake shoes are often made up of cast iron or steel.

6.8.3 Brake linings

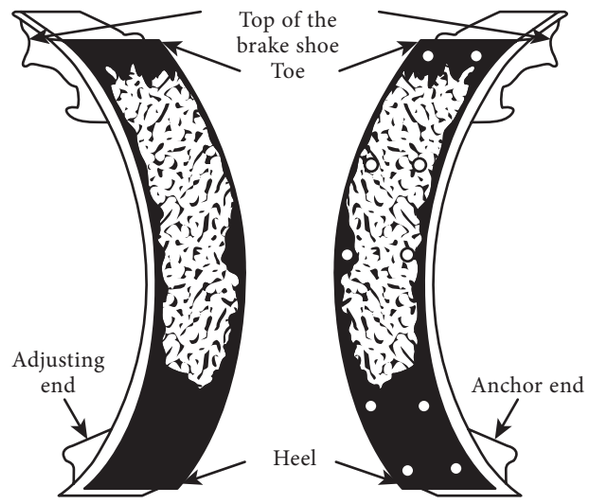

Figure 6.8.3 (a) Brake linings

Brake linings are placed on the outer face of the brake shoes. While pressing the brake pedal the brake linings are only in contact with the brake drum and reduces the speed of wheels. Therefore in brake linings the temperature reaches to about 350°C more and wear occurs. Hence the brake lining should be made to withstand very high temperature and wear resistant and should not change its shape. Brake linings are classified in to two types, they are

1. Solid woven type
2. Molded type.

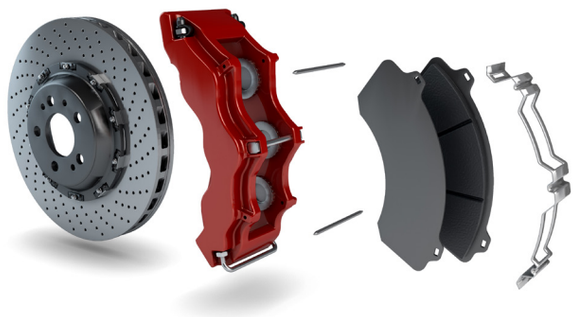

Figure 6.8.3 (b) Brake linings

1. Solid woven type brake liner

It is made up of a non-metallic twisted asbestos thread. The average compression coefficient of this liner is 0.4. This type of liner is easily tolerable 260°C up to 350°C. It is manufactured by asbestos threaded fibers which are combined with brass and zinc rods that could not be easily subjected to wear. These types of brake liners are used in cars and heavy vehicles. These brake liners are attached to the brake shoes using riveting method.

2. Moulded type brake liner

This type of brake liners are made of natural asbestos fibers with resin-like synthetic paste by using moulding technology. The average friction coefficient of this liner is 0.4. This liner could be operated at the temperature between 400°C to 450°C without any wear.

6.9 Brake adjustment

Brake linings and brake joints get worn out due to the continuous usage of

BAE_ENG_Chapter_06.indd 115 01/11/2022 11:51:03 AM

the brakes. Hence the efficiency of the brakes decreases or becomes inactive. Therefore, at the particular interval of time the brake system has to be checked and adjusted for correct action if necessary. The adjustments in the brake system can be done by the following two modes:

1. Minor adjustment
2. Major adjustment

6.9.1 Minor Adjustment

In this method, without removing the wheels, the adjustments are made in the brake shoes upto the extent till the wear occurs. Generally in the vehicles front wheel brake shoes wear faster than the brake shoes in the rear wheels. Hence the brake drum has to be removed from the wheels and checked. If there are no problems (as stated below) then a small adjustment is enough.

i) Wear occurred in brake drum or brake drum leaves the center position.
ii) Brake shoes are soaked in brake fluid
iii) The brake shoes get wearer and the top of the rivet is visible outside the brake shoes.

6.9.2 Major Adjustment

In this method all the brake drum and brake shoes must be checked by removing all the brake drums. If there is any wear found in the brake drum or if the brake drum is shifted from the center position, then it has to be corrected by using the brake drum lathe and used. If the wear of the brake drum is more, then the drum must be replaced by a new drum. If there is any wear occurred in brake shoes for about 1 mm or above that, then the brake shoe must be replaced by a new one. If it is a hydraulic braking system then the paths (through which the brake fluid is circulated) have to be cleaned. Used parts of the wheel cylinder and master cylinder must be replaced by new parts. Required amount of brake fluid must be refilled.

Anchor pin and brake shoes must be corrected according to the requirement. The movement of the brake pedal should also be checked and adjusted as per the requirement. For more detailed procedures on working methods, the manual supplied by the vehicle manufacturers must be referred.

6.10 Brake pedal free play

When the brake pedal is pressed, the parts of the brake will not respond to function. First, the brake pedal will move to a certain distance. This distance is named as brake pedal free play. After this movement, further pressing of the brake pedal starts the parts of the brakes to function and stops the wheel. The "motionless movement" of the brake pedal is generally less than 10 mm. Driving and stopping the vehicles with control can be possible only by understanding this "motionless movement".

6.11 Brake Efficiency

To stop the vehicle the maximum braking force or retarding force (F) is applied on the wheel. This braking force depends on the μ- called as the co efficient of friction between the tyre tread and the road and the total load (W) acting on the vehicle. That is

BAE_ENG_Chapter_06.indd 116 01/11/2022 11:51:03 AM

$$F = \mu \times W$$

According to the above, the brake efficiency is 100%. However, in practice, 100% of the brake efficiency is considered as not safe and 50% is allowed in the foot operated brake and 30% brake efficiency for hand brakes.

6.12 Stopping distance

Brakes after applying will not stop the vehicles immediately. the vehicle moves certain distance and then only it stops. Normally if the vehicle is running at 30 km/hour the vehicle will stop after 4.5 m when the brake is actuated. This distance is calculated with an approximation. The vehicles stopping distance is varied according to the speed of the vehicle, surface of the road and the type of tread in the tire.

However, in case of emergencies and risky situations, the following factors should be taken into consideration. They are,

i. Time to think for pressing the brake pedal by the driver.
ii. Time taken for pressing brake pedal by the driver.
iii. The time taken for stopping the vehicle after the driver pressed the brake pedal.

6.13 Brake testing

Different methods are used to calculate the brake efficiency. The stop watch test is a simple method among the testing methods.

6.13.1 Stop watch test

For conducting this test the vehicle has to be operated at the speed of 40 km/hr to 50 km/hr. Any symbols in the road can be kept as a mark point. Once if the vehicle is reached that symbol, then the brake pedal has to be pressed and the time has to be noted using the stop watch. The time taken for the vehicle from the mark point and the stopping point of the vehicle should be noted. Distance from the symbol to vehicle get stoped should be noted. From this method we can identify the stopping distance.

6.14 Problems in brake systems, their causes and remedies

Problem 1: Brakes not functioning

S.No	Reasons	Fixing methods
1	If brake shoes were broken or worn out.	Have to be replaced.
2	Poor quality brake shoes	Have to fix good quality brake shoes
3	Oil leakages in the brake shoes	Stop the leakage
4	If the fluid pressure is lower in the hydraulic brake system	Check the fluid leak (or) need to remove the air bubbles.
5	Brake actuating Cable (or) connections become loose	Have to be checked or removed
6	If the brake drum is unevenly worn out.	Has to be corrected for the wear.

BAE_ENG_Chapter_06.indd 117 01/11/2022 11:51:03 AM

Problem 2: Lower braking efficiency

S.No.	Reasons	Fixing methods
1	Oil leakages from the brake drum and brake shoes	Have to change the brake shoes. Moreover the oil leakage must be stopped.
2	Connections and adjustments are away	Have to be corrected Based on the manufactures advice
3	Master cylinder damage in the hydraulic brake system	Testing should be done to repair the fault
4	Air bubbles present in the hydraulic brake system	Air bubbles have to be removed by using brake bleeding method. Required quantity of brake oil has to be filled.
5	The cam used to move the brake is damaged	New cam should be fixed

Problem 3: Brake binding

S.No.	Reasons	Fixing methods
1	If the return spring in the brake shoes or brake pedal losses its stiffness or have broken	New springs should be affixed.
2	Lack of lubrication in attachments	Exactly, the attachments should be properly lubricated
3	The size of the brake pedal free play in the brake pedal is not correct	Re-correct it
4	Any problems in wheel cylinder	Have to repair by checking or need to replace new one.
5	Bypass port in the master cylinder may get blocked	Need to clean the blockages using compressed air.

Problem 4: Noise is occurred when the is brake is operating

S.No.	Reasons	Fixing methods
1	If there is loose in Wheel bearing	Need to remove the loose connections and fix it.
2	If the brake drum and brake shoes were released from its center.	Two parts should be corrected and fixed in the same center.
3	If the wheel hub in a brake drum may be loose.	Need to accelerate the brake drum well
4	There may be a chance of occurring vibration in the brake shoes if the return springs in the brake shoes are losses.	Have to change the return spring
5	Brake shoes may be loosen in a brake disc	Change the brake shoes and fix it proper.

BAE_ENG_Chapter_06.indd 118 01/11/2022 11:51:03 AM

Student Activity

1. According to the curriculum, the students will be informed to go near by the two wheelers service station for understanding the movement, parts and repairing methods of drum type brake and need to submit a report to the organization.
2. Go to the nearest four-wheel drive workshop to know the parts, movement and maintenance of the air brake and servo brake and have to submit a report.
3. Go to the nearest small four-wheel drive workshop and take a look at the parts of hydraulic brake system and methods to removal of air from hydraulic brake system and submit the report.

Glossary

1	Brake	–	தடை
2.	Brake pedal	–	தடை மிதி
3.	Brake shoe	–	தடைக் கட்டை
4.	Brake lining	–	தடைப் பட்டை
5.	Brake drum	–	தடை உருளை
6.	Drum type brake	–	உருளை வகை தடை
7.	Disc type brake	–	தட்டு வகை தடை
8.	Power brake	–	ஆற்றல் தடை
9.	Hydraulic brake	–	திரவ தடை
10.	Air brake	–	காற்று தடை
11.	Vacuum brake	–	வெற்றிட தடை
12.	Electric brake	–	மின்சார தடை
13.	Brake cam	–	தடை கேம்
14.	Brake band	–	தடைக் கட்டு
15.	Lever	–	சுண்டி
16.	Master cylinder	–	பிரதான சிலிண்டர்
17.	Brake carrier plate	–	தடை தாங்கித் தட்டு
18.	Wheel cylinder	–	சக்கர சிலிண்டர்
19.	Brake oil	–	தடை எண்ணெய்
20.	Return spring	–	திருப்புச் சுருள்
21.	Braking force	–	தடை விசை
22.	Mechanical advantage	–	இயந்திர லாபம்
23.	Inlet port	–	உள்ளிழுக்கும் துவாரம்
24.	Bypass port	–	புற வழித் துவாரம்
25.	Check valve	–	சோதனை
26.	One way valve	–	திருப்பு வால்வு

BAE_ENG_Chapter_06.indd 119 01/11/2022 11:51:04 AM

References

1. S.K. Gupta, A Text Book of Automobile Engineering, S. Chand and Company, New Delhi, ISBN 978-93-837-4691-0, First Edition 2014, Reprint 2016.
2. Automobile Engineering, 2nd Edition, Sci Tech Publications (India) Pvt Ltd, 2011. Ramalingam. K.K.
3. Kirpal Singh, Automobile Engineering, Vol 1, Standard Publisher and distributor, ISBN – 13 – 978-8180141966
4. Jack Erjavec- Automotive Technology_ A Systems Approach -Delmar Cengage Learning (2009) ISBN-13: 978-1428311497
5. James D. Halderman, Automotive Technology, Principles, Diagnosis and service, fourth Edition, 2012, Prentice Hall, ISBN - 3: 978-0-13-254261-6
6. K.K.Jain and R.B.Asthana, Automobile Engineering, Tata McGraw-Hill Publishing Company Limited, New Delhi
7. R.K.Rajput, A Text Book of Automobile Engineering, Laxmi Publications, New Delhi.
8. A.K. Babu & Er. Ajit Pal Singh, Automobile Engineering, S.Chand Publishing, New Delhi
9. Internal Combustion Engines by V. Ganesan, Tata McGraw-Hill Education, 2004
10. Automotive Mechanics by William Crouse, Donald Anglin

Webliography

1. https://www.howacarworks.com/basics/how-the-braking-system-works
2. https://www.carparts.com/brakes.htm
3. https://me-mechanicalengineering.com/anti-lock-braking-system-abs-advantages-and-disadvantages/
4. https://shop.advanceautoparts.com/r/advice/car-maintenance/brakes-basics-the-components-in-the-braking-system
5. http://www.mechanicalbooster.com/2018/06/types-of-braking-system.html
6. http://aermech.com/anti-lock-braking-system-abs-working/
7. https://www.holtsauto.com/holts/news/problem-solved-troubleshooting-brake-problems/
8. https://www.autoanything.com/brakes/drums-vs-disc-brakes

BAE_ENG_Chapter_06.indd 120 01/11/2022 11:51:04 AM

Evaluation

642GX

PART - A

One mark questions
Choose the correct answer

1. What kind of energy is converted and how in the brake system.
   a) Kinetic energy into static energy
   b) Kinetic energy into electrical energy
   c) Thermal energy in to kinetic energy
   d) Frictional energy and heat energy

2. The frictional force between which two parts in the brake system is used to stop the vehicle?
   a) In between the brake drum and wheel cylinder
   b) In between the brake drum and brake shoes
   c) In between the brake drum and wheel hub
   d) In between the brake drum and brake disc

3. In which part the friction plate is connected in the disc type brake system?
   a) Piston
   b) Caliper
   c) Wheel hub
   d) Axle casing

4. The actual percentage of braking efficiency of a new vehicle should be
   a) 40%
   b) 60%
   c) 80%
   d) 100%

5. What type of brake is mostly used in cars?
   a) Mechanical brake
   b) Hydraulic brake
   c) Air brake
   d) Vacuum brake

6. Which part in the wheel cylinder is used to stop the leakage of brake fluid?
   a) Piston
   b) Spring
   c) Dust cover
   d) Cup

7. Hand brake is driven by which wheels?
   a) Rear wheels
   b) Front wheels
   c) Left side wheels
   d) Right side wheels

8. Brake linings are generally made up of which material?
   a) Asbestos
   b) Copper
   c) Cast iron
   d) Aluminum alloy

9. What is the name of the procedure for the removing of air from the hydraulic brake system?
   a) Cleaning
   b) Removing
   c) Bleeding
   d) Replacing oil

BAE_ENG_Chapter_06.indd 121 01/11/2022 11:51:04 AM

10. Brake linings are affixed to which part?
    a) Brake shoes
    b) Brake drum
    c) Wheel cylinder
    d) Master cylinder

Part - B

Three mark questions

1. What is the need of brake system?
2. What are the advantages of disc type brakes?
3. What are the general types of brakes?
4. What are the properties should be there in brake fluid?
5. What are the additives mixed in the brake fluid?
6. How the brake shoes are connected to the brake linings?
7. What is meant by servo brake? And its type?
8. What are the advantages of antilock brake system?

Part - C

Five mark questions

1. Describe the procedure of removing air bubbles in the hydraulic braking system.
2. Draw and name the parts of wheel cylinder.
3. Describe the construction of brake shoe with neat diagram.
4. Describe the manufacturing procedure of brake linings and the procedure for connecting brake lining to the brake shoes.
5. Distinguish between drum type brake and disc type brake.
6. Describe the disc type brake with neat diagram.

Part - D

Ten mark questions

1. Draw the Line Diagram of air brake and describe it.
2. Explain the master cylinder in a hydraulic brake system with neat diagram.
3. Draw and explain the vacuum type servo brake system.
4. Draw and explain about the tandem master cylinder.

BAE_ENG_Chapter_06.indd 122 01/11/2022 11:51:04 AM

UNIT 7

Suspension System

Contents

7.0 Introduction
- 7.0.1 Functions of Suspension System
- 7.0.2. Properties of Suspension system

7.1 Springs
- 7.1.1 Steel Spring Types
- 7.1.2 Rubber Spring Types
- 7.1.3 Air Spring

7.2 Helper Spring

7.3 Types of Suspension System
- 7.3.1 Conventional Suspension System
- 7.3.2 Independent Suspension System
  - 7.3.2.1 Wish Bone Type
  - 7.3.2.2 Vertical Guide Type
  - 7.3.2.3 Trailing Link Type
  - 7.3.2.4 MacPherson Strut Type
  - 7.3.2.5 Swing Half Axle Type
  - 7.3.2.6 Rear Independent Suspension System
- 7.3.3 Air Supension System

7.4 Advantages and Disadvantages of Independent Suspension System

7.5 Shock Absorber
- 7.5.1 Friction Type
- 7.5.2 Hydraulic Type
- 7.5.3 Air Type

7.6 Suspension System Trouble Shooting
- 7.6.1 Noise In Suspension System
- 7.6.2 Frequent Failure in Leaf Spring
- 7.6.3 Uncomfortable Ride in Vehicle

3QI7B

Learning objectives

1. Explain about the various types of Springs used in automobiles
2. Describe about the construction and working principle of various suspension system used in automobiles
3. Explain about the purpose types and operations shock absorbers

BAE_ENG_Chapter_07.indd 123 01/11/2022 11:53:04 AM

7.0 Introduction

Many sub systems are assembled to form an automobile. With this automobile, the passenger and goods are transported from one location to another location. During travelling, if the road shocks are transmitted to the chassis without absorption, then it will provide uncomfortable ride to the passengers as well as lead to failure of vehicle parts and goods transported. To prevent this, suspension systems are used and it is located between the axle housing and the vehicle chassis. Thus, the suspension system in automobile is a very important in deciding vehicle drive comfort and the stability of the vehicle.

7.0.1 Functions of suspension system

1. To reduce the effect of the shock and provide comfortable ride.
2. To prevent the damage of the vehicle parts when the vehicle travel over a rough road.
3. To prevent the steering system from road shocks
4. To prevent the occurrence of roll over when the vehicle travel over an irregular road.
5. To connect the chassis and frame.

7.0.2 Properties of Suspension system

1. The initial cost and the maintenance cost should be low
2. Wear and tear of the parts should be low
3. Weight should be less

7.1 Spring

Spring plays a vital role in a suspension system. Spring is located between the wheel axle and the vehicle body or frame. When the vehicle runs over a rough road, the spring absorb the road shock by compression and expansion. Some part of the shocks are absorbed by the tyres.

7.1 Spring Types

7.1.1 Steel Springs
7.1.2 Rubber Spring
7.1.3 Air Spring
7.1.4 Plastic Spring

7.1.1 Steel Springs types

1. Leaf spring
2. Coil Spring
3. Stabilizer Bar
4. Torsion Bar

7.1.1 Leaf Spring

Introduction

This type of springs is widely used in light and heavy commercial vehicles.

Construction

A leaf spring is built with number of leaves. The leaves are placed one over the other, and are held together by clamps and a bolt at the center. The leaves are usually given an initial curvature or chambered, so that they will tend to straighten under load. The spring is clamped to the housing by means of U – bolt. The longest leaf known as the main leaf or master leaf has its ends formed in the shape of an eye.

BAE_ENG_Chapter_07.indd 124 01/11/2022 11:53:04 AM

One end of the leaf spring is attached to the frame through shackle as movable. Another end is attached with anchor pin as non movable.

Working Principle

When the vehicle travel over a road undulation, the force from the road act on the leaf spring and the spring gets straightened. This variation in length is accommodated by the oscillation movement of the shackle. Thus, the road force makes the deflection of the leaf spring and absorb the vibration. During deflection, the energy is stored in the leaf spring and the stored energy is dissipated when the leaf spring retains its original position. Thus the road shocks are reduced and the ride comfort is increased.

In light commercial vehicles spring rubber or hard plastic bush are used. Phosphorus bronze bushes are used in heavy commercial vehicles. The lubricating oil with graphite is used in the bushes for lubrication.

Material

Chromium vanadium steel, Chromium- Nickel- Molybdenum steel, Silicon- manganese steel, are the typical materials that are used in the manufacturing of leaf springs.

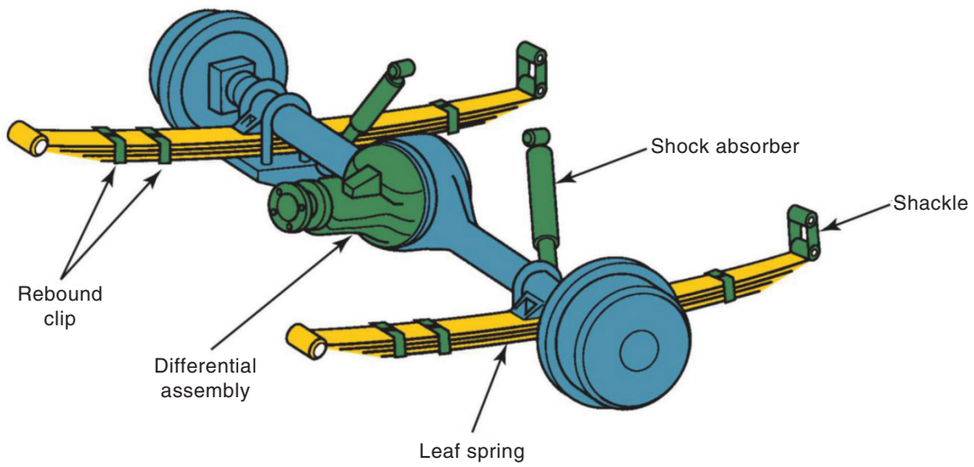

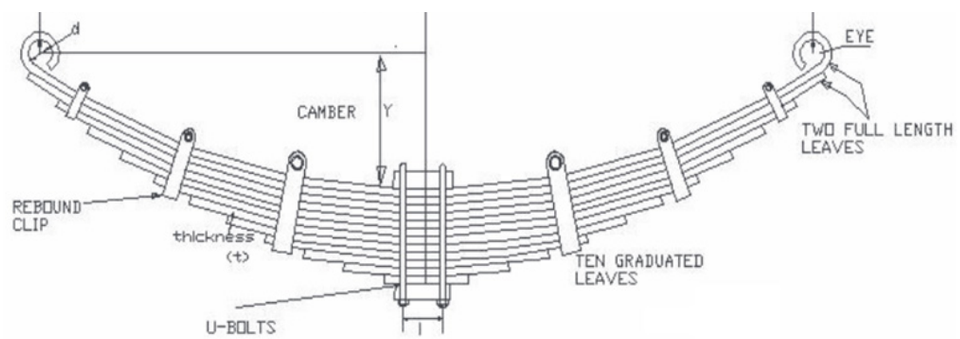

Figure 7.1.1 Leaf Spring

BAE_ENG_Chapter_07.indd 125 01/11/2022 11:53:04 AM

7.1.1.1 Type of Leaf Spring

7.1.1.1 (a) Quarter Elliptic Leaf Spring
7.1.1.1 (b) Semi Elliptic Leaf Spring
7.1.1.1 (c) Three Quarter Elliptic Leaf Spring
7.1.1.1 (d) Full Elliptic Leaf Spring
7.1.1.1 (e) Transverse Leaf Spring

(a) Quarter Elliptic Leaf Spring

The figure 7.1.1.1 (a) shows the simple arrangement. The one end is fixed on the side member of the frame by means of U Clamp or I Bolt while the other end is freely connected to the front axle. In such springs the camber is provided on the upward side so that the leaves tend to straighten when the front axle beam is subjected to shock load. The cost and the weight of this type spring is low. This is also known as the cantilever type leaf spring and it was used in olden days.

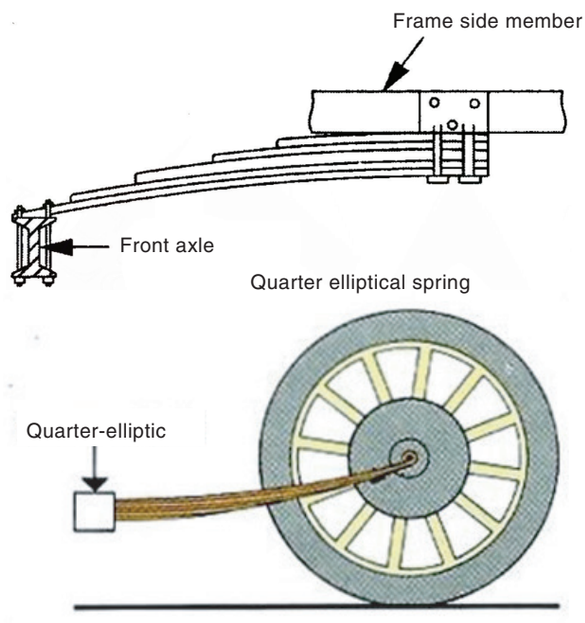

Figure 7.1.1.1 (a) Quarter elliptic leaf spring

(b) Semi-elliptical leaf spring

The simple construction is shown in the figure 7.1.1. (b). This type of arrangement is mostly used in automobile and it resembles the semi ellipse in shape. The leaf spring is made-up of a number of steel leaves. Each leaf is of a different length, but with equal width and thickness. The uppermost longest leaf having bushes at its two ends, is called the master leaf. The one end of the spring is rigidly fixed to the vehicle frame while the other end is attached with the help of shackle. The shackle accommodates the variation in the length while vehicle driving on rough terrains. This type of spring arrangement is requires less maintenance, easy to repair and it has long life.

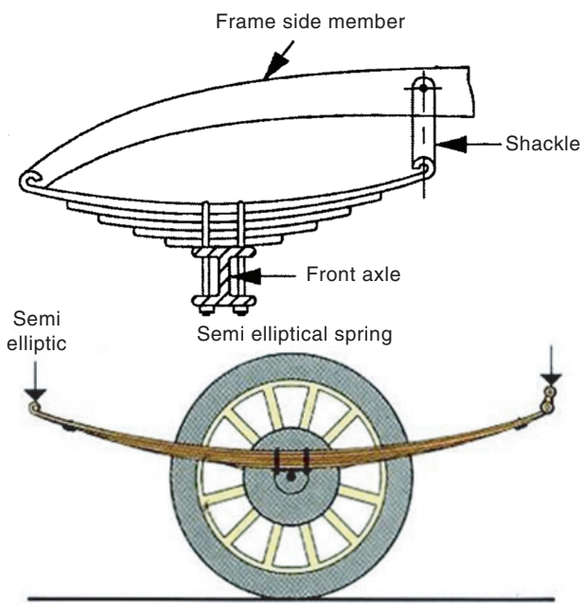

Figure 7.1.1.1 (b) Semi-elliptical leaf spring

(c) Three quarter elliptic leaf spring

The figure 7.1.1.1. (c) shows the arrangement. The three quarter elliptical spring is the combination of quarter elliptical spring and semi elliptical spring.

BAE_ENG_Chapter_07.indd 126 01/11/2022 11:53:04 AM

One end of the semi elliptical spring is attached to the frame through shackle and the other end of the semi elliptical spring is attached to the quarter elliptical spring by means of the shackle. The other end is bolted to the frames and being rigidly held by I – bolt. This type of arrangement was more popular in olden days and not used now-a-days.

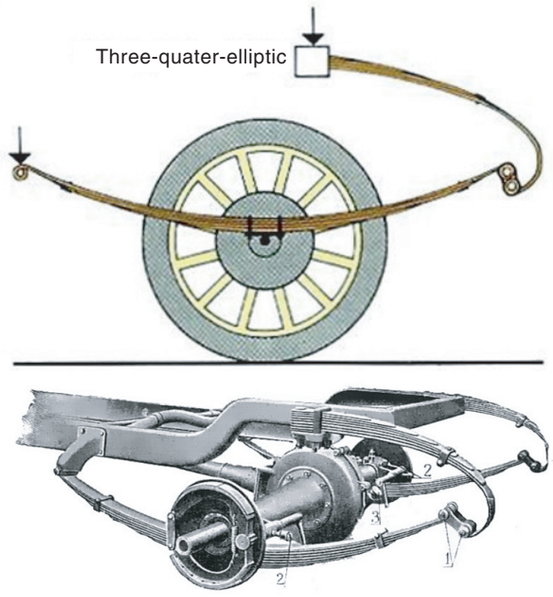

Figure 7.1.1.1 (c) Three quarter elliptic leaf spring

(d) Full Elliptic Leaf Spring

The simple construction of this type is shown in figure 7.1.1.1 (d). In this type, two semi elliptical springs are connected in opposite manner to form an elliptical shape. The full elliptical spring is attached rigidly to both the axle and the frame. Spring shackles are not necessary, since both the top and bottom members will elongate by the same amount when compressed. This arrangement was used in olden cars and not used now-a-days.

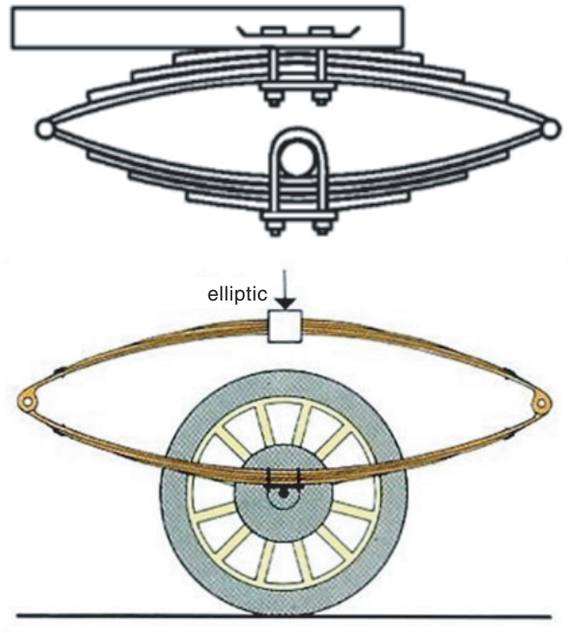

Figure 7.1.1.1 (d) Full elliptic leaf spring

(e) Transversely mounted semi-elliptical inverted leaf spring

The figure 7.1.1.1 (e) shows the arrangement. In this arrangement, a semi-elliptical leaf spring is mounted transversely along the width of the vehicle. The springs are placed, so inverted that the longest leaf is located at the bottom. The mid portion is fixed to the frame by means of U-bolt. The specialty of this arrangement is the use of two shackles. The rolling tendency of this type leads to its unsuitability for vehicles.

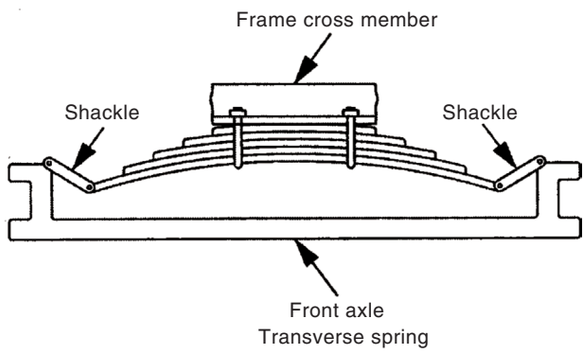

Figure 7.1.1.1 (e) Transversely mounted semi-elliptical inverted leaf spring

BAE_ENG_Chapter_07.indd 127 01/11/2022 11:53:05 AM

7.1.1.2 Coil Spring

Its simple layout can be seen in the figure 7.1.1.2. In this type one end of the spring is fixed with the frame, another end is fixed with the lower control arm. When the vehicle rises over a bump the spring gets compressed and it will absorb the energy. When the vehicle gets down from the bump the spring expanded and release the energy.

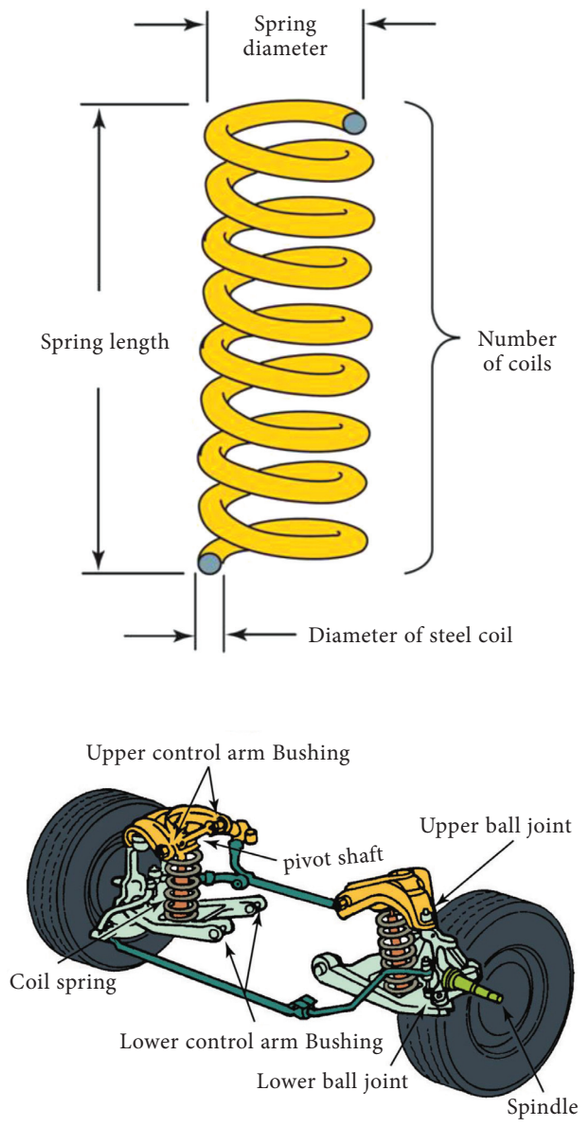

Figure 7.1.1.2 Coil spring

This type of suspension is commonly used in Independent Suspension Systems and in Light Vehicles. It can be used in both front and rear independent suspension systems. It absorbs energy twice than that of leaf spring. Coil spring can withstand shear stress and bending stress.

Advantages

1. Less noise
2. Less weight
3. Less space is enough.
4. Simple in design.

Disadvantages

1. It can not withstand the torque and lateral forces.

7.1.1.3 Stabilizer bar

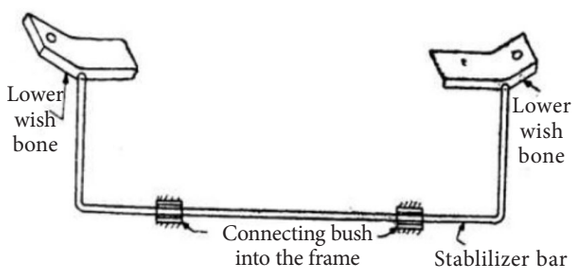

Figure 7.1.1.3 Stabilizer bar

The stabilizer bar is shown in figure 7.1.1.3. The stabilizer bar is mounted in between the two wheels. Stabilizer bars are part of a car's suspension system. They are sometimes also called anti-sway bars or anti-roll bars. The main purpose is to try to keep the car's body from "rolling" in a sharp turn. During turning, body roll occurs when more weight is placed on the outside tires and less weight is placed on the inside tires, which in turn reduces traction and vehicle control. The

BAE_ENG_Chapter_07.indd 128 01/11/2022 11:53:06 AM

stabilizer bar is used to make the body of the vehicle will remain flat throughout a turn so the weight stays evenly distributed on all four tires. It is like a U shaped bar which used in front independent suspension system.

7.1.1.4 Torsion Bar

The simple layout of torsion bar is shown in the figure 7.1.1.4. The torsion bar is made up of hardened steel alloys. It works based on the torque principle. It is used in the independent suspension system. The one end of the torsion bar is fixed with frame and another end is fixed with wheel arm. Wheel arm is supported by bearing. Another end of wheel arm is attached with the wheel hub spindle.

While travelling in bumpy road, the vibration absorption takes place by twisting. To fix the torsion bar, a minimum space is required.

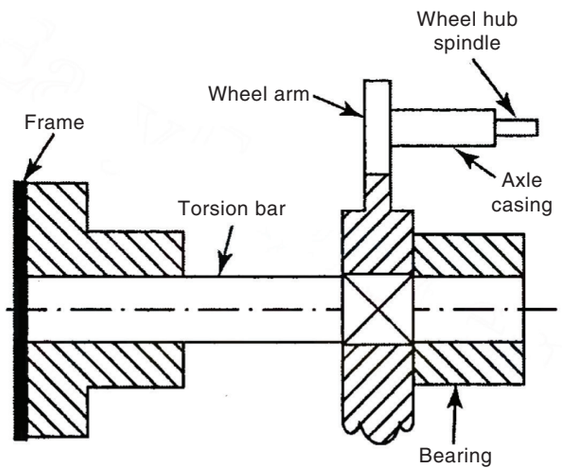

Figure 7.1.1.4 (a) Torsion bar

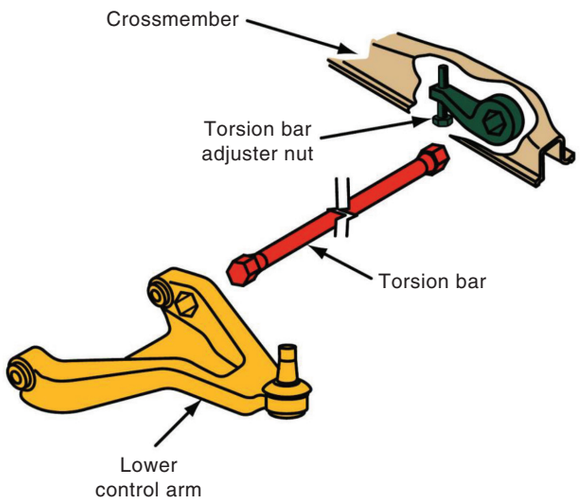

Figure 7.1.1.4 (b) Torsion bar

7.1.2 Rubber Spring

The layout of rubber spring is shown in figure 7.1.2. Rubber springs are used in suspension systems. It absorbs more vibrations than metal springs. There are different types of rubber springs are used.

1. Compression spring
2. Compression shear spring
3. Steel reinforced spring
4. Progressive spring

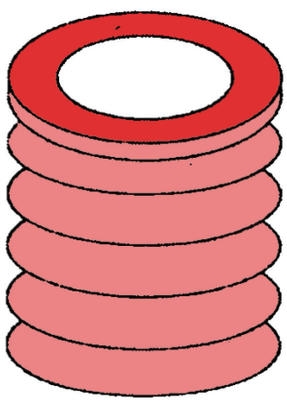

Figure 7.1.2 Rubber Spring

BAE_ENG_Chapter_07.indd 129 01/11/2022 11:53:07 AM

Advantages

1. It has the ability to store more energy than steel and iron springs.
2. It will not break suddenly like metallic springs.
3. The life of the spring is higher.
4. Rubber can withstand vibrations very well.

7.1.3 Air Spring

The layout of air spring is shown in figure 7.1.3(1&2). Air spring gives more comfort and smooth ride to the travellers. It provides more comfortable ride when the vehicle is unloaded and loaded conditions. They are classified into two types, namely,

7.1.3 1. Bellow Type
2. Piston Type

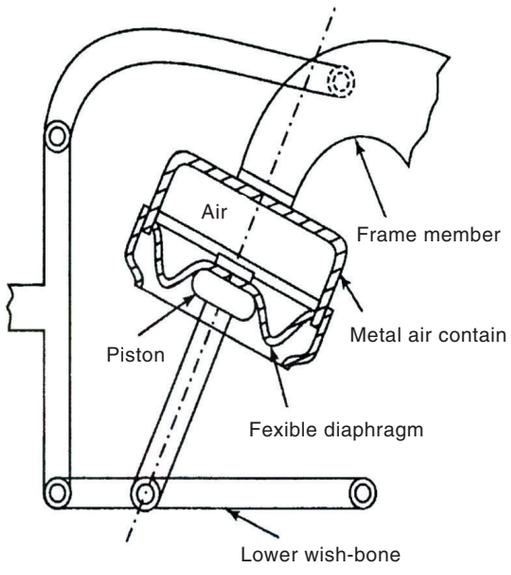

Figure 7.1.3 (2) Piston Type

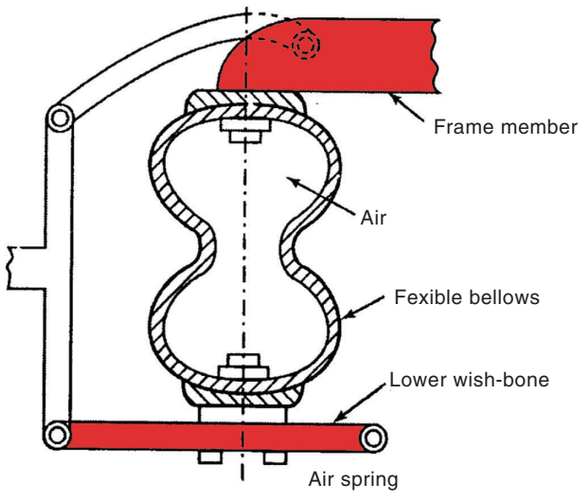

Figure 7.1.3 (1) Bellow Type

7.2 Helper Spring

This system is widely used in heavy commercial vehicles, trucks. This helper spring does not function during light load condition. As the load increases, beyond a certain level, the spring will start functioning. The helper spring is integrated along with the Master leaf in leaf spring. Due to the increased load, the master leaf spring and helper leaf gets fully expanded and the helper spring touches the special bracket, makes the helper leaf to function. This type of helper leaf is widely used in the rear axle.

7.3 Types of suspension system

1. Conventional suspension system
2. Front or Rear independent suspension system
3. Air suspension system
4. Hydro elastic suspension system

BAE_ENG_Chapter_07.indd 130 01/11/2022 11:53:08 AM

7.3.1 Conventional suspension system

In this type, wheels are mounted on the two sides of the axle. Leaf spring or coil spring is mounted in between the chassis frame and axle. One end of the leaf spring is attached rigidly usually the front, and the other end is attached through a shackle as movable. The vibration is absorbed by the compression and expansion of leaf spring while travelling over a road with bump and pit. Two ends of the master leaf are connected with the kingpin and knuckle, so that vibration transferred from one side to another. These types of suspension systems are mostly used in rear wheels alone.

Advantages

1. Simple in design
2. Low cost
3. Less number of components
4. Less maintenance

Disadvantages

1. Road shocks from one wheel is transmitted to another wheel. If the road is irregular, the whole vehicle leans on one side.
2. As both the wheels do not get up or down simultaneously, so they will rotate in different positions.

Note

Due to the gyroscopic effect during turning, wheel wobble or wheel shimmy takes place in a wheel. This is a very dangerous problem.

7.3.2 Independent Suspension system

Independent Suspension systems are commonly used in the front axle. When a wheel climbs a bump, the other wheel will travel in its own path. Hence, the vibration will not be transmitted from one wheel to another which leads to smooth ride to the passenger.

Types of Independent front suspension system

1. Wishbone or Parallel link type.
2. Vertical guide type
3. Trailing link type
4. Macpherson strut type
5. Swing half axle type.

7.3.2.1 Wishbone suspension system

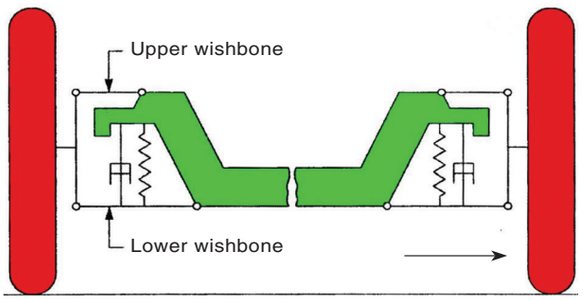

Wishbone type independent suspension with coil spring

Figure 7.3.2.1 Wishbone suspension system

This system is shown in the figure 7.3.2.1. This type of suspension system is often used for front wheels. In this system, two arms namely upper wishbone arm and lower wishbone arm are used. The upper wishbone has a short arm and lower wishbone is a long arm and it is connected with the frame. Vibration damper and coil spring are fixed over the rubber pad in between the lower wishbone arm and fixed cross member.

Wishbone Arms keep the wheel in its position and transmit the load to the spring. Therefore, the tractive force,

BAE_ENG_Chapter_07.indd 131 01/11/2022 11:53:08 AM

brake force and lateral force get absorbed. Due to the shortened length of the upper arm the tire wear gets reduced.

Special Features

1. Since length of upper wishbone is shorter than the lower wishbone, wheels are slightly inclined. This leads to no slip in the tyre and the wheel track does not change and hence the tyre wear is reduced.
2. The two wishbone arms help in positioning the front wheels and they withstand the braking torque while braking.
3. There is no effect on one wheel while other wheel travels through ups and downs in the road.

7.3.2.2 Vertical guide suspension system

The simple layout is shown in figure 7.3.2.2. It is the first developed independent front suspension system. In this suspension the kingpin is directly attached to the cross member of the frame and spacing rod. The coil spring is fitted as shown in the figure.

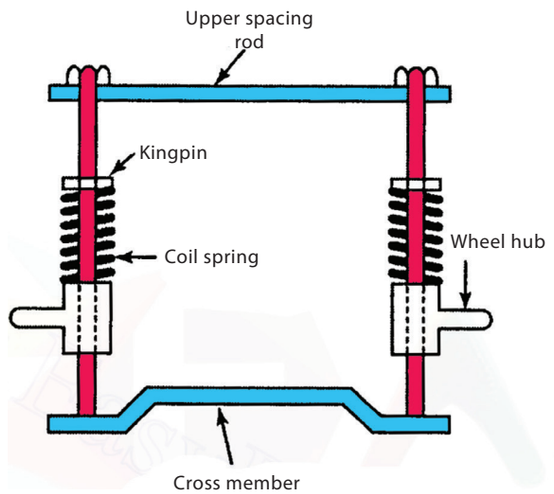

Figure 7.3.2.2 Vertical guide suspension system

When the wheel travel over the bumpy road, spring compress or expands and this makes the stub axle to slide up and down. In this type, caster angle, camber angle and wheel direction are remained unchanged as the wheel moves up and down. However, the disadvantage is less strength.

Notes

1. While the vehicle running, the sliding member is also moving up and down. Therefore, the spring gets compressed and elongated continuously.
2. When the specific wheel going through up and down, the sliding member is also moving up and down. However, the castor and camber angle will not change.
3. This is system cannot be used because of its less strength.
4. The efficiency of the system is based on the sliding member movement accuracy.
5. It is difficult to avoid the shock and less holding that can occur.

7.3.2.3 Trailing link types

Construction

The figure 7.3.2.3 shows the construction of the trailing link type. In this type of suspension system, coil springs are positioned between cross member and the trailing link. On the other side of the trailing link, wheels are fixed. In some vehicles, torsion bars are used instead of horizontal coil spring.

Working principle

When the vehicle wheel passing over the bumps and pits, trailing arm oscillates

BAE_ENG_Chapter_07.indd 132 01/11/2022 11:53:08 AM

DO YOU KNOW?

In Russia it's considered a criminal offense to drive with a dirty car. 16% of people never wash their car.

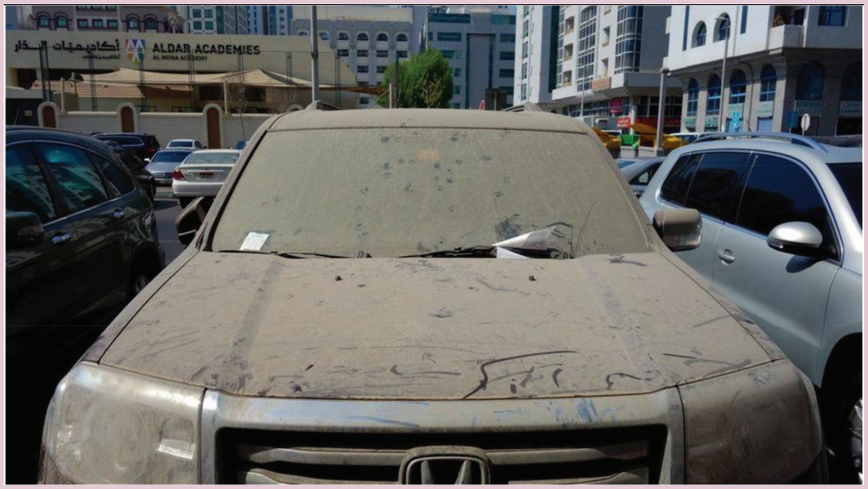



like a springboard. The road disturbance is absorbed by spring deflection. Multiplate shock absorber is used to dissipate the stored energy in spring. This type of suspension system usage is very limited in vehicles, it is because of the maintenance and repair of this suspension system are complex in nature.

7.3.2.4 Mac Pherson Strut types

Constructions are shown in the figure 7.3.2.4.

Introduction

It is named after American automotive engineer Earle S. Mac Pherson, who originally invented and developed the design. It is widely used in the front suspension vehicles. The MacPherson Strut type suspension system consists of with a telescopic strut and a single arm along with a diagonal stay. Lower Wishbone arm is alone available in this system. Shock absorber and spring are

BAE_ENG_Chapter_07.indd 133 01/11/2022 11:53:08 AM

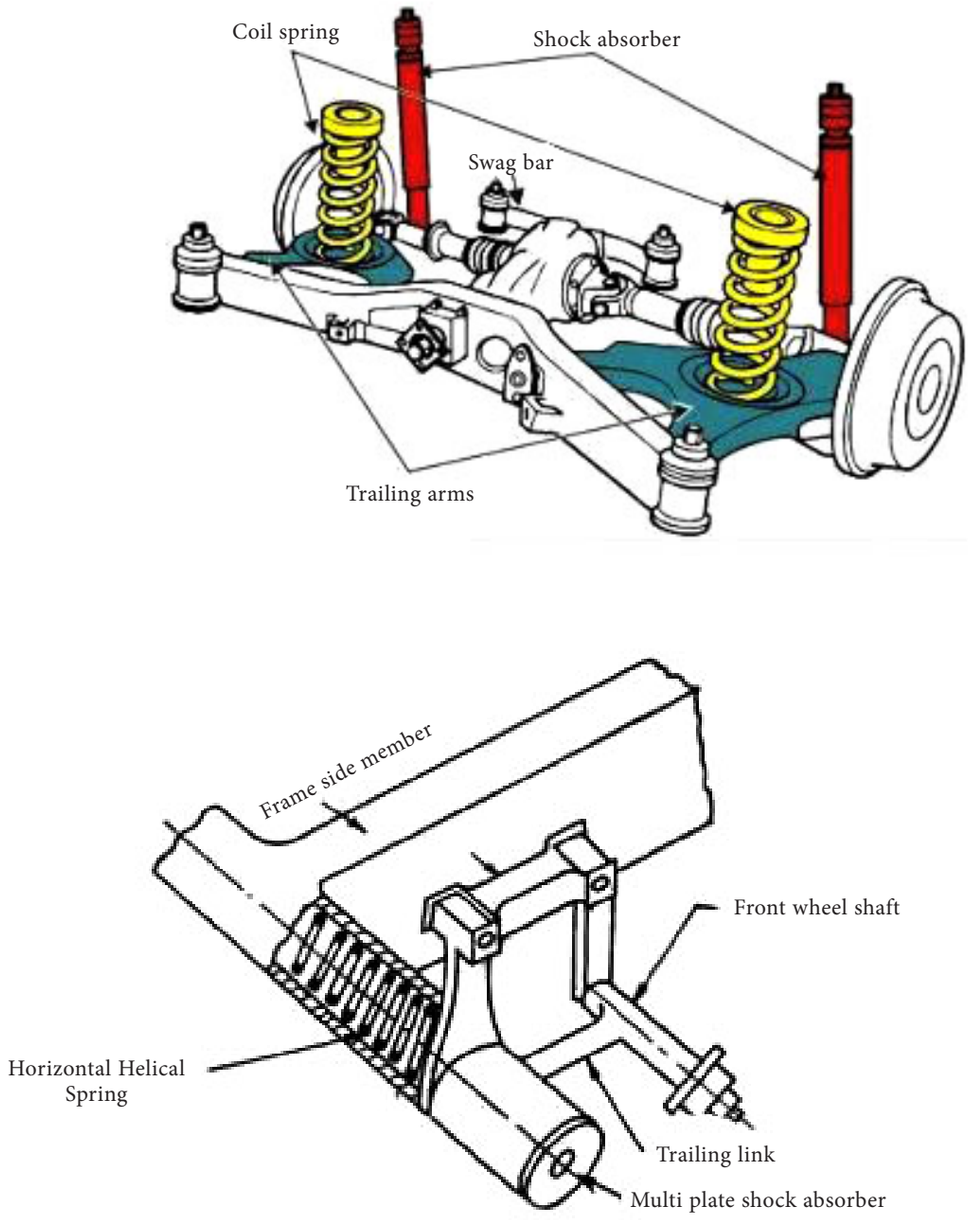

Figure 7.3.2.3 Trailing link suspension

acting as an integrated unit known as strut. Stub axle support the strut and stub axle hold the wheel.

When the vehicle wheel moves over the bumps and pits, Camber angle remains unchanged. It provides more amount of space to mount engine. Hence, this is most widely used in front wheel drive vehicle like Maruthi 800, Hyundai.

Advantages

1. Simple in construction
2. Minimum number of parts
3. Ease of maintenance

BAE_ENG_Chapter_07.indd 134 01/11/2022 11:53:08 AM

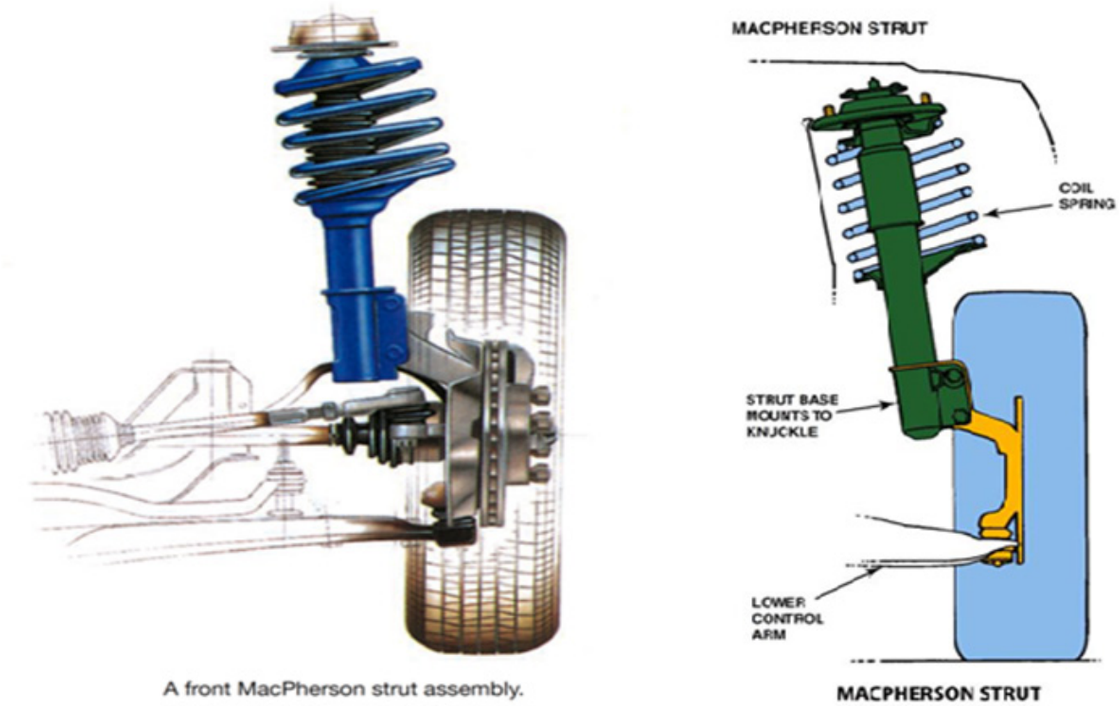

Figure 7.3.2.4 MacPherson Strut types

7.3.2.5 Swing half axle types

The simple construction is shown in the figure 7.3.2.5. Wheels are firmly fixed on one end of the half axle and the other end of the half axle is fixed to the center point of the chassis frame. Coil spring and shock absorber are mounted as shown in the figure. When the wheel passes the bumps and pits, axle get oscillates. As the vehicle moves on the irregular roads, coil spring and shock absorber are stretched or compressed simultaneously to take the road disturbances.

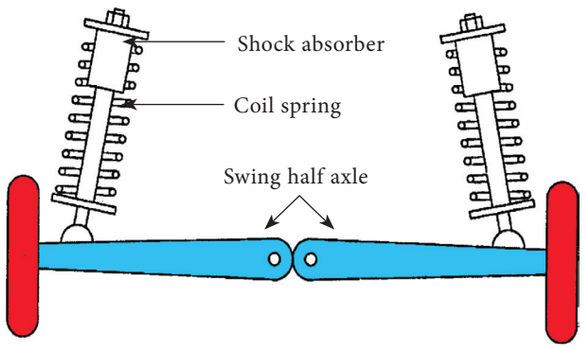

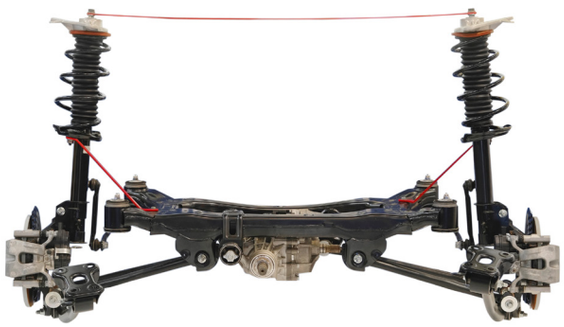

Figure 7.3.2.5 Swing half axle types

7.3.2.6 Rear axle independent suspension system

Rear axle independent suspension system construction is given in the figure 7.3.2.6. In most of the vehicles, the drive from the engine is given to the rear wheels. Hence it is difficult to design, construct and installing an independent suspension system in rear wheel drive vehicles. The differential unit is firmly fixed on the chassis cross frame member. Two

BAE_ENG_Chapter_07.indd 135 01/11/2022 11:53:09 AM

universal joints (A & B) are there in between differential unit and wheel, movable coupling (C) allows to move up and down motion of the wheel. A shock absorber is incorporated to the system. With the help of these components, the system absorb the road disturbance when the vehicle passes over the bumps and pits.

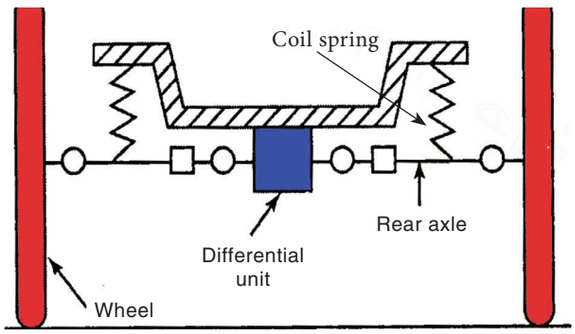

Figure 7.3.2.6 Rear axle independent suspension system

7.3.3 Air suspension system

These types of suspension systems are commonly used in a long-distance vehicle like buses. Due to the benefits of the air suspension system, nowadays this system is widely used in many vehicles.

Schematic representation of this type of air suspension system is shown in the figure 7.3.3(1&2). It consists of four air springs which may be a bellow type or piston type. Air compressor is used to pressurize the purified air (through filter) from the atmosphere and stored in the accumulator at a pressure maintained between 5.6 to 7 kg/cm^2. To release the excess air and to maintain the pressure inside the accumulator, a safety relief valve is used. The high pressure compressed air enters into the air spring through leveling valve and lift control valve. The lift control valve was operated by a manual lever which is located in the panel board.

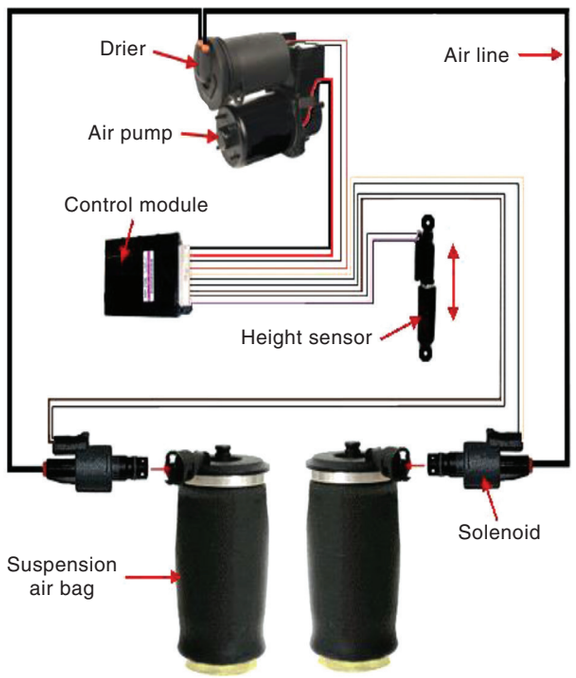

Figure 7.3.3 (1) Air suspension system

Advantages

1. It reduces noise, vibration, and harshness due to which passenger and driver attain better ride comfort. It reduces the journey tiredness of the driver and the passenger.
2. Change of spring deflection is quite low when compared with a conventional suspension system for both loading and unloading condition. This helps to reduce the load transfer on the vehicle.
3. Headlamp alignment remains constant though the vehicle is travelling over irregular roads.
4. With the help of automatic controlling tools, this system will provide some space for required wheel movement.

BAE_ENG_Chapter_07.indd 136 01/11/2022 11:53:09 AM

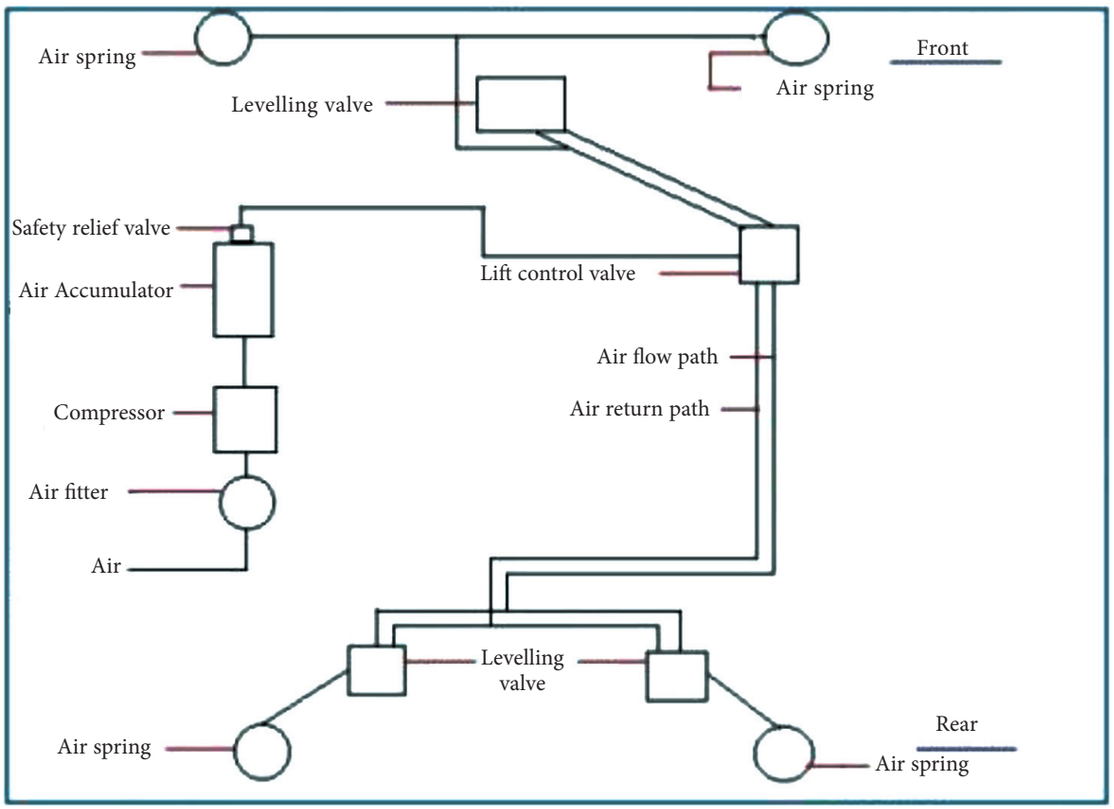

Figure 7.3.3 (2) Air suspension system

7.4 Independent suspension system advantages and disadvantages

Advantages

1. When one side of the wheel is subjected to road disturbance, then this disturbance does not transmit to the other side of the wheel.
2. During cornering, the rollover, the skid, pull on one side etc will not occur.
3. It provides good road holding property.
4. It promotes easy turning of the vehicle and have better control.
5. It ensures good ride quality.
6. It prevents the wheel from turning towards the kingpin axis.
7. In front wheel steering vehicles, it provides space to locate the engine.
8. It reduces the unsprung weight.
9. It controls the effect of steering geometry hence steering is easier.

Disadvantages

1. It has more probable for tyre wear.
2. Comparatively, the cost is high.
3. Requires more maintenance and it is complex.
4. Maintenance cost is high.
5. It requires good quality shock absorber to enhance the ride comfort.
6. Construction is complex.
7. More benefits when it is mounted in the front axle than rear axle.

BAE_ENG_Chapter_07.indd 137 01/11/2022 11:53:09 AM

7.5 Shock absorber

The spring system prevents the travelers and truckloads that do not cause any shocks when climbing up the sudden disturbance on the road. However, if the spring are stiffer than expected, it will not absorb the road shock. The spring will keep on oscillate even after crossing the disturbance till the energy is completely die out. Hence, to quickly dissipate the stored energy in springs, dampers are used.

According to the working principle shock absorber are classified into three types they are,

1. Friction type
2. Hydraulic type
3. Air type

7.5.1 Friction type

When one body is allowed to slide over the other, the surface of one body offers some resistance to the movement of the other body on it. This resisting force is called friction force. In leaf spring, the interleaf friction is act as a damper. It is not widely used with other types of springs.

7.5.2 Hydraulic type

This type of damper is most widely used in the suspension system. It works based on Pascal'slaw. They are further classified into two types.

(i) Pistontype
(ii) Telescopic type

Telescopic type

It works on the basic principle of Pascal's law. Damping is obtained as high-velocity fluid passing through a tiny hole. This system is also called telescopic shock absorber and because of use of hydraulic, it is also called as hydraulic damper.

Construction

Figure 7.5.2.2 shows the construction details of this shock absorber. The head is fixed inside the cylinder. The piston and two way valve located on the top portion of the Cylinder is assembled with piston rod for up and down motion. The other end of the piston rod has eye and it is attached to the chassis frame. On the bottom portion of the cylinder another two way valve named as foot valve is attached. In this two way valve, one valve is used for fluid inlet and other valve is used for fluid outlet. Cylinder is filled with fluid.

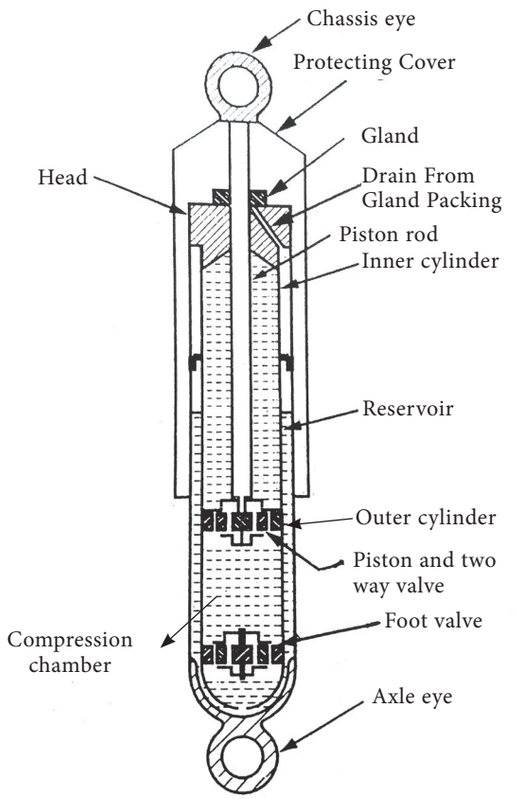

Figure 7.5.2.2 Telescopic type shock absorber

BAE_ENG_Chapter_07.indd 138 01/11/2022 11:53:10 AM

Inner portion of the cylinder is called as tube and the gap between the outer portion of the inside tube and that of the inner portion of the outside tube is used for fluid storage and it is called as reservoir. A gland is fixed at the top portion of the cylinder. When damper is in operation, Gland is used to scrap the excess oil in the piston rods to the reservoir. When suspension works, fluid from the glands has been sent it to reservoir through piston rods.

The lower portion below the piston of the inner cylinder, is called as compression chamber and the top portion above the piston is called as rebound chamber. Damping fluid is made up of with 60% transform oil blended with 40% turbine oil.

Working principle

When the vehicle passes over the road disturbance, it piston moves down and this movement of piston pressurizes the fluid at the bottom portion. Then this fluid flows into the rebound chamber from compression chamber through a valve located on the top portion of the piston and the remaining portion flows into the reservoir through foot valves.

Similarly, when the vehicle comes to normal road condition, the piston moves from downward to the upward direction, so that the fluid at the top portion of the piston is compressed. This pressurized fluid is sent inside the compression chamber through the piston valve and the remaining amount of the fluid which again fed back from the reservoir through the foot valves. Because of this upward and downward motion of the piston, the fluid becomes highly pressurized and hence the energy due to road shock has been absorbed.

7.5.3 Air type

Air suspension is nowadays the most popular on commercial vehicles. It works on the principle of air so it is called as air type shock absorber.

7.6 Troubles, Causes and remedies of the suspension system

7.6.1 Noise in the suspension system

Sl. No.	Causes	Remedies
1	Loose, worn, un lubricated spring or suspension parts	Lubricate, tighten or repair
2	Worn out bushes	Replace the bush
3	Weak / Broken / Defective spring	Replace
4	Worn out shackle pin	Replace

7.6.2 Frequent failure in leaf spring

Sl. No.	Causes	Remedies
1	Defective shock absorber	Replace
2	Vehicle heavily loaded	Avoid overload
3	Tight spring shackle	Loosen, Rectify / Replace
4	Sudden brake in high speed	Apply brake gradually

BAE_ENG_Chapter_07.indd 139 01/11/2022 11:53:10 AM

7.6.3 Uncomfortable ride in vehicle

Sl. No.	Causes	Remedies
1	Misalignment of suspension system	Align the system
2	Defective shock absorber	Rectify / replace
3	Loosened U-Bolt	Tighten
4	Seized shackle pin	Clean and lubricate / replace the damaged parts



- Hong Kong is home to the most Rolls Royce's in the world.



- Red cars are prohibited in Shanghai, China.



BAE_ENG_Chapter_07.indd 140 01/11/2022 11:53:10 AM

- 1 out of every 4 cars produced in the world come from China.



- The world's most profitable car manufacturer is Porsche.





BAE_ENG_Chapter_07.indd 141 01/11/2022 11:53:11 AM

Student Activity

1. Students are advised to submit a report based on visit to nearest Automotive workshop to study how suspension system is installed in a vehicle.
2. Students are advised to submit a report on construction and working principle of air suspension system used in modern Automobiles with line sketches.

Glossary

1.	Plastic	–	நெகிழி
2.	Leaf Spring	–	பட்டை வில் தொகுப்பு
3.	Coil Spring	–	சுருள் வில்
4.	Bellow type	–	மடிப்புரை வகை
5.	Shackle	–	அசைவுக்கரம்
6.	Cantilever	–	நெடுங்கை
7.	Torsion bar	–	முறுக்கு தண்டு
8.	Shock Absorber	–	அதிர்வு உறிஞ்சி
9.	Face Shear	–	முகப்பு வெட்டு
10.	Reinforced	–	வழுவூட்டப்பட்ட

References

1. S.K. Gupta, A Text Book of Automobile Engineering, S. Chand and Company, New Delhi, ISBN 978-93-837-4691-0, First Edition 2014, Reprint 2016.
2. Automobile Engineering, 2nd Edition, Sci Tech Publications (India) Pvt Ltd, 2011. Ramalingam. K.K.
3. Kirpal Singh, Automobile Engineering, Vol 1, Standard Publisher and distributor, ISBN – 13 – 978-8180141966
4. Jack Erjavec- Automotive Technology_ A Systems Approach -Delmar Cengage Learning (2009) ISBN-13: 978-1428311497
5. James D. Halderman, Automotive Technology, Principles, Diagnosis and service, fourth Edition, 2012, Prentice Hall, ISBN - 3: 978-0-13-254261-6
6. K.K.Jain and R.B.Asthana, Automobile Engineering, Tata McGraw-Hill Publishing Company Limited, New Delhi
7. R.K.Rajput, A Text Book of Automobile Engineering, Laxmi Publications, New Delhi.
8. A.K. Babu & Er. Ajit Pal Singh, Automobile Engineering, S.Chand Publishing, New Delhi
9. Internal Combustion Engines by V. Ganesan, Tata McGraw-Hill Education, 2004
10. Automotive Mechanics by William Crouse, Donald Anglin

BAE_ENG_Chapter_07.indd 142 01/11/2022 11:53:11 AM

Webliography

1. http://mechanicalmania.blogspot.com/2011/08/suspension-system-introduction.html
2. http://www.tirereview.com/the-role-of-springs-in-suspension-systems/
3. http://aermech.com/suspension-different-types/
4. http://www.mech4study.com/2015/09/types-of-shock-absorber-suspension-parts.html
5. https://shop.advanceautoparts.com/r/advice/car-maintenance/troubleshooting-your-vehicle-suspension

Evaluation

543CS

PART - A

One mark questions

Choose the correct answer

1. In leaf spring, one end of the spring is fixed and the other end of the spring is attached to _____
   a) U - bolt
   b) I - bolt
   c) Shackle
   d) Axle shaft

2. The up and down motion of the vehicle is called as _____
   a) Damping
   b) Bouncing
   c) Pitching
   d) Rolling

3. Energy stored in the coil spring during
   a) Compression
   b) Straightening
   c) Expansion
   d) Bending

4. Hydraulic damper is working based on the principle of
   a) Newton Law
   b) Principle of Lever
   c) Principle of friction
   d) Pascal Law

5. In which type of vehicle, helper springs are used?
   a) Light vehicles
   b) Heavy vehicles
   c) Two wheeler
   d) Three wheeler

PART - B

Three mark questions

1. State the requirements of a suspension system?
2. Classify the types of leaf spring?
3. Write short notes on helper spring.

BAE_ENG_Chapter_07.indd 143 01/11/2022 11:53:11 AM

4. What will happen if suspension system fails?
5. State the advantage of rubber Springs?
6. Classify the types of suspension system
7. State the types of air spring?
8. List out the types of shock absorber.
9. How leaf spring is mounted on a vehicle?
10. State the function of suspension system?

PART - C

Five mark questions

1. With the aid of neat sketch, explain torsion bar.
2. Draw any one type of leaf spring and indicate its parts.
3. State the advantage of air suspension.
4. Highlight the advantage and disadvantage of a coil spring.

PART - D

Ten mark questions

1. State the advantage and disadvantage of independent suspension system?
2. With the aid of simple sketch, explain the construction and working principle of shock absorber.
3. Explain with neat sketch, the principle of wishbone type suspension system.
4. With the aid of line diagram, explain the construction and working principle of air suspension system.

BAE_ENG_Chapter_07.indd 144 01/11/2022 11:53:11 AM

UNIT 8

Steering System



Contents

8.0 Introduction
8.1 Functions Of The Steering System
8.2 Parts Of Steering System
  8.2.1 Steering Parts And Its Uses
8.3 Steering Gear Box
  8.3.1 Types Of Steering Gear Box
    8.3.1.1 Rack And Pinion Type Steering Gear Box
    8.3.1.2 Cam And Peg Type Steering Gear Box
    8.3.1.3 Worm And Sector Type Steering Gear Box
    8.3.1.4 Recirculating Type Steering Gear Box
8.4 Power Steering
8.5 Reversible And Irreversible Steering
8.6 Steering Play
8.7 Steering Ratio
8.8 Turning Radius
8.9 Wheel Alignment
  8.9.1 Aim Of Wheel Alignment
  8.9.2 Angles In Wheel Alignment
    8.9.2.1 Caster Angle
    8.9.2.2 Camber Angle
    8.9.2.3 Kingpin Inclination
    8.9.2.4 Toe-In And Toe-Out
  8.9.3 Effects Of Improper Wheel Alignment
8.10 Difference Between Mechanical Steering And Power Steering
8.11 Front Axle
  8.11.1 Types Of Front Axle
    8.11.1.1 Dead Axle
    8.11.1.2 Live Axle
  8.12 Stub Axle
    8.12.1 Types Of Stub Axle
8.13 Troubleshooting, Causes And Remedies In Steering System
  8.13.1 Excessive Steering System Play
  8.13.2 Wheel Wobble
  8.13.3 Hard Steering
  8.13.4 Vehicle Pulling To One Side

Learning objectives

1. To make the students to understand on need and types of steering system.
2. To make the students to understand upon various components, construction and working principle of a steering system.

BAE_ENG_Chapter_08.indd 145 01/11/2022 11:55:54 AM

8.0 Introduction

The most conventional steering arrangement is to turn the front wheels using a hand-operated steering wheel which is positioned in front of the driver to allow it to deviate somewhat from a straight line. The system allows a driver to use only light forces to steer a heavy vehicle. Front axle carries the weight of the front part of the automobile as well as facilitates steering and absorbs shocks due to road surface variations. Let us see about the structure and its functioning in the following segment.

8.1 Functions of the steering system

- Steering system is helps to turn the front wheels on desired direction with the help of steering wheel.
- This system provides to vehicle steer in turning are also stabilize the vehicle on the straight road.

8.2 Parts of steering system

1. Steering Wheel
2. Steering Column
3. Steering Shaft
4. Steering Gear Box
5. Cross Shaft
6. Drop arm (or) Pitman arm
7. Drag Link (or) Pull and Push rod
8. Tie Rod or Track Rod
9. Ball Joint
10. Front Axle
11. Road Wheel

8.2.1 Steering parts and its uses

1. Steering Wheel

It is a circular wheel mounted at the centre portion with two or three rods. The steering wheel is connected with steering gear box through steering shaft. So the road wheels are turns easily when rotation of steering wheel.

2. Steering Column

It is hollow shaft in which is made up on alloy steel. The steering shaft rotates with the help of bearing. In modern vehicles, the gear change lever is provided at the steering column for the convenience of the driver.

3. Steering Shaft

It is made up of good quality steel. The upper end is fixed in steering wheel with the help of splines (or) key. The other end is connected to the steering gear box.

4. Steering Gear Box

The steering gear box serves the following purposes.

1. It provides mechanical advantages and enable the driver to steer the vehicle easily.
2. It converts the turning motion of the steering wheel into the to-and-fro motion of the link rod of the steering linkage.

5. Steering Linkages

- When the steering wheel is turned its motion is carried to the steering gear box through the steering shaft.

BAE_ENG_Chapter_08.indd 146 01/11/2022 11:55:54 AM

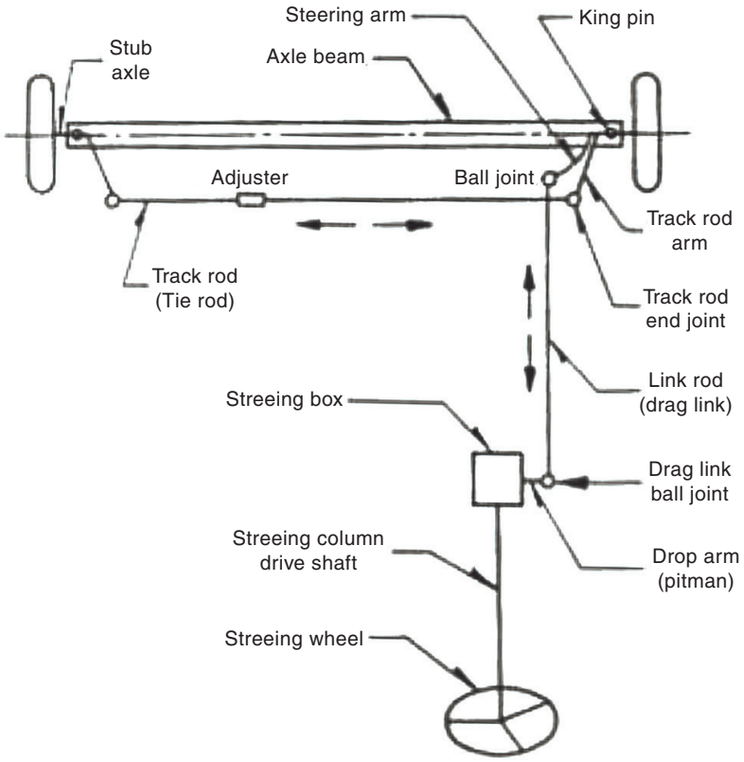

Figure 8.2.1 (a) Steering system

- This motion is converted into angular motion of the drop arm which is connected to the link rod.
- The other end of link rod is connected to the steering arm by means of ball joint. The steering arm is connected to the lower end of the stub axle. Both the steering arms are connected by a tie rod.
- When the steering wheel is to be turned to the right side or left side, the stub axle turns to the wheels either left or right side. The steering linkage as shown in figure 8.21 (a).

8.3 Steering gear box

- The case which holds the steering gear is called as steering gearbox.
- The Rotary movement of the steering wheel is converted into reciprocating motion of the steering linkage.
- The driver easily turns the stub axle either left or right side with the help of steering gear box.

8.3.1 Types of steering gear box

Based on the construction and working principle the steering gear box are classified into the following types

1. Worm and sector type
2. Worm and Roller type
3. Worm and Nut type
4. Worm and wheel type
5. Recirculating Ball type steering gearbox
6. Cam and Peg Steering Gear Box
7. Cam and Roller type
8. Rack and Pinion Steering Gear Box

BAE_ENG_Chapter_08.indd 147 01/11/2022 11:55:54 AM

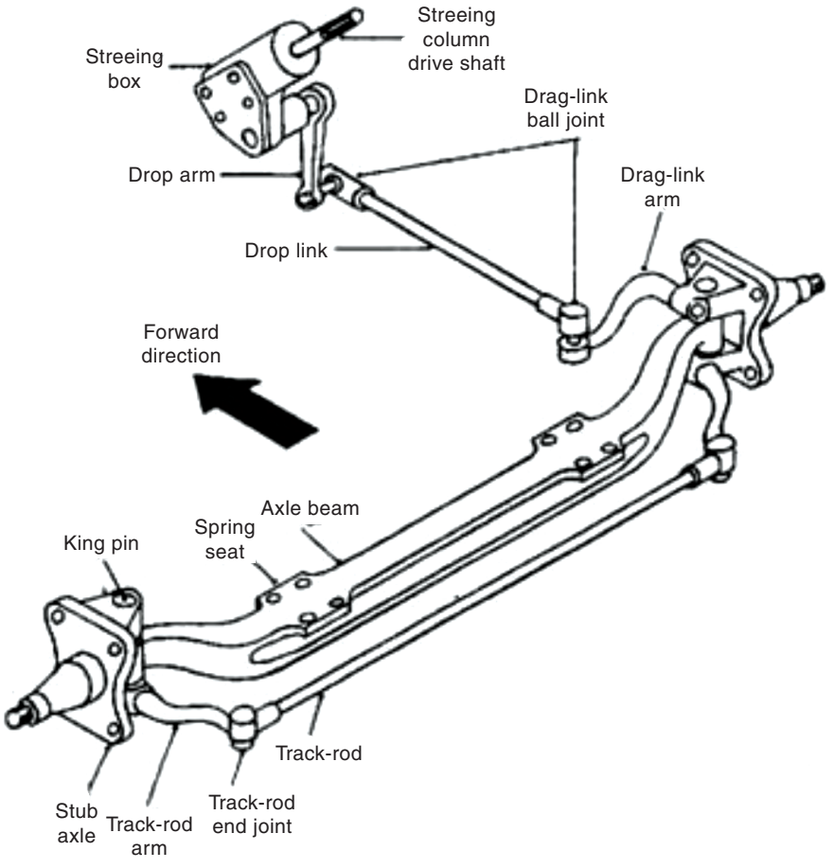

YZ6BV

Figure 8.2.1 (b) Steering system

8.3.1.1 Rack and pinion steering gear box

Construction

- In this type of steering gearbox, in place of cam or worm, the pinion gear is attached to the steering shaft through universal joints.
- The pinion is meshed with rack gear. The circular input motion of the pinion is converted into a linear rack output movement.
- The tie rod at each end of the rack is connected to the steering arm by means of ball joint.

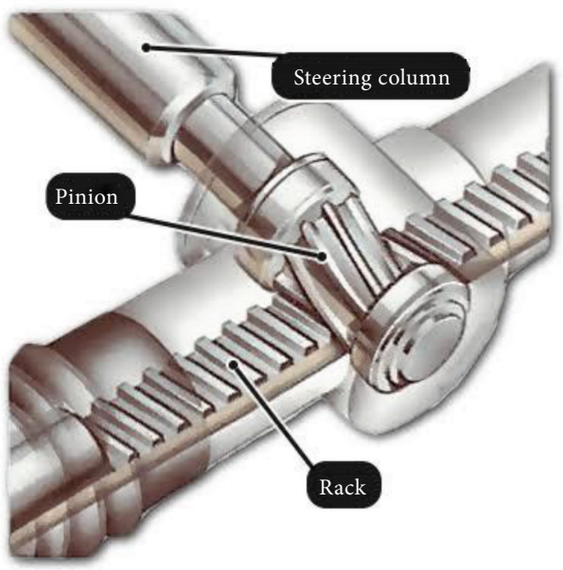

Figure 8.3.1.1 (a) Rack and pinion type steering gear box

Working Principle

- When the drive turns the steering wheel, the pinion at the end of steering wheels rotates at its own axis.
- Based on the direction of rotation of the pinion, the rack moves towards the left or right.

BAE_ENG_Chapter_08.indd 148 01/11/2022 11:55:56 AM

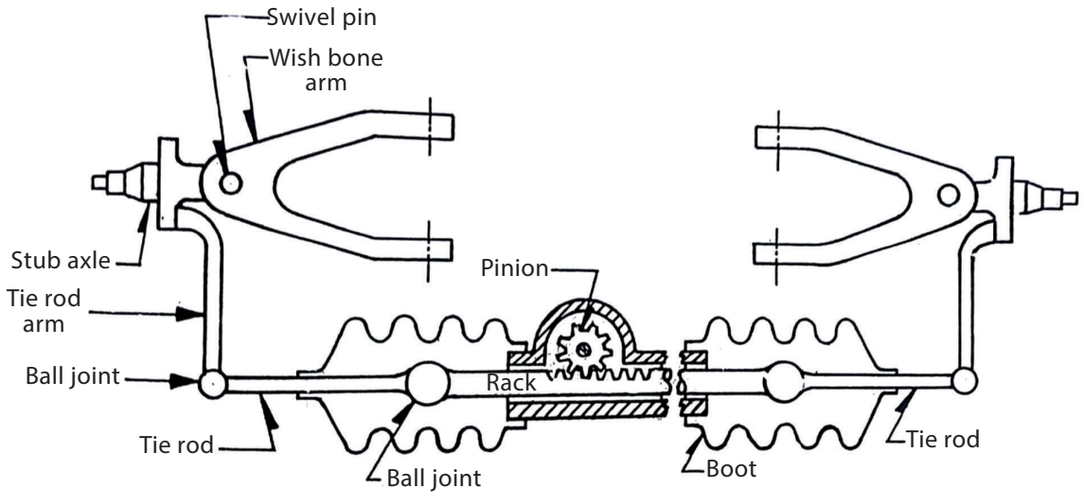

Figure 8.3.1.1 (b) Rack and pinion type steering gear box

- This rack movement, make the tie rod to push the steering arm on one side and to pull the steering arm on other side.
- This turn the stub axle at its pivot point. The wheel attached in the stub axle is also turned and thus the steering movement is achieved.

8.3.1.2 Cam and Peg Steering Gear Box

Construction

- This type of steering box, in place of worm, a cylindrical shaft, supported by two roller bearing in the housing.
- The cylindrical shaft carried a deep spiral groove, usually a variable pitch

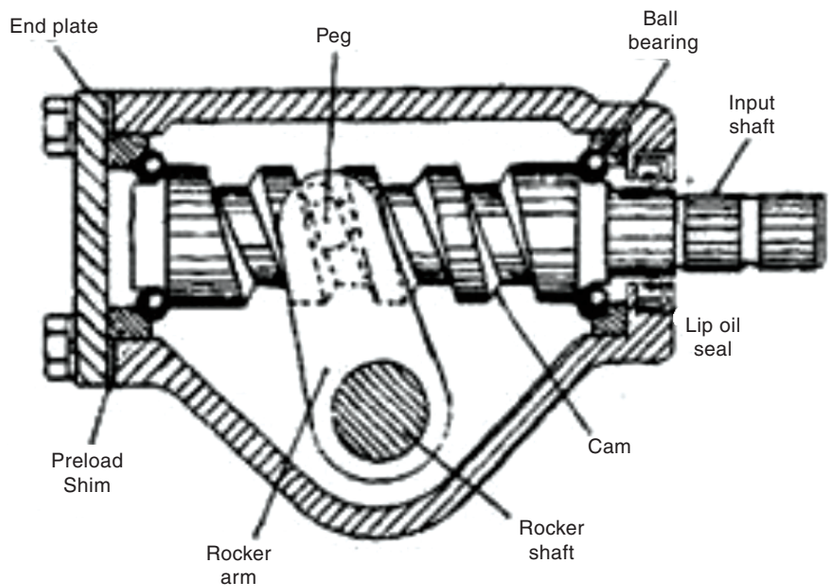

Figure 8.3.1.2 (a) Cam & peg type steering gear box

BAE_ENG_Chapter_08.indd 149 01/11/2022 11:55:56 AM

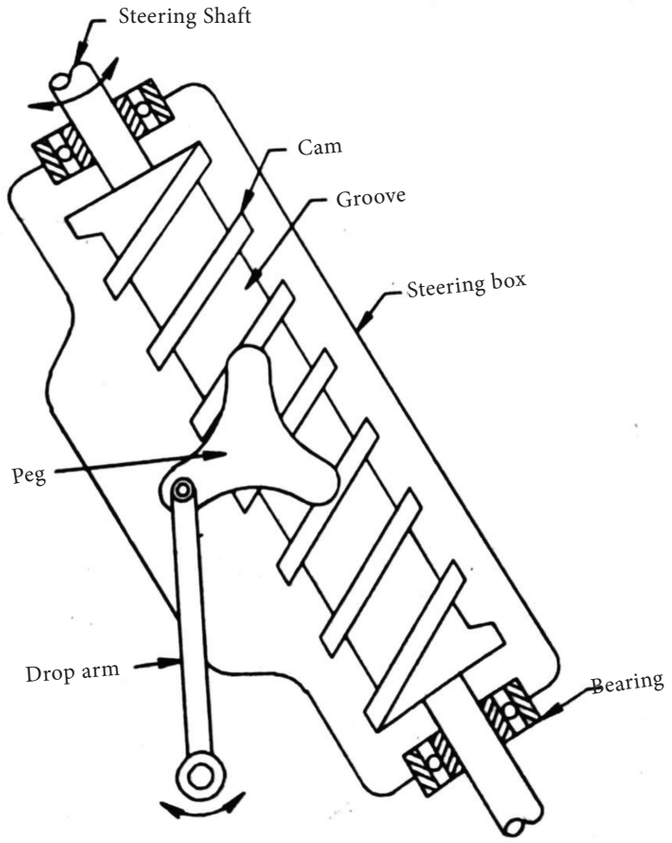

Figure 8.3.1.2 (b) Cam and peg type steering system

on its surface between its bearing and this shaft is known as a cam.

- An integral rocker arm and shaft is placed half-way along the cam. At the free end of the rocker arm a conical peg is fitted which engages the groove.

Working Principle

When the steering wheel and shaft rotate the camshaft, one side of the spiral groove screws the peg axially forward or backward, depending upon the direction of turning of the cam. This forces the rocker arm to pivot about its shaft axis and as a result a similar angular motion is transferred to the drop arm, which is attached to the shaft's outer end. Thus the road wheels are turns either left or right.

8.3.1.3 Worm and Sector Steering Gearbox

Construction

- The worm is firmly connected to the inner column of the steering shaft.
- Worm shaft is mounted on the housings with the help of two taper roller bearing makes the rotation of shaft easily.
- The sector gear is meshed with worm.
- The sector gears form a part of the rocker shaft in the steering gear box.

Working principle

- When the driver turns the steering wheel, the worm will turn and turns the sector gear. The rotary motion of

BAE_ENG_Chapter_08.indd 150 01/11/2022 11:55:58 AM

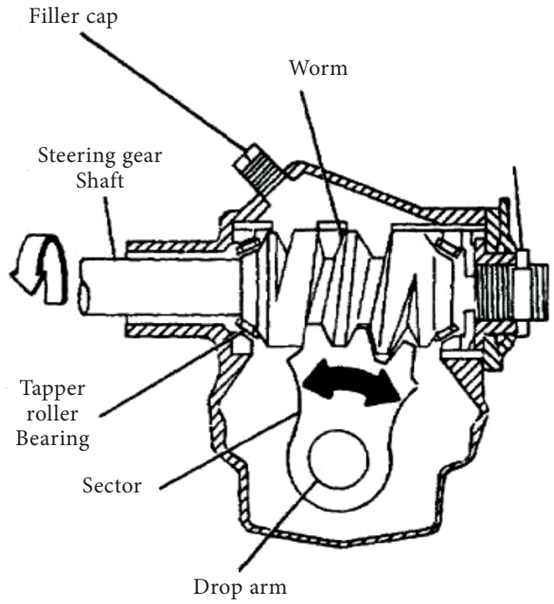

Figure 8.3.1.3 Worm and sector steering box

the steering wheel is converted into angular motion of the sector gear.

- The drop arm attached to the sector is also oscillated and through the steering linkages, the wheel is turned to the required degrees in the required direction.

8.3.1.4 Recirculating ball type steering gear box

It consists of a worm at the end of a steering rod. A nut is mounted on the worm with two sets of balls in the grooves of the worm, in between the nut and the worm. The balls reduce the friction during the movement of the nut on the worm. The nut has a number of teeth on the outside, which mesh with the teeth on a worm wheel sector, on which is further mounted the drop arm. When the steering wheel is turned, the balls in the worm roll in the grooves and cause the nut to travel along the length of the worm. The balls, which are in 2 sets, are recirculated through the guides. The movement of the nut causes the wheel sector to turn at an angle and actuate the link rod through the drop arm, resulting in the desired steering of the wheels.

8.4 Power steering

- In medium and heavy commercial vehicles, the driver has to put lot of physical effort to turn the vehicle. If the driver continuously drives the vehicle for longer duration, then the driver will be very tired.
- In order to reduce the steering effort by the driver for easy turning, an energy source that aids the driver in turning the wheels is called as power

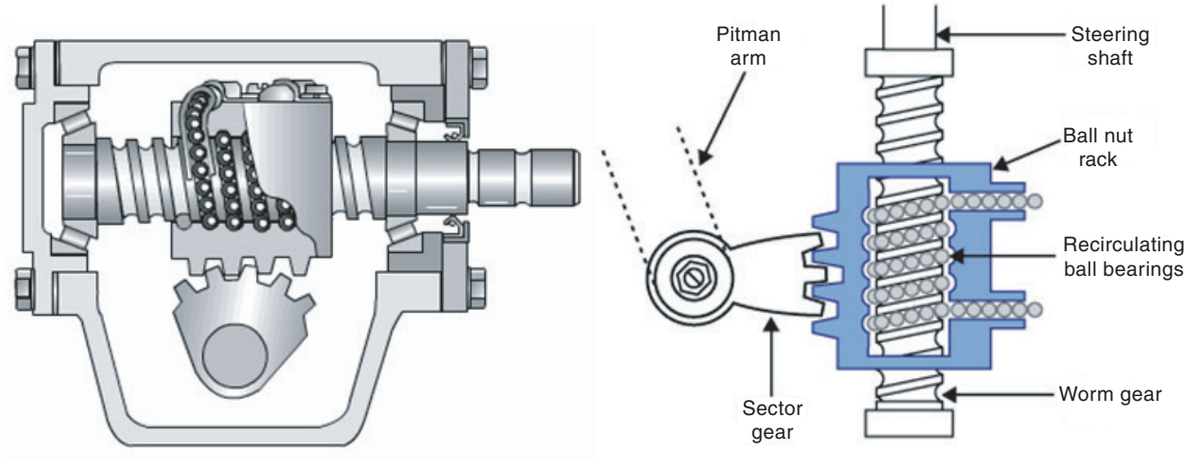

Figure 8.3.1.4 Recirculating ball type steering gear box

BAE_ENG_Chapter_08.indd 151 01/11/2022 11:55:59 AM

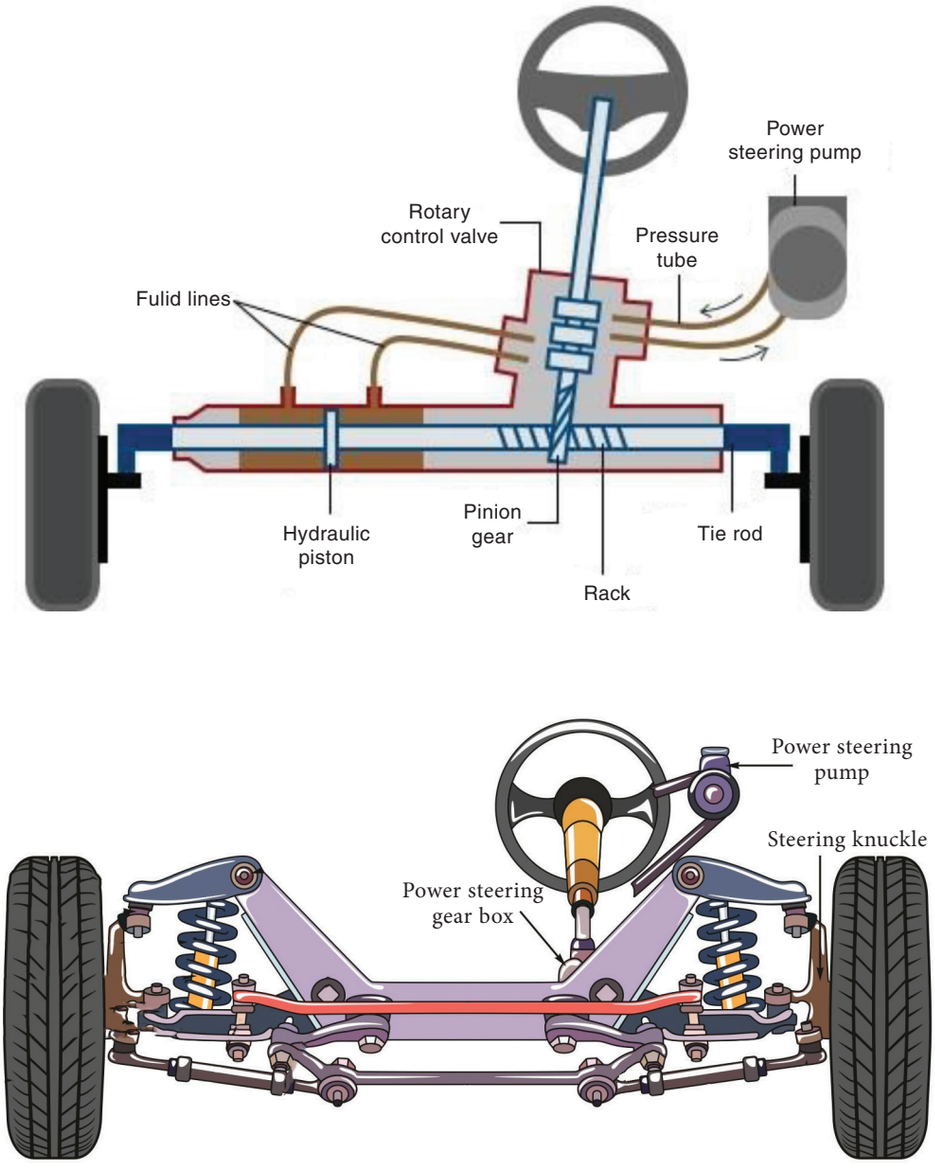

Figure 8.4 Power steering

steering system. Most automotive power steering system are hydraulic.

- A pump supplies high pressure fluid when the driver turns the steering wheel. This provides 80% of the required steering effort and the remaining 20% is by driver's physical effort.

Types of Power steering

1. Integral type
2. Linkage type

8.5 (a) Reversible Steering

- Steering gear is said to be reversible if the deflection of steered wheel due to road surface is transmitted through steering linkages and steering gears to the steering wheels.

(b) Irreversible Steering

- Steering gear is said to be irreversible if the deflection of steered wheel due to road surface is not transmitted

BAE_ENG_Chapter_08.indd 152 01/11/2022 11:55:59 AM

through steering linkages and steering gears to the steering wheels.

8.6 Steering play

- The position of the steering wheel may change with the vibrations in the wheels, result in directional instability of vehicle. To avoid this, the steering wheel should be set to be free to rotate to a small degree and this play is called as steering free play.

8.7 Steering ratio

- The ratio between rotation of steering wheel to that of the turning angle of the stub axle is called as steering gear ratio. Example 360˚ : 36˚(ie) 10 : 1.

8.8 Turning radius

- Turning radius is the smallest radius takes place when the vehicle takes a turn

DO YOU KNOW?

- Roads were first made for bicyclists, not cars.



- The first cars did not have steering wheels. They were operated by a lever.

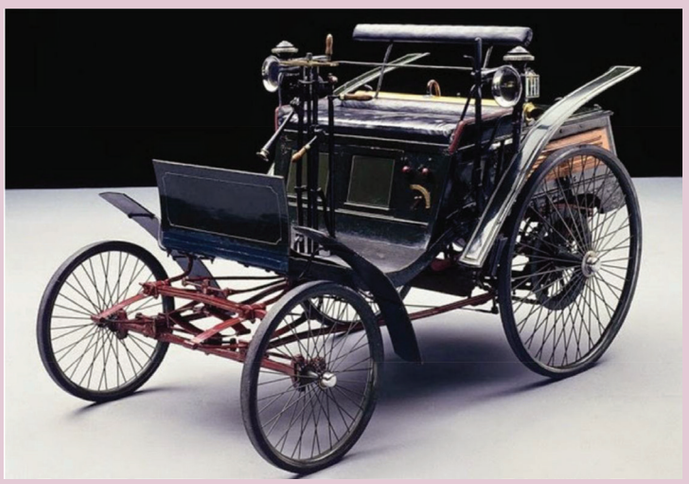

BAE_ENG_Chapter_08.indd 153 01/11/2022 11:56:00 AM

- The first windshield wipers were hand-operated.



- The first car to use a rear-view mirror was driven by inaugural Indy 500 winner Ray Harroun in 1911 to see the cars catching up behind him.



BAE_ENG_Chapter_08.indd 154 01/11/2022 11:56:00 AM

8.9 Wheel Alignment

- It refers to the angular relationship between the front wheels and parts attached to it with that of car frame. Wheel alignments ensure that all four wheels are consistent with each other and are optimized for maximum contact with the surface of the road.

8.9.1 Aim of wheel alignment

1. To turn the steered wheel easily and to ensure vehicle directional stability.
2. To reduce the tyre wear to a minimum.

8.9.2 Angles in wheel alignment

1. Caster Angle
2. Camber Angle
3. King pin inclination
4. Toe-in and Toe-out

8.9.2.1 Caster Angle

The angle between the king pin centre line (or steering axis) and the vertical axis, when viewed from the side of the vehicle, is called the Caster angle. Caster angle is about 2° to 3°. As shown in figure 8.9.2.1 (a), (b), (c).

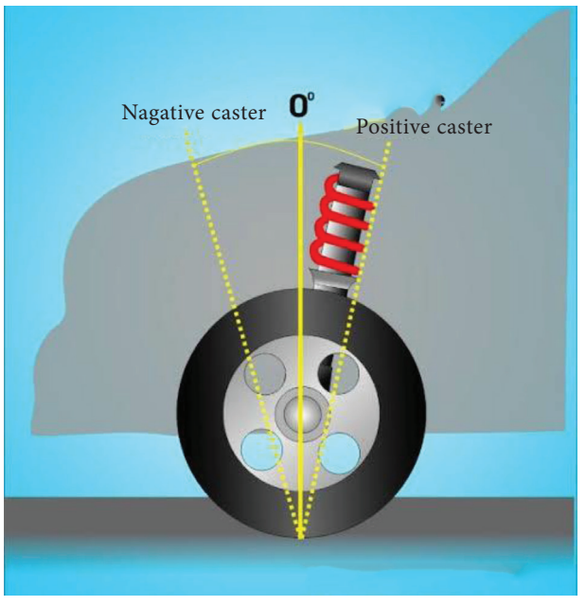

Figure 8.9.2.1 (a) Caster angle

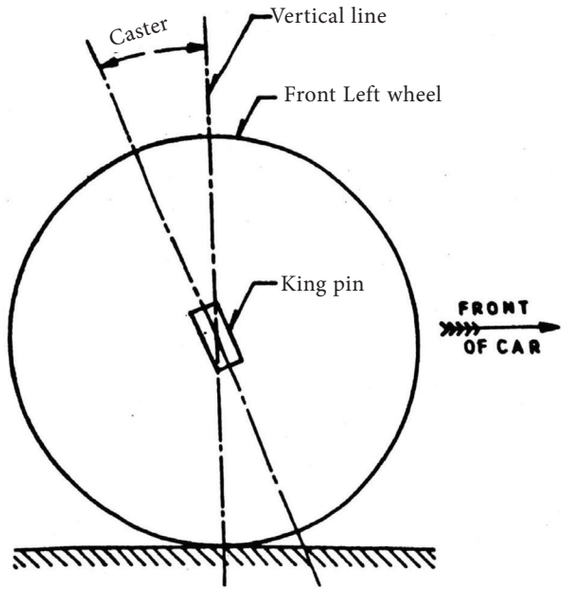

Figure 8.9.2.1 (b) Caster angle

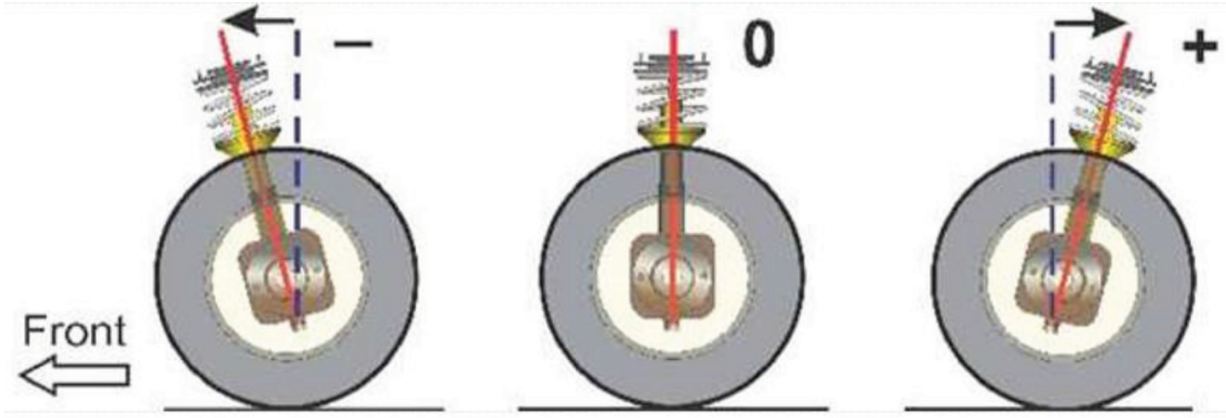

Figure 8.9.2.1 (c) Caster angle

BAE_ENG_Chapter_08.indd 155 01/11/2022 11:56:01 AM

Importance of Caster Angle

1. Positive Caster provides directional stability.
2. To prevent pulling of wheel on one side during braking
3. To reduce the tyre vibration

8.9.2.2 Camber angle

The angle between the centre line of the tyre to the vertical line when viewed from the front of the vehicle is known as Camber. It is approximately 1° to 2°. As shown in figure.

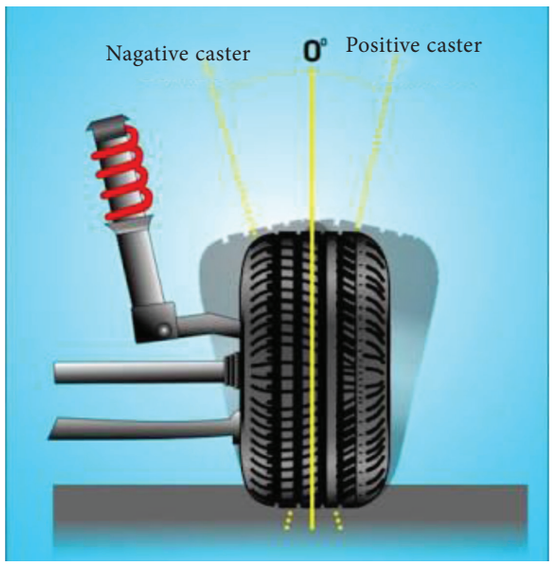

Figure 8.9.2.2 (a) Camber angle

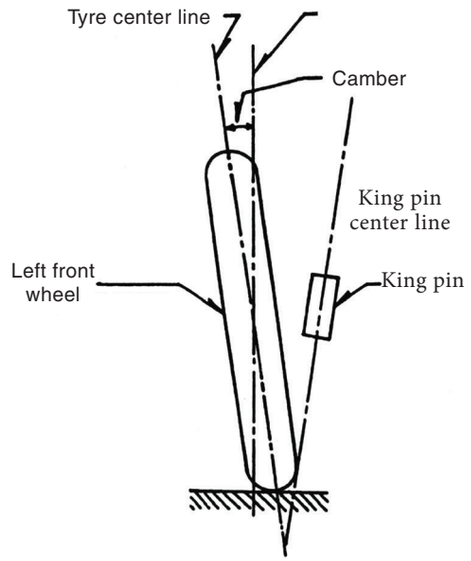

Figure 8.9.2.2 (b) Camber angle

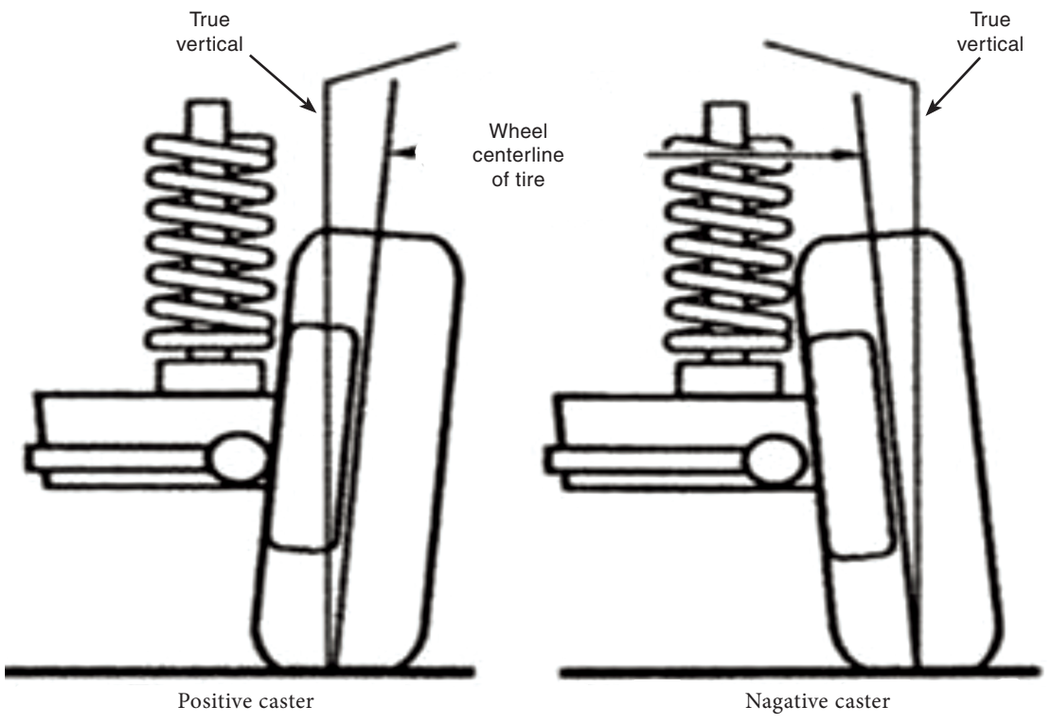

Figure 8.9.2.2 (c) Camber angle

BAE_ENG_Chapter_08.indd 156 01/11/2022 11:56:02 AM

Importance of Camber Angle

1. At the time of turning, camber angle ensures the ease of steering.
2. To reduce the tyre wear.
3. To reduce the load acting on the king pin and the wheel bearing due to weight of the vehicle.

8.9.2.3 King Pin Inclination

When the vehicle is viewed from front, the angle between the inclination of the king pin from the vertical axis is called the King pin Inclination. The inclination is normally kept 7° to 8°.

The reason for king pin inclination

1. It gives good road holding on turnings.
2. It reduces steering effort.
3. It reduces the load acting on the wheel bearing.

8.9.2.4 Toe-in and Toe-out

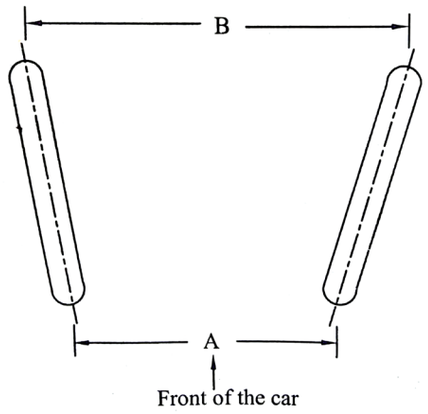

Figure 8.9.2.4 Toe-in

Toe-in

When viewed from the top, the distance between the front wheels at the front is less than the distance at the back is called Toe-in. Normally toe-in is up to 3 mm.

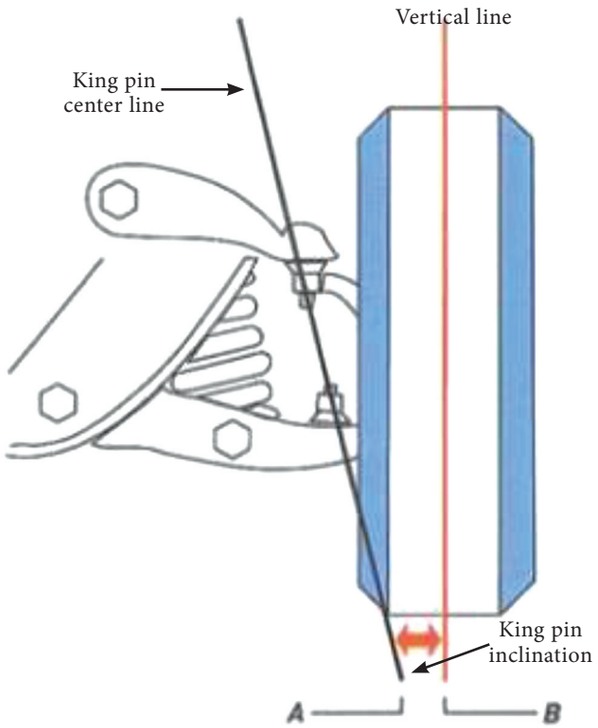

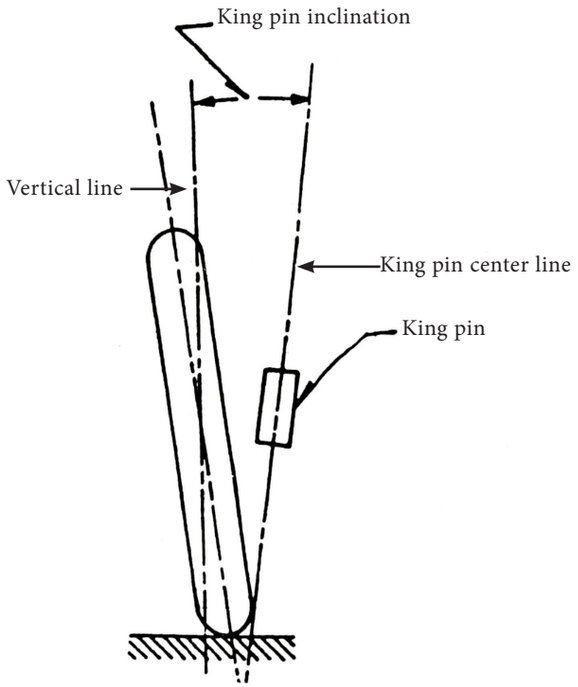

Figure 8.9.2.3 (a) & (b) King pin inclination

BAE_ENG_Chapter_08.indd 157 01/11/2022 11:56:03 AM

Toe-out

When viewed from the top, the distance between the front wheels at the front is more than the rear side is called toe-out

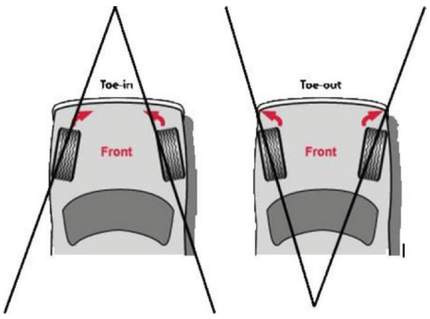

Figure 8.9.2.4 (a) Toe-in & Toe-out

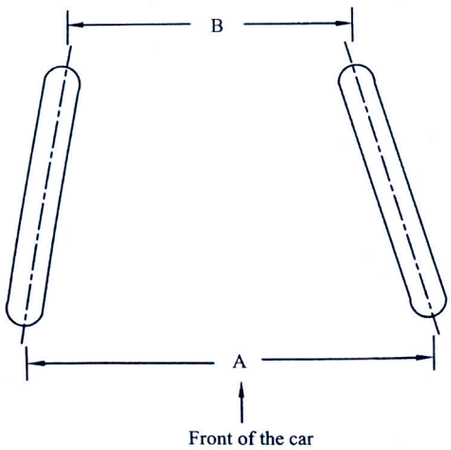

Figure 8.9.2.4 (b) Toe-out



- An airbag takes only 40 milliseconds to deflate.





BAE_ENG_Chapter_08.indd 158 01/11/2022 11:56:03 AM

8.9.3 Effects of improper wheel alignment

1. Vehicle will roll over due to centrifugal force acting at the time of turning
2. Wheels are subjected to vibration
3. Increases the tyre wear
4. Reduce the tyre life
5. Hard steering
6. Vehicle pull on one side

8.10 Difference between Mechanical Steering and Power Steering

Sl No.	Mechanical Steering	Power Steering
1	Mechanical steering is a system in which Mechanical force is used for steering.	Power steering is a system that helps in steering the wheels using some source of power viz Hydraulic, Electric, Air.
2	Resistance to wheel movement is more.	Resistance to wheel movement is less
3	Widely preferred for Low weight vehicles.	Ease of steering in Comparatively heavy weight vehicles.
4	Steering wheel and column, a Mechanical gearbox and pitman arm or a rack and pinion assembly, linkages; steering knuckles and ball joints, and 4. the wheel spindle assemblies.	A hydraulic pump, fluid reservoir, hoses, lines; and either a power assist unit mounted on, or integral with, a power steering gear assembly.
5	Does not Absorbs road shocks.	Absorbs road shocks.
6	Efforts required for steering is high.	Efforts required for steering is less.
7	Very difficult to control directional at the time of emergency and directional stability is difficult to achieve.	Greater safety and controllability under emergency situation.

8.11 Front Axle

Front axle carries the weight of the front part of the vehicle. Front axle includes axle beam stub axles with brake assembly, track rod and stub axle arm to steer and brake the vehicle. To accommodate front engine and to provide stability and safety, the centre portion of the axle is dropped. It is called as front axle.

Construction

In light vehicles, front axles are tubular in section and in heavy commercial vehicles, the front axles are made up of I cross section. In both the ends, stub axles are connected with front axle by means of kingpin and steering track arm.

BAE_ENG_Chapter_08.indd 159 01/11/2022 11:56:03 AM



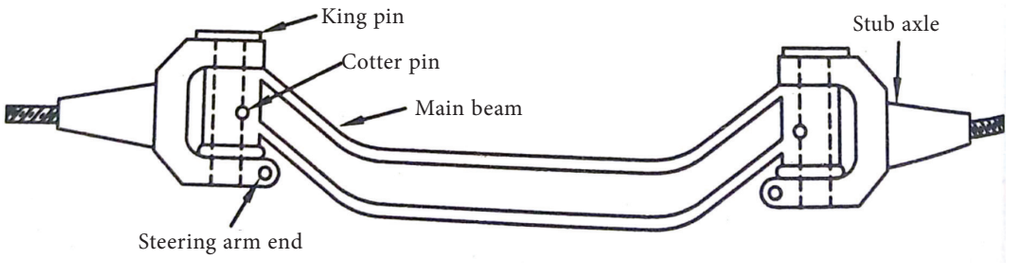

Figure 8.11 Front axle

8.11.1 Types of Front axle

1. Dead Axle
2. Live Axle

8.11.1.1 Dead axle

- It is a just dummy axle. It having no connections with engine. It has sufficient rigidity and strength to transmit the weight of the vehicle from the steering and brake system without differential and axle shaft.

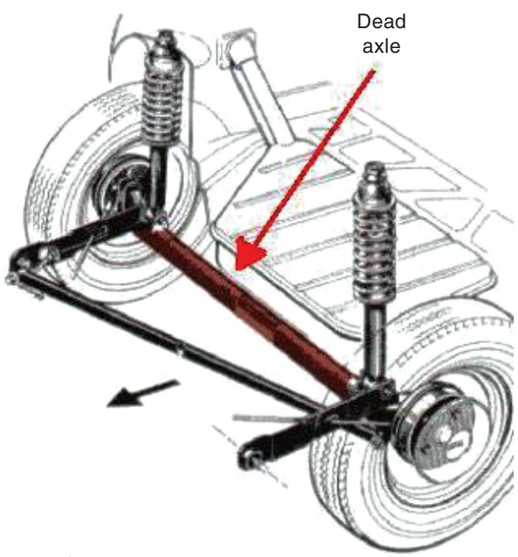

8.11.1.2 Live axle

- Live axle is the one through which power is transmitted to the wheels by means of differential and axle shaft. In case of front wheel drive or in all wheel drive, the front axle will act as live axle.

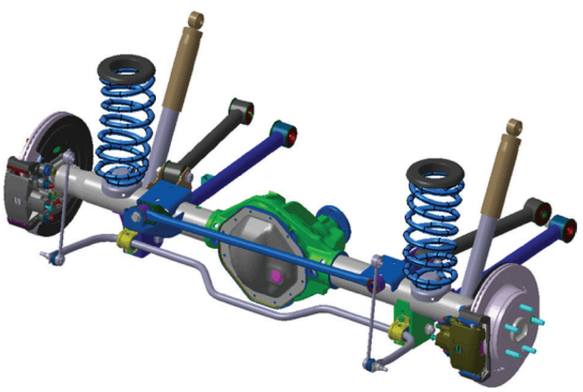

8.12 Stub Axle

- Stub axle is a short axle. Stub axle are connected to the front axle by means of king pin. The front wheels are mounted on the stub axle.

BAE_ENG_Chapter_08.indd 160 01/11/2022 11:56:04 AM

- Stub axle is capable of limited angular movement about the kingpin for steering the vehicle.
- Stub axle helps to turn the vehicle at desired direction through steering linkage.

8.12.1 Types of Stub axle

Front axles are built according to four basic designs for attaching the steering knuckle to the beam. They are

1. Elliot type
2. Reverse Elliot type
3. Lemoine type
4. Reverse Lemoine type

1. Elliot axle

The Elliot type stub axle is shown in the figure 8.12.1 (a). The end of the axles are in the shape of a elliot. A king pin with cotter pin connects the stub axle. So the stub axle turns easily to and fro.

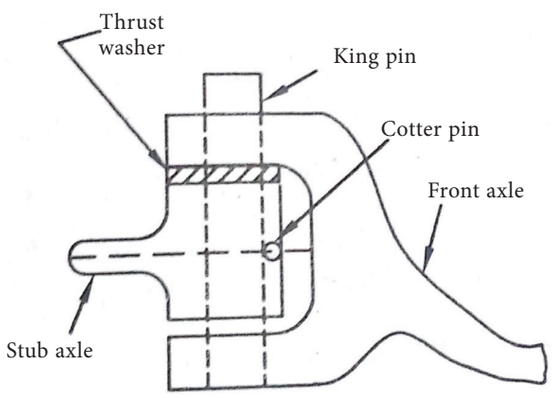

Figure 8.12.1 (a) Elliot type stub axle

2. Reversed Elliot axle

The reverse elliot type is shown in figure 8.12.1 (b) of the stub axle in the reversed Elliot shape. A king pin with cotter pin connects the stub axle. So the stub axle turns easily to and fro.

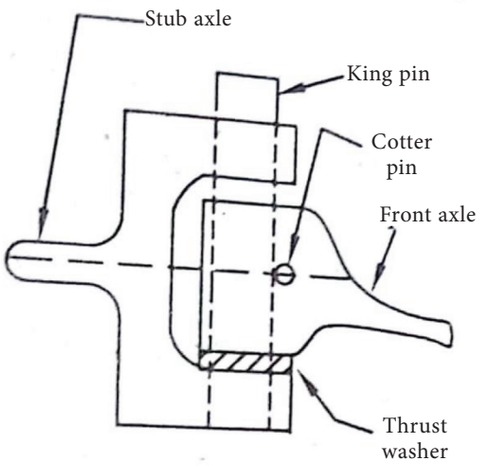

Figure 8.12.1 (b) Reversed elliot

3. Lemoine axle

Two spindles at right angles to each other, stub axle and axle center. Lemoine, a French axle and spring manufacturer designed this. In this design, pivot spindle extended up from the wheel spindle. Tends to raise the axle center above the wheel spindle, hence poorly suited to modern conditions, where low axle centres is preferred.

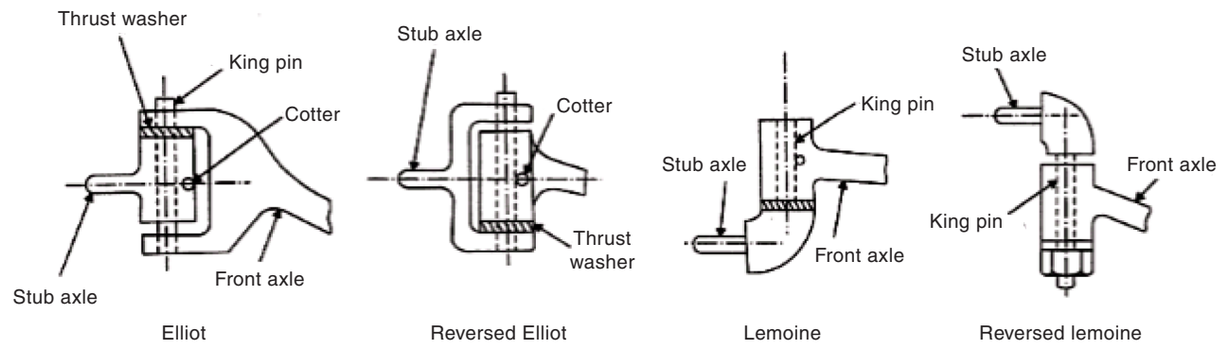

Figure 8.12.1 (a)

BAE_ENG_Chapter_08.indd 161 01/11/2022 11:56:04 AM

In this type, the stub axle is attached to the end of the axle by means of king pin. It is used in tractors. As shown in figure 8.12.1 (c).

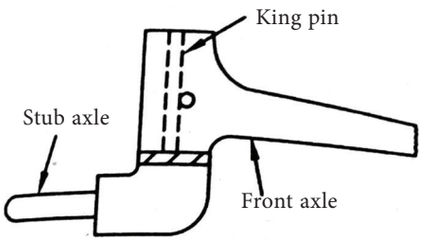

Fig 8.12.1 (c) Lemoine type

4. Reversed lemoine axle

Marmon, American passenger car manufacturer, reversed the arrangement and developed the design. A natural drop to the axle center, is an advantageous feature.

In this type, the stub axle is mounted on the top of the axle by means of king pin. It is used in tractors. As shown in figure 8.12.1 (d).

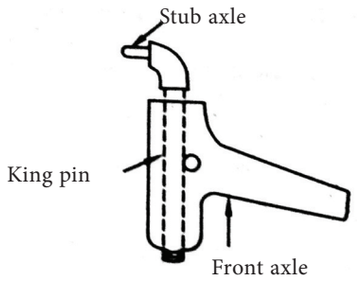

Fig 8.12.1 (d)

8.13 Troubleshooting, cause and remedy in a steering system

8.13.1 Excessive play in steering system

Sl. No.	Possible cause	Remedy
1	Loose / worn out steering gear (rack or box) mounting.	Tighten steering gear mounting bolts / replace mounting bushes.
2	Loose / worn out steering linkages.	Adjust or replace linkages.
3	Worn out of ball joints in steering system	Rectify / replace

8.13.2 Wheel Wobble

Sl. No.	Possible cause	Remedy
1	Mismatched tires or uneven tire pressure.	Inflate tyre upto recommended pressure
2	Unbalanced Wheel	Balance the wheel
3	improper camber angle and toe in	Check the wheel alignment and rectify

8.13.3 Hard Steering

Sl. No.	Possible cause	Remedy
1	Low inflation pressure in the tyres	Properly inflate tyre
2	Improper wheel alignment	Check and rectify the wheel alignment
3	Bend in the front axle	Rectify
4	Misalignment in chassis frame	Rectify
5	Broken / damage bearings and bushes in steering gearbox	Replace

BAE_ENG_Chapter_08.indd 162 01/11/2022 11:56:04 AM

8.13.4 Vehicle Pulling on one side

Sl. No.	Possible cause	Remedy
1	Uneven tyre wear	Tyre rotation
2	Improper brake adjustment	Check and adjust the brakes
3	Failure of damper / spring in one side	Replace the damper / spring

Student Activity

1. Students are advised to submit a report based on the visit to the nearest automotive workshop to study about various parts in steering system and its assembly procedure in vehicle.
2. Students are advised to submit a report on construction and working principle of steering system used in Modern cars with sketches based on the visit to the nearest Automotive workshop.

Glossary

1.	Alignment	–	ஒழுங்கமை
2.	Axle	–	அச்சு
3.	Kingpin	–	பிரதானபின் [சுழல் மூட்டுக்கம்பி]
4.	Camber angle	–	மேல் சாய்வு கோணம்
5.	Ball joint	–	பந்து கிண்ண இணைப்பு
6.	Steering	–	திசை திருப்பி
7.	Worm	–	திருகுருவப் பொருள்
8.	Power steering	–	விசைத் திருப்பி
9.	Irreversibility	–	மீளாத்தன்மை
10.	Stub axle	–	துணை அச்சு

References

1. S.K. Gupta, A Text Book of Automobile Engineering, S. Chand and Company, New Delhi, ISBN 978-93-837-4691-0, First Edition 2014, Reprint 2016.
2. Automobile Engineering, 2nd Edition, Sci Tech Publications (India) Pvt Ltd, 2011. Ramalingam. K.K.
3. Kirpal Singh, Automobile Engineering, Vol 1, Standard Publisher and distributor, ISBN – 13 – 978-8180141966

BAE_ENG_Chapter_08.indd 163 01/11/2022 11:56:05 AM

4. Jack Erjavec- Automotive Technology_ A Systems Approach -Delmar Cengage Learning (2009) ISBN-13: 978-1428311497
5. James D. Halderman, Automotive Technology, Principles, Diagnosis and service, fourth Edition, 2012, Prentice Hall, ISBN - 3: 978-0-13-254261-6
6. K.K.Jain and R.B.Asthana, Automobile Engineering, Tata McGraw-Hill Publishing Company Limited, New Delhi
7. R.K.Rajput, A Text Book of Automobile Engineering, Laxmi Publications, New Delhi.
8. A.K. Babu & Er. Ajit Pal Singh, Automobile Engineering, S.Chand Publishing, New Delhi
9. Internal Combustion Engines by V. Ganesan, Tata McGraw-Hill Education, 2004
10. Automotive Mechanics by William Crouse, Donald Anglin

Webliography

1. https://www.carsdirect.com/car-repair/essential-power-steering-parts-and-what-they-do
2. https://www.howacarworks.com/basics/how-the-steering-system-works
3. https://www.cars.com/auto-repair/glossary/steering-gearbox/
4. https://chestofbooks.com/crafts/cars/Motor-Truck/Steering-Gears-And-Fundamental-Principles-Of-Steering-Mechanisms-Part-2.html
5. http://www.auto-repair-help.com/auto_diagnostics/steering_feels_loose_and_sloppy.php
6. http://www.differencebetween.info/difference-between-power-steering-and-mechanical-steering

Evaluation

26AFT

PART - A

One mark questions

Choose the correct answer

1. During driving, the direction of vehicle is controlled by
   a. Steering system
   b. Brake system
   c. Engine
   d. Suspension system

2. In steering system, steering arm is connected to
   a. Steering wheel
   b. Drop arm
   c. Steering column
   d. Tie rod

BAE_ENG_Chapter_08.indd 164 01/11/2022 11:56:05 AM

3. The box in which steering gears are mounted is called as
   a. Suspension
   b. Steering gearbox
   c. Differential
   d. Steering geometry

4. How many types of steering gearbox are available?
   a. 3 b. 4
   c. 5 d. 8

5. In steering system, the component used to pull steering arm on one side and to push steering arm another side, is called as
   a. Steering shaft
   b. Steering gearbox
   c. Tie rod
   d. Stub axle

6. In power steering system, the percentage of amplification by means of hydraulic is
   a. 20 % b. 60 %
   c. 80 % d. 100 %

7. Which steering system is easy to handling
   a. Power Streeting
   b. Rack and Pinion
   c. Worm and Wheel
   d. Worm and Sector

8. The permissible play in the steering wheel is known as
   a. Steering alignment
   b. Steering ratio
   c. Steering play
   d. Turning radius

9. The allowable caster angle in degree is
   a. 2° to 3° b. 7° to 8°
   c. 10° to 12° d. 5° to 6°

10. The angle between the central axis of kingpin and vertical axis, when viewed from vehicle front, is known as
    a. Camber angle
    b. Caster angle
    c. King pin inclination
    d. Toe-in

11. Front axles are classified into _____ types
    a. 2 b. 4
    c. 5 d. 6

PART - B

Three mark questions

1. State the functions of a steering gearbox.
2. List out the type of steering gearbox.
3. What do you mean by steering play?
4. Define steering ratio.
5. What are the parameters are there in a wheel alignment?
6. Write short notes on king pin inclination.

BAE_ENG_Chapter_08.indd 165 01/11/2022 11:56:05 AM

PART - C

Five marks questions

1. Arrange the parts in a steering gear box.
2. Discuss the power steering system and state the types.
3. Explain camber angle with simple sketch.
4. State the problem arises, if wheel alignment is improper.
5. Explain the role of front axle. Classify the types of front axle.

PART - D

Ten mark questions

1. With the aid of neat sketch, explain the construction and working principle of rack and pinion steering gearbox.
2. Describe the construction and working principle of worm and sector type steering gearbox with the aid of necessary sketch.
3. Tabulate the difference between mechanical steering and power steering system.
4. State the reason and remedial step for any two problem that are caused in steering system.

BAE_ENG_Chapter_08.indd 166 01/11/2022 11:56:05 AM

UNIT 9

Chassis and Body

Contents

9.0 Introduction
9.1 Chassis Frame
- 9.1.1 Functions of the Chassis Frame
- 9.1.2 Types of Chassis Frame
  - 9.1.2.1 Conventional Frame
  - 9.1.2.2 Semi Integral Frame
  - 9.1.2.3 Integral Frame
- 9.1.3 Various Loads Acting on the Frame

9.2 Chassis
- 9.2.1 Construction of the Chassis
- 9.2.2 Parts Mounted on the Chassis Frame
- 9.2.3 Materials Used for the Chassis Frame

9.3 Important Dimensions of the Vehicle
9.4 Body
- 9.4.1 Functions of the Vehicle Body
- 9.4.2 Requirements of the Vehicle Body
- 9.4.3 Types of Vehicle Body
  - 9.4.3.1 Goods Vehicle Body
  - 9.4.3.2 Passenger Vehicle Body

9.5 Tinkering And Painting
- 9.5.1 Tinkering
- 9.5.2 Tools Used for Tinkering
- 9.5.3 Painting
- 9.5.4 Precautions to be Followed During Tinkering and Painting

QBW6D

Learning objectives

1. To make the student to understand about the need, purpose and types of Chassis frame, sub systems of chassis mounted on the chassis.
2. To make the student to understand on vehicle body, classification of vehicles.

BAE_ENG_Chapter_09.indd 167 01/11/2022 11:57:46 AM

9.0 Introduction

The various parts of the vehicle are mounted on the chassis frame. The chassis frame must strong enough to withstand total weight of the vehicle. The chassis frame carries engine, clutch, gear box, Propeller shaft, rear axle, suspension, steering gear box and brake. Frame is fixed with two longitudinal bars and four or five cross bars by rivet or bolts.

9.1 Chassis frame

- The skeleton of the vehicle is chassis frame.
- Chassis frames are made up of alloy steel and it is of high strength to make the rigid structure.
- Based on the construction, application, load capacity of the vehicle, the chassis frame is made up of different size and shape.
- Chassis frame forms the backbone of the vehicle.

9.1.1 Functions of the chassis frame

1. To withstand the weight of the vehicle, passenger and goods.
2. To form the base to mount the engine, suspension, steering and power transmission system.
3. To build the vehicle body on the chassis frame.
4. To withstand the reaction due to driving and braking force.
5. To absorb the ground reaction forces due to road undulations.
6. To withstand the static load and dynamic load of a vehicle.

9.1.2 Types of chassis frame

Chassis frame are broadly classified into three types, namely:

1. Conventional Frame
2. Semi Integral Frame
3. Integral or Unit Frame

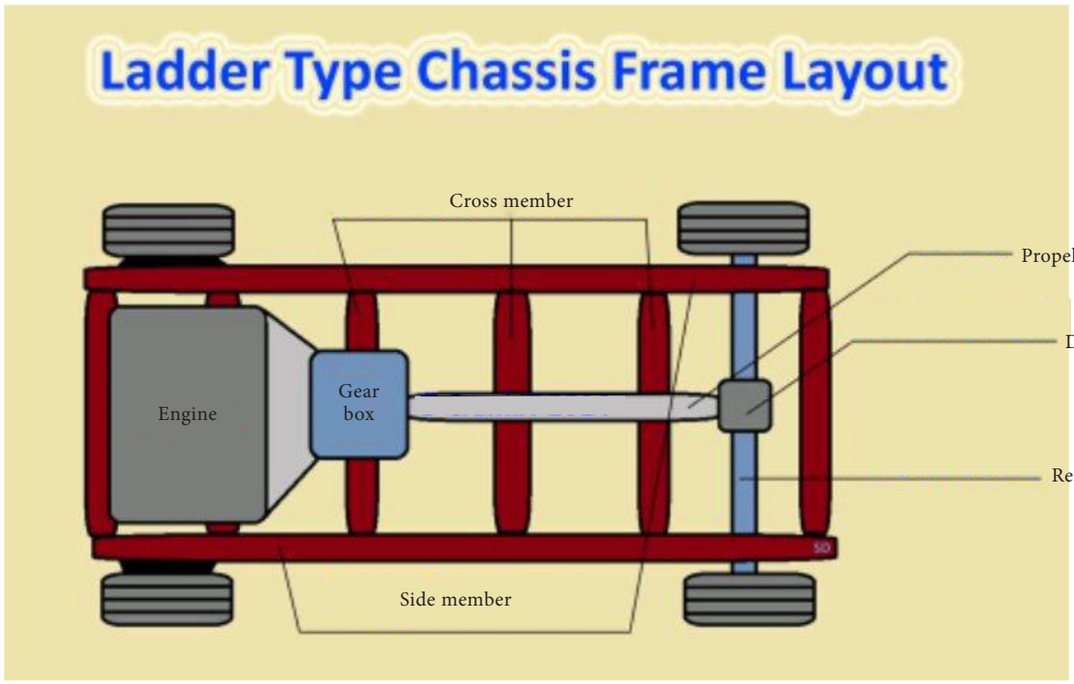

Figure 9.1 Ladder type chassis frame

BAE_ENG_Chapter_09.indd 168 01/11/2022 11:57:46 AM

9.1.2.1 Conventional Frame

Here the various components are attached to frame and the vehicle body are superimposed on it. The total frame is mounted on the wheel axle by means of springs. This arrangement makes the body completely isolated from the frame deflection. It is mostly used in heavy vehicles like buses, trucks etc.

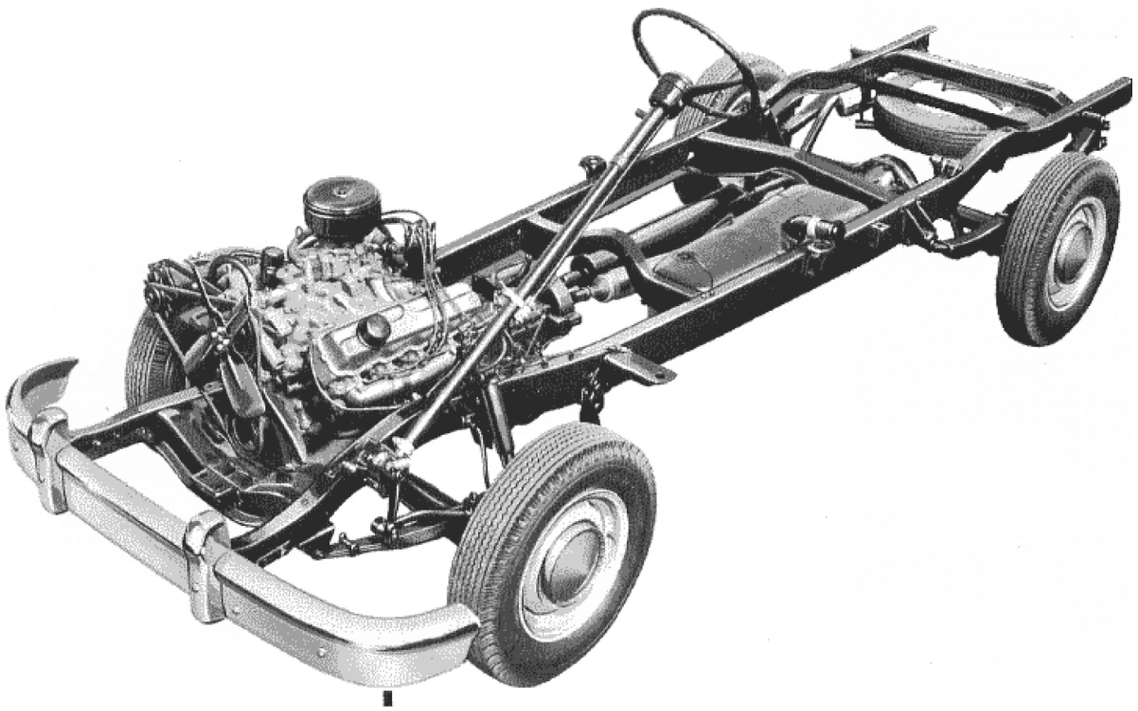

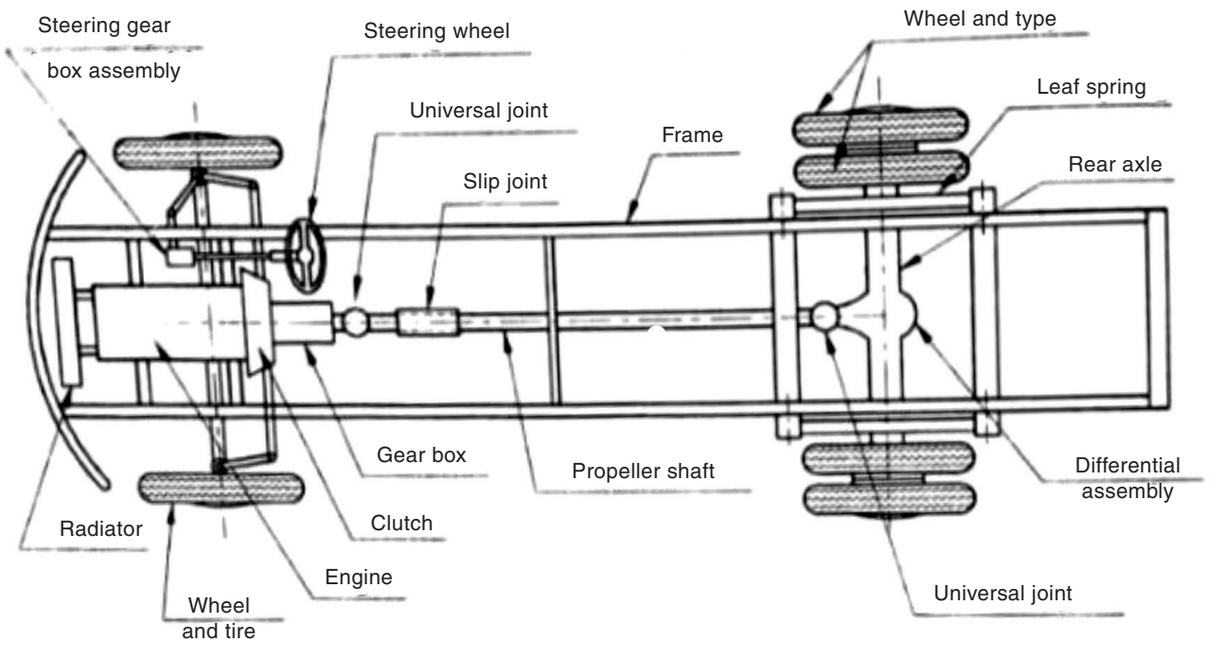

BAE_ENG_Chapter_09.indd 169 01/11/2022 11:57:47 AM

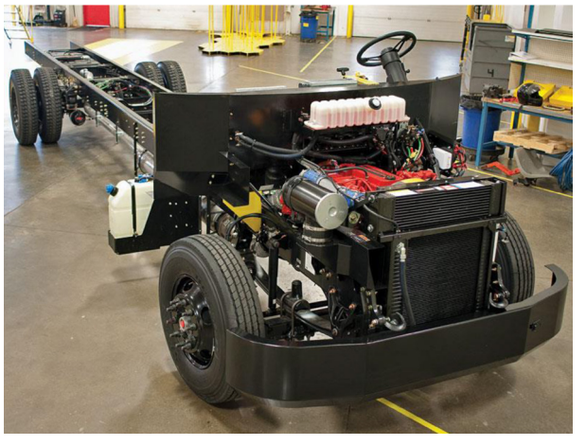

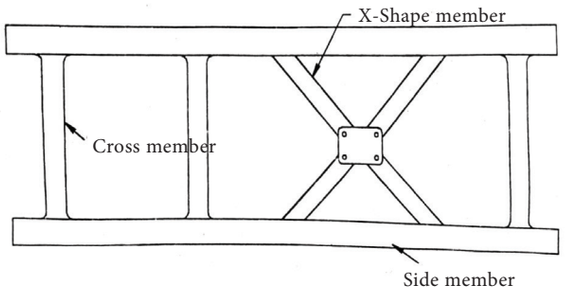

Figure 9.1.2.1 Conventional frame

9.1.2.2 Semi Integral Frame

This type of frames is made up of two or three sections and then it is integrated. The particular portion of the frame can be replaced if any damaged happens during accident instead of replacing the entire frame.



Figure 9.1.2.2 Semi integral frame

9.1.2.3 Integral Frame

In this type of construction, there is no separate frame. All the assembly units are attached to the body. Heavy side members of the frames are eliminated and cross members are combined with the floor of the body. The body of the vehicle gives a mounting for engine, transmission, suspension and other mechanical units. Weight of the vehicle is very much reduced and widely used in cars.



Figure 9.1.2.3 (a) Integral frame

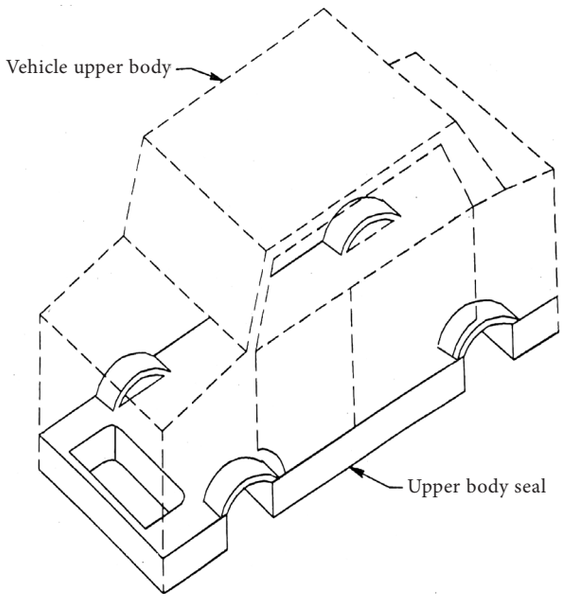

Figure 9.1.2.3 (b) Integral frame



Figure 9.1.2.3 (c) Integral frame

BAE_ENG_Chapter_09.indd 170 01/11/2022 11:57:49 AM

9.1.3 Various loads acting on the frame

1. Vertical loads when the vehicle comes across a bump or pit and road undulation
2. Engine torque and braking torque
3. Loads due to road camber, side wind, cornering force, Centrifugal force while taking a turn.
4. Aerodynamic forces at considerable speed
5. Weight of different components like engine, transmission, passengers, fuel tank, seats, exhaust acting at mounting points
6. Sudden impact loads during a collision

9.2 Chassis

In an automobile, all the subsystems excluding the body is called as Chassis.

9.2.1 Construction of the chassis

The layout of various subsystems is shown in the figure.

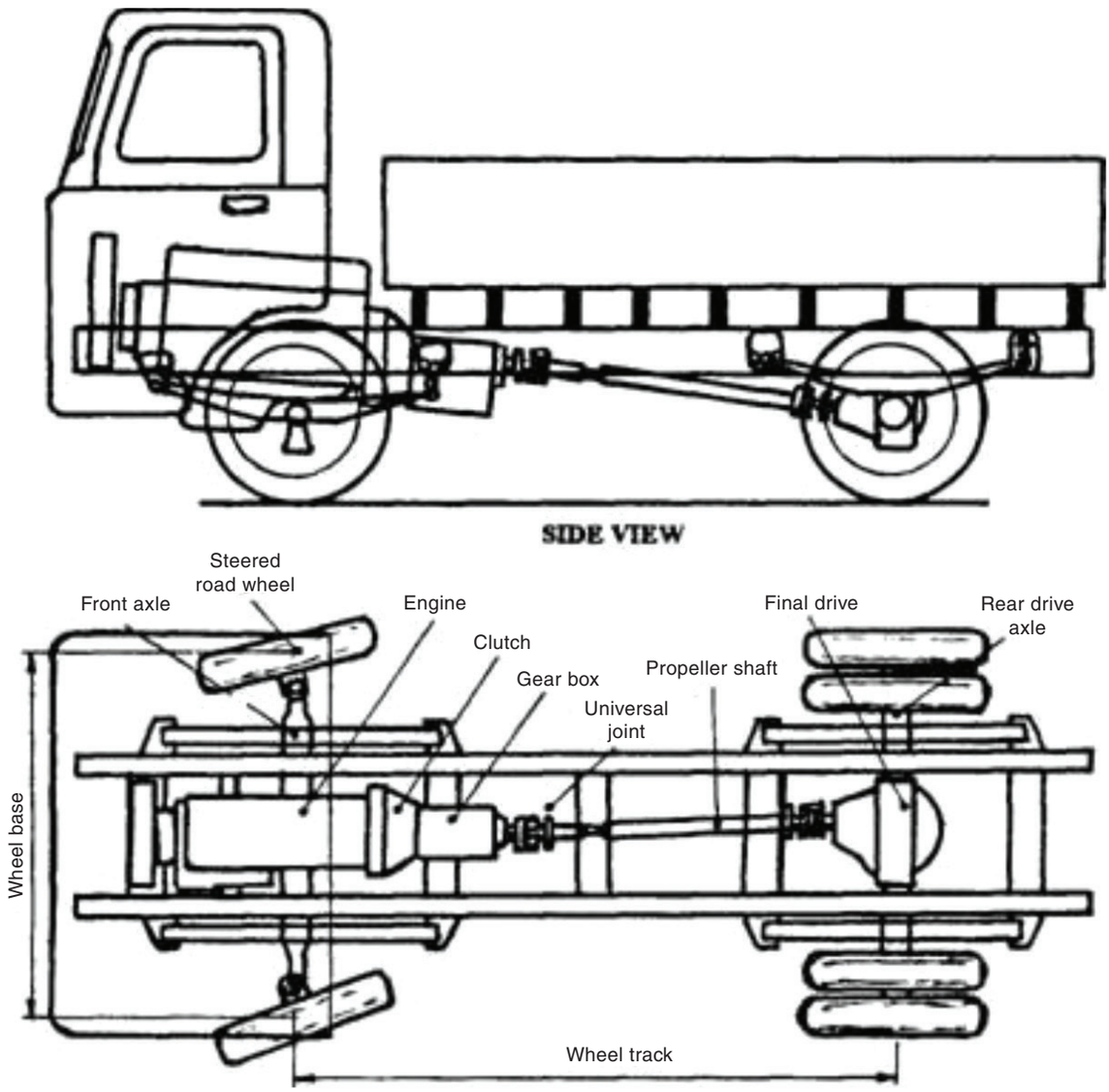

Figure 9.2.1 (a) Construction of the Chassis

BAE_ENG_Chapter_09.indd 171 01/11/2022 11:57:50 AM

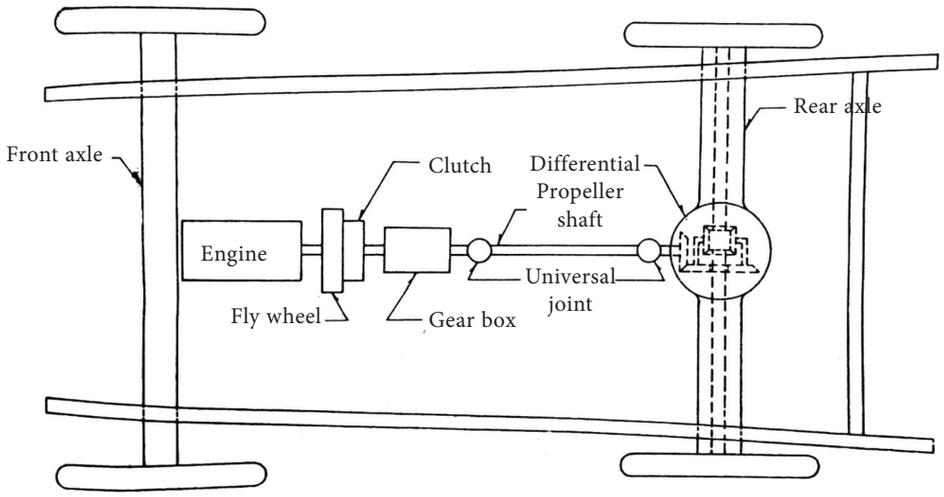

Figure 9.2.1 (b) Construction of the Chassis

In the present manufacturing of the vehicle, the body is separately fabricated and it is mounted over the chassis. The importance subsystems that are connected in the chassis frame includes engine, clutch assembly, gear box, suspension system, wheels and tires, steering system, brake, fuel tank, electrical system etc.

9.2.2 Parts mounted on the chassis frame

1. Chassis frame

Chassis frame is fixed with two longitudinal bars and four or five cross bars by rivet or bolts. Quality alloy steel is used to withstand the total weight of the vehicle. It is considered as the backbone of the vehicle.

2. Engine

The driving power of the vehicle is provided by the engine. It converts the chemical energy in the fuel into mechanical energy to propel the vehicle. The engine power is transmits to road wheel through clutch, gear box and rear axle.



3. Clutch

The main function of the clutch is to take up the drive smoothly from the engine and to release or disengage whenever desired. It is fixed in between engine and gear box. To avoid broken of gears in the gear box.



BAE_ENG_Chapter_09.indd 172 01/11/2022 11:57:50 AM

4. Gearbox

According to operating conditions, to provide the necessary torque variation from the engine to the drive wheels, gear box is used. Also, to reverse the direction of the vehicle whenever required.

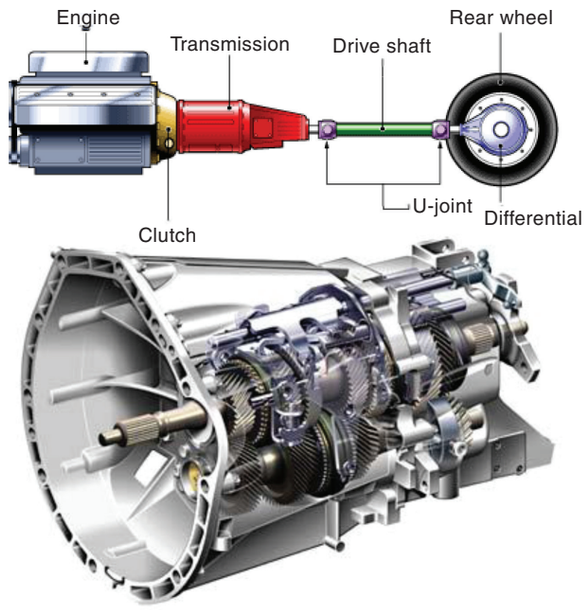

5. Suspension system

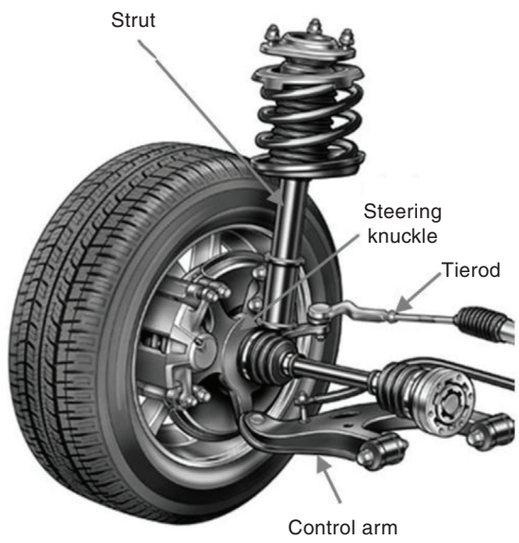

Suspension system is used to prevent the road shock and to enhance ride comfort to the passenger and to the various vehicle components. They also preserve vehicle stability under various road conditions. It is fixed in between axle and chassis frame.

6. Brake system

Brake systems are used to stop the vehicle, or to reduce the vehicle speed, and to prevent rolling of the vehicle when travelling on inclined surface. Brakes are fixed in each four wheels. Its functions by using mechanical linkage, hydraulic power and air.



7. Steering system

Steering system is used to change the direction of the vehicle as desired by the driver. The steering systems helps in reducing the drivers work through mechanical advantage, to control the vehicle according to road condition and speed.

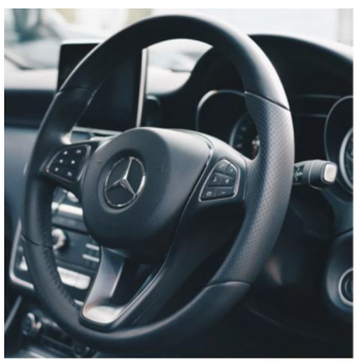

8. Electrical system

Electrical system includes ignition system lighting system, starting system,

BAE_ENG_Chapter_09.indd 173 01/11/2022 11:57:51 AM

charging system and other electrical accessories. Electrical energy for all the system is provided by the battery. Battery is known as heart of the electrical system.

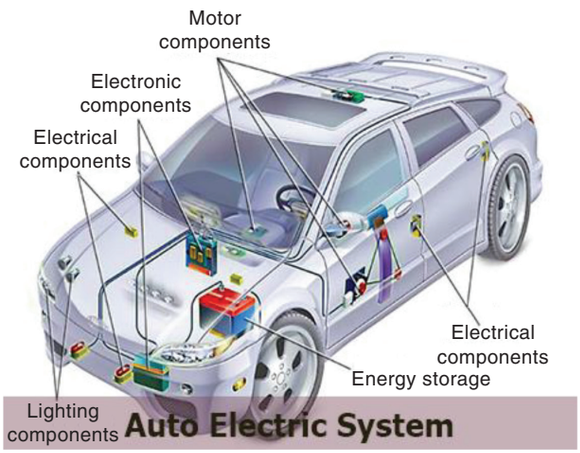

9.2.3 Materials Used for the Chassis Frame

Frame should be extremely rigid and strong so that it can withstand shocks, twist, stresses and vibrations when vehicle is moving on road. The chassis frame should be made from high strength materials. The following materials are widely used for the manufacture of the chassis frame.

1. Mild sheet Steel
2. Carbon sheet Steel
3. Sheet Nickel Alloy

The chemical composition of nickel alloy steel is

Carbon – 0.25% - 0.35%

Manganese – 0.35% - 0.75%

Silicon – 0.30%

Nickel – 3%

Phosphorus – 0.05%

Sulphur – 0.5%

9.3 Important dimensions of the vehicle

1. Wheel base

- Wheel base is the distance between the centres of the front and rear wheels.

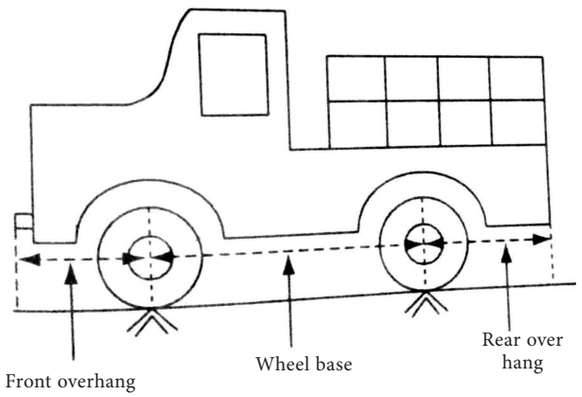

Figure 9.3.1 Wheel base

2. Wheel track

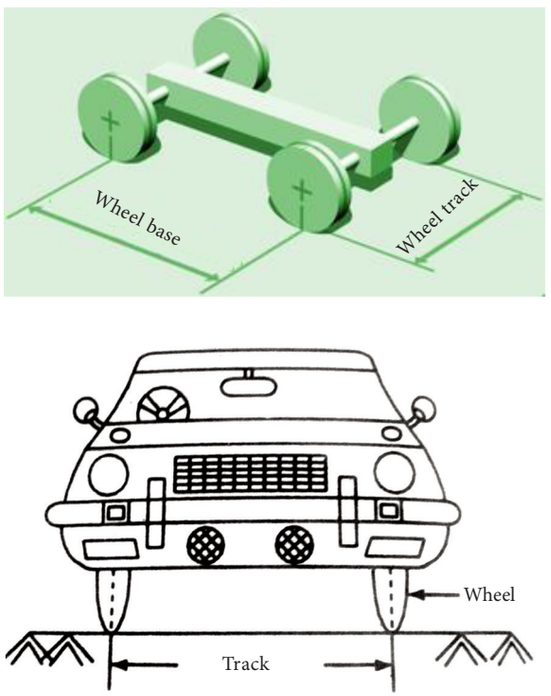

Figure 9.3.2 Wheel track

BAE_ENG_Chapter_09.indd 174 01/11/2022 11:57:51 AM

- Wheel track is the distance between both the front wheels or rear wheels measured from the centres of tyres.

3. Front over hang

Front over hang is the distance between the front bumper and centre of front axle.

4. Rear over hang

Rear over hang is the distance between the rear bumper and centre of rear axle.

5. Over all width

The distance between the two side members is called over all width.

6. Over all height

It is the amount of space between the ground surface to the upper side of the vehicle body is called over all height.

7. Over all length

The distance between the centre of front and rear bumper is called as over all length.

8. Ground Clearance

- Ground clearance is the amount of minimum space between the road surface and the underside of the chassis.

9.4 Body

Body is the superstructure for all vehicles. It may either constructed separately and bolted to the chassis or manufactured integral with the chassis.

- The chassis and body make the complete vehicle.
- A body consists of windows and doors, roof, luggage compartment, passenger seats etc.
- A body should be designed such that it will against the air resistance, gradient resistance and rolling resistance.

9.4.1 Functions of the vehicle body

1. Vehicle body protects the passengers and the goods from sunlight.
2. Prevent the dust from entering into the vehicle.
3. Protects the passenger from rainfall.

9.4.2 Requirements of the vehicle body

1. Weight of the body should be as minimum as possible.
2. It should have minimum number of components.
3. It should have reasonable fatigue life.

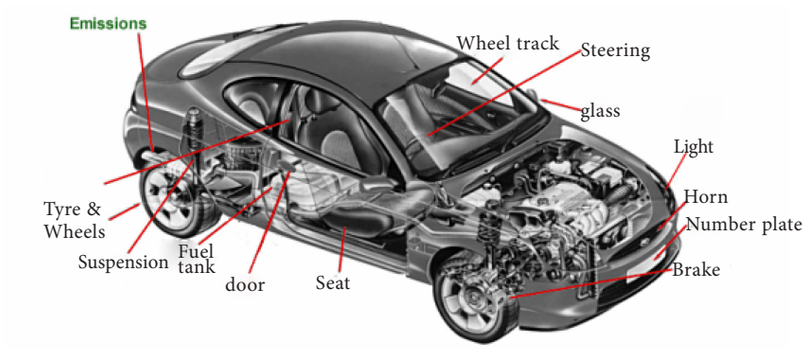

Figure 9.4 Body

BAE_ENG_Chapter_09.indd 175 01/11/2022 11:57:51 AM

4. It must provide adequate space for both the passenger and the luggage.
5. It should create minimum vibration during running.
6. Weight and stresses induced in the body should be distributed evenly to all portions.
7. It should be able to scope with impact loads of reasonable magnitude and safe guard the passengers during accidents.
8. The shape of the body should be such that the air resistance is minimum
9. It is easy to manufacture as weIl as cheap in cost.
10. It should be easy to maintenance.

9.4.3 Types of vehicle body

Vehicle bodies are classified into two types namely

1. Goods vehicle body
2. Passenger vehicle body.

9.4.3.1 Goods vehicle body

This type of vehicle bodies is used for transportation of goods. Based on the nature of the goods transported, Engine horsepower, load carrying capacity, the vehicle bodies are designed.

9.4.3.2 Passenger vehicle body

This type of vehicle bodies is used for transportation of passengers. Based on the number of passengers, level of luxury, engine horsepower, the vehicle body is designed.

The various types of vehicle bodies are shown in 9.4.3 table.

Passenger Transport

a. Small car bodies up to six seat capacity.
b. Medium car bodies up to ten seat capacities.
c. Mini bus Bodies.
d. Large bus body for common and Luxurious transport.
e. Railway coach bodies.
f. Three Wheeled Bodies

Vehicle body classifications

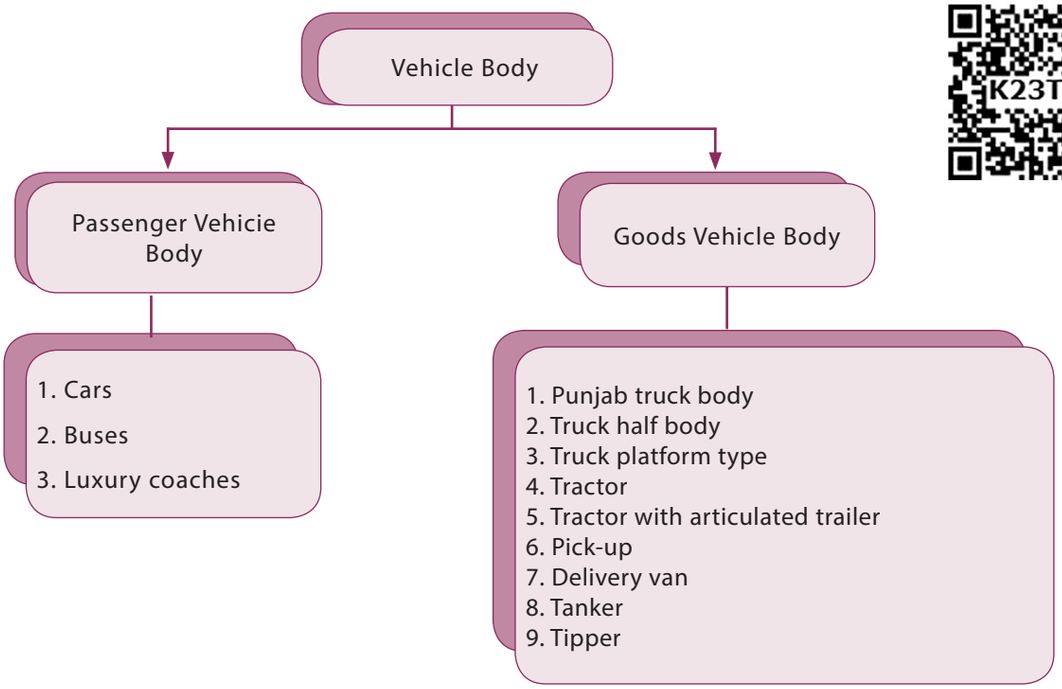

Table 9.4.3 Vehicle body classifications

BAE_ENG_Chapter_09.indd 176 01/11/2022 11:57:51 AM

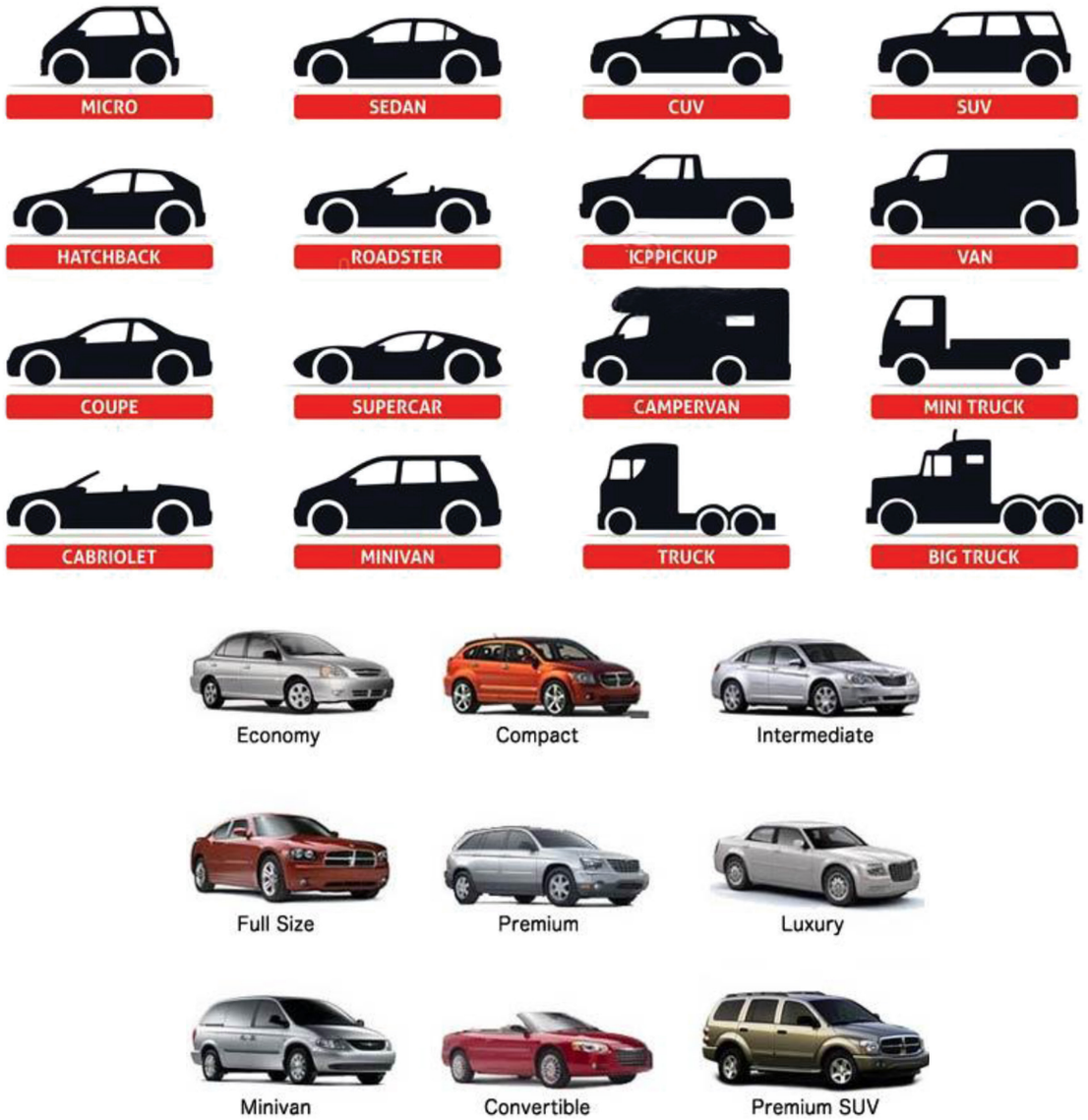

Figure Types of vehicle body

Vehicle type	Other names	Examples of cars in the category
Small car	Hatchback, micro-car, city cars, small family car	Toyota Carolla, Hyundai i10, Mazda2, Nissan Micra, Ford Fiesta
Medium car	Sedan, medium family car	Opel Astra, Ford Fiesta, Hyundai i20
Large car	Saloon, family car	Toyota Camry, Ford Falcon, Audi A6, Ford Mondeo
Sports car	Roadster	Honda CR-V, Mazda MX5, Audi TT
People Mover	Mini van	Toyota Tarago, Chrysler Voyager,
Compact SUV	Mini SUV, Mini 4x4	Hyundai i35, BMW X1, Skoda Yeti
Medium SUV	Large 4x4	Toyota RAV4, Ford Kuga, Mitsubushi Outlander, Jeep Wrangler, Audi Q3
Large SUV	Large 4x4	Toyota Land Cruiser, Mitsubishi Pajero, Hyundai Santa Fe, land Rover Range Rover

BAE_ENG_Chapter_09.indd 177 01/11/2022 11:57:52 AM

Goods Transport

a. Truck Bodies
b. Tanker Bodies
c. Minivan Bodies
d. Medium load Carrying vehicle
e. Heavy load carrying Bodies
f. Three wheeled Bodies.
g. Tipper bodies.



9.5 Tinkering and painting

9.5.1 Tinkering

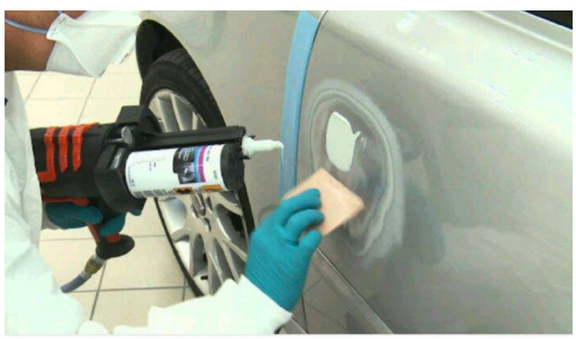

Figure 9.5.1 Tinkering

Tinkering is performed to remove dents, scratches, chemical erosion, environmental erosion occurred on the exterior surface. This will improve the aesthetic appearance of the vehicle.

9.5.2 Tools used for tinkering

1. Gas and Arc welding unit
2. Alloy steel sheets
3. New chassis sub frame to be replaced
4. Sheet metal cutter
5. Spray painting gun
6. Required matching colour
7. Thinner
8. Emery sheet
9. Cleaning clothes
10. Patti and scrapper
11. Wood hammer (or) mallet

9.5.3 Painting

Painting on vehicle bodies are used for both surface protection from corrosion and decoration purposes.

BAE_ENG_Chapter_09.indd 178 01/11/2022 11:57:52 AM



Figure 9.5.3 Painting

Steps followed in painting

1. Preparation
2. Primer
3. Base coat
4. Clear coat
5. Polishing

- Wash the area to be painted with plain water and soap and scrub off any deposits with a micro fibre cloth. Allow the surface to be dried.
- Remove badges, trims, door handles, side-indicator lamps, headlights, windscreen etc that will hinder the paint job using right tools.
- Remove the dents using wooden hammer.
- Finish doing the dent work for the area to be painted. Use emery sheet to clean any rust on the area to be painted. If any new metal is welded, then ground the weld seam. Treat rusted areas with corrosion protection spray (optional).
- Fill in small imperfections with body filler, and sand back the surface with smooth grades of emery paper, until the surface is smoothed out.
- Mask the surrounding area with Brown paper.
- Degrease the surface to be painted using a degreaser and wipe the surface free of dust.
- Apply the primer and allow it to dry.
- Apply 2 - 3 base coat with the required matched colour evenly on the surface using spray gun. Ensure complete dryness between each coat.
- Apply the 1 – 2 clear coat to form a glossy and transparent coating and allow it to dry.
- Polish the painted surface.
- Inspect for any paint run and gently remove these with thinner.
- Finally remove all masking from the car.
- Then wash it thoroughly and wax when dry.

9.5.4 Precautions to be followed during tinkering and painting

1. Before tinkering, the vehicle must be raised to the required height by jack and firmly parked.
2. Axles and wheels in the vehicle should be removed
3. Remove the fuel tank, lubrication oil sump and other fluids in the vehicle.
4. All electricity circuits must be securely grounded.
5. Clean the vehicle with compressed air
6. Grease and Wax sticking on the vehicle surface should be cleaned using degreaser
7. The area to be painted should be washed and dried thoroughly.

BAE_ENG_Chapter_09.indd 179 01/11/2022 11:57:52 AM



- It takes 15 ml of gasoline to start the average vehicle.



- It takes about 25 hours to build a car, a whopping 10 hours of that 25 is spent painting the car.





Student Activity

1. Students are advised to submit a report based on the visit at automobile body building shop on various chassis subsystems.
2. Students are advised to submit a report based on the visit at automobile body building shop on mounting body over the chassis frame and various mounting methods.

BAE_ENG_Chapter_09.indd 180 01/11/2022 11:57:52 AM

Glossary

1.	Chassis Frame	-	அடிச்சட்டம்
2.	Chassis	-	அடித்தளம்
3.	Body	-	மேற்கூடு
4.	Integral	-	ஒருங்கினைந்த
5.	Static Load	-	நிலைப்பளு
6.	Construction	-	கட்டுமானம்
7.	Wheel base	-	இருசு இடைத்தூரம்
8.	Resistance	-	தடை
9.	Gradient	-	சரிவு
10.	Immerse	-	மூழ்குவி

References

1. S.K. Gupta, A Text Book of Automobile Engineering, S. Chand and Company, New Delhi, ISBN 978-93-837-4691-0, First Edition 2014, Reprint 2016.
2. Automobile Engineering, 2nd Edition, Sci Tech Publications (India) Pvt Ltd, 2011. Ramalingam. K.K.
3. Kirpal Singh, Automobile Engineering, Vol 1, Standard Publisher and distributor, ISBN – 13 – 978-8180141966
4. Jack Erjavec- Automotive Technology_ A Systems Approach -Delmar Cengage Learning (2009) ISBN-13: 978-1428311497
5. James D. Halderman, Automotive Technology, Principles, Diagnosis and service, fourth Edition, 2012, Prentice Hall, ISBN - 3: 978-0-13-254261-6
6. K.K.Jain and R.B.Asthana, Automobile Engineering, Tata McGraw-Hill Publishing Company Limited, New Delhi
7. R.K.Rajput, A Text Book of Automobile Engineering, Laxmi Publications, New Delhi.
8. A.K. Babu & Er. Ajit Pal Singh, Automobile Engineering, S.Chand Publishing, New Delhi
9. Internal Combustion Engines by V. Ganesan, Tata McGraw-Hill Education, 2004
10. Automotive Mechanics by William Crouse, Donald Anglin

BAE_ENG_Chapter_09.indd 181 01/11/2022 11:57:52 AM

Webliography

1. http://www.mechanicalbooster.com/2014/02/what-is-chassis-in-automobile-how-many-types-of-car-according-to-the-body-style.html
2. https://autokeeda.wordpress.com/2015/03/28/various-loads-acting-on-frame/
3. https://www.pressmark.co.uk/chassis-manufacturing-process/
4. https://info.japanesecartrade.com/content-item/237-classification-of-cars-on-the-basis-of-body-type
5. https://www.popularmechanics.com/cars/how-to/a3110/a-diy-guide-to-painting-your-car-15998013/
6. https://www.thoughtco.com/auto-body-dent-repair-281389

Evaluation

BZJM3

PART - A

One mark questions

Choose the correct answer

1. The metal used for manufacturing of chassis frame is _____
   a. Alloy steel
   b. Rubber
   c. Asbestos
   d. Wood powder

2. Chassis frames are classified into _____ types
   a. 2
   b. 3
   c. 4
   d. 5

3. In heavy vehicles, _____ type of chassis frame is used.
   a. Conventional frame
   b. Semi – integral frame
   c. Integral frame
   d. None of the above

4. An automobile without body is called as
   a. Frame
   b. Clutch
   c. Body
   d. Chassis

5. The distance between the two front wheels is called as
   a. Wheel base
   b. Wheel track
   c. Ground clearance
   d. Overall width

6. The vehicle part which prevent the passenger from sunlight, rain, dust is known as
   a. Frame
   b. Windshield wiper
   c. Body
   d. Transmission system

BAE_ENG_Chapter_09.indd 182 01/11/2022 11:57:52 AM

7. The backbone of the automobile is _____
   a. Chassis frame
   b. Body
   c. Engine
   d. Differential

8. The chassis in which the body and the frame are acting as a single unit is known as
   a. Conventional frame
   b. Semi – integral frame
   c. Integral frame
   d. Chassis frame

9. The complete vehicle is obtained when _____ is integrated with the chassis frame.
   a. Windshield wiper
   b. Differential
   c. Body
   d. Electrical accessories

10. Generally, vehicle bodies are classified into _____ types.
    a. 2 b. 3
    c. 4 d. 5

Part – B

Three mark questions

1. Classify the types of Chassis Frame.
2. What do you mean by Chassis?
3. List any three parts that are mounted on the chassis.
4. List out the materials that are used to manufacture the chassis frame.
5. Define wheelbase.
6. State the functions of vehicle body.
7. What is painting process?

Part –C

Five mark questions

1. Highlight the functions of chassis frame.
2. Draw the chassis frame with indicate the parts
3. Explain the vehicle body and list out the functions.
4. Explain the various parts that are connected to the chassis frame?

Part – D

Ten mark questions

1. Indicate the various loads that are acting on a Chassis Frame.
2. List out the requirements of a vehicle body.
3. Briefly explain about important dimensions of a vehicle.

BAE_ENG_Chapter_09.indd 183 01/11/2022 11:57:52 AM

UNIT 10

Electrical System



Contents

10.0 Introduction
10.1 Battery
- 10.1.1 Types of Battery
- 10.1.2 Construction and Working Principle of Lead-Acid Battery
- 10.1.3 Battery Charging

10.2 Ignition System
- 10.2.1 Types of Ignition System
  - 10.2.1.1 Battery Coil Ignition System
  - 10.2.1.2 (a) Rotating Armature Type Magneto Ignition System
  - 10.2.1.2 (b) Rotating Magnet Type Magneto Ignition System
  - 10.2.1.3 Electronic Ignition System

10.3 Ignition Coil
10.4 Spark Plug
- 10.4.1 Types of Spark Plug
- 10.4.2 Ignition Switch and Key

10.5 Difference Between Battery Coil Ignition System And Magneto Ignition System
10.6 Distributor
10.7 Ignition Advance Mechanism
- 10.7.1 Types of Ignition Advance
  - 10.7.1.1 Vacuum Advance Mechanism

10.8 Engine Starting System
- 10.8.1 Starter Motor Drive Mechanism
  - 10.8.1.1 Bendix Drive Starting System
- 10.8.2 Starting Switch
- 10.8.3 Maintenance of Starter Motor

10.9 Charging System
- 10.9.1 D.C Generator (or) Dynamo
- 10.9.2 Cut Out Relay
- 10.9.3 Alternator

10.10 Lighting System
- 10.10.1 Important Lights in a Lighting System
- 10.10.2 Vehicle Lighting Circuit
- 10.10.3 Direction Indicator Lamps

10.11 Wind Screen Wiper
10.12 Air Conditioning System
- 10.12.1 Construction and Working of Air Conditioning System

10.13 Troubleshooting, Causes and Remedies in the Ignition System
10.14 Troubleshooting, Causes and Remedies in the Starter Motor

M71IJ

BAE_ENG_Chapter_10.indd 184 01/11/2022 12:01:21 PM

Learning objectives

1. To learn about the types, importance of the electrical system used in an automobile.
2. To understand the construction, working principle of various electrical systems used in an automobile.

10.0 Introduction

Electrical energy is a form of an energy. Electrical energy is used for domestic, agriculture and industrial purpose etc. Electrical energy plays an important role in an automobile. The automotive electrical system can be classified as follows.

1. Starting System
2. Ignition System
3. Lighting System
4. Generation, Storage and Distribution System
5. Accessories

10.1 Battery

The battery is an important and essential component in an automotive electrical system. The electrical energy is stored in the battery and it is supplied to all the electrical subsystem when the vehicle is not operating. The battery is considered as the heart of an automotive electrical system.

A positive terminal and a negative terminal form a cell. Several cells are connected in series or in parallel is called as a battery.

A battery is used to store electrical energy as chemical energy. This chemical energy is then converted to electrical energy as and when required. The conversion of electrical energy into chemical energy by applying external electrical source is known as charging of the battery. Whereas conversion of chemical energy into electrical energy for supplying the external load is known as discharging of the battery.

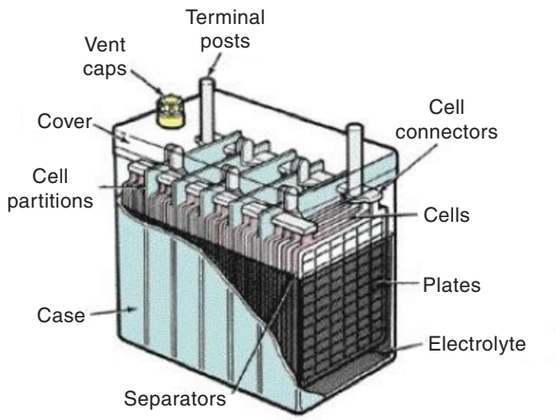

10.1.1 Types of battery

1. Lead Acid Battery
2. Lithium-iron Battery
3. Nickel Cadmium Battery
4. Nickel Metal Hydride Battery
5. Sodium Sulphur Battery

Out of which, the lead-acid battery is widely used in an automobile.

10.1.2 Lead Acid Battery Construction And Working Principle

The following are the important parts of a battery

BAE_ENG_Chapter_10.indd 185 01/11/2022 12:01:21 PM

1. Container
2. Plates
3. Separator
4. Cell cover
5. Electrolyte
6. Terminal post

Container

The container is a single piece moulded part made up of hard rubber or bituminous. The container will house all the internal parts of a battery and holds the liquid electrolyte. The container is divided into six compartments for the six cells. Projections are provided on the inside at the bottom to support the plates. Bridges are used to prevent the plate from touching at the bottom.

Plates

Plates are of two types viz. 1. Positive plate and 2. Negative plate

The positive plate is made of lead peroxide. This is dark brown, hard and brittle substance. Lead oxide acts as active material. Highly porous in nature. The negative plate is made of pure lead in soft sponge condition. Spongy lead acts as active material. Grey in colour. Highly porous in nature. Grids are used to hold the plates and to conduct the electrical charge.

Separator

Separators are placed between positive plates and negative plates to insulate them between each other. This will prevent the short-circuiting between the positive and negative plates. The separators are thin sheets of non-conducting material made up of chemically treated wood, porous rubbers, or mats of glass fibre. The separators must be porous so that the electrolyte may circulate between the plates.

Cell cover

Cellcover is used to cover the complete cell. It protects the cell from the dust as well as other external impurities. Vent holes are provided to exhaust the gases generated in the cell to the atmosphere. Filler openings are available to fill up the electrolyte.

Electrolyte

In lead-acid battery dilute sulphuric acid (H_2SO_4)is used as an electrolyte. For this purpose, one part concentrated sulphuric acid is mixed with three parts of distilled water.

Terminals

Terminals are used to connect the charging circuit as well as the load. For easy identification, the diameter of the positive terminal is bigger than the negative terminal.

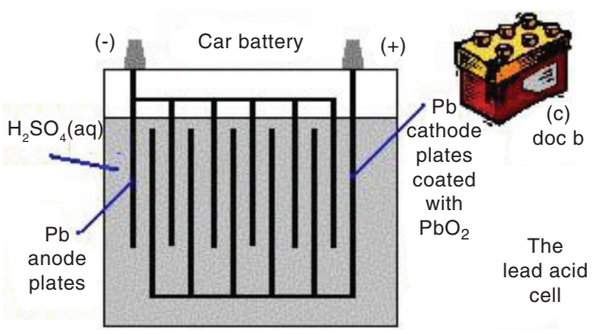

Working principle

During discharging (i.e., supplying a current), atoms from the spongy lead on

BAE_ENG_Chapter_10.indd 186 01/11/2022 12:01:21 PM

the negative plates combine with sulphate molecules to form lead sulphate and hydrogen. The combination of lead peroxide and hydrogen at the positive electrode produces water and lead sulphate. The water dilutes the electrolyte, making it a weaker solution, drop in cell voltage, hence specific gravity of electrolyte is reduced.

During recharging, current is made to flow into the positive electrode of each cell. This current causes the lead sulphate at the negative electrode to recombine with hydrogen ions, thus re-forming sulphuric acid in the electrolyte and Spongy lead on the negative plates. Also, the lead sulphate on the positive electrodes recombines with water to regenerate lead peroxide on the positive plates and sulphuric acid in the electrolyte. Thus cell voltage is increased and the specific gravity of electrolyte is increased.

The two way of reversible chemical reaction (charged on the left and discharged on the right) is given as

Lead Peroxide + Sulphuric Acid + Spongy Lead ⇆ Lead Sulphate + Water + Electrolyte

$PbO_2 + 2H_2SO_4 + Pb \leftrightarrows PbSO_4 + 2H_2O + PbSO_4$

10.1.3 Battery Charging

The battery is charged by the vehicle generator during vehicle running. When the engine is in off condition, the electrical device will utilise the stored electrical energy from the battery. This will quickly discharge the battery and it requires external charging to charge the battery.

Method of Charging

1. Constant Voltage Method
2. Constant Current Method
3. Quick Charging Method

1. Constant voltage method

The charging voltage is kept constant throughout the charging process. The charging current is high in the begining when the battery is in the discharge condition. The current is gradually dropping off as the battery picks up charge

2. Constant current method

The charging current is kept constant throughout the charging period. The charging may be carried out in two steps. An initial charging of approximately higher volt and a finishing rate of low volt is used to avoid excessive gassing or overheating.

3. Quick charging method

The 80% of the total charging is done with high current and later the charging current is reduced. A battery in good condition alone charged in this method.

Specific gravity	Cell Voltage	Battery Voltage	% Charge
1.28	2.12 V	12.7 V	100
1.24	2.08 V	12.5 V	70
1.20	2.04 V	12.3 V	50
1.15	1.99 V	12.0 V	20
1.12	1.96 V	11.8 V	0

A battery is called as 'dead battery' when the battery is completely discharged condition.

BAE_ENG_Chapter_10.indd 187 01/11/2022 12:01:21 PM

10.2 Ignition system

1. To supply a spark inside the cylinder, at the end of compression stroke, to ignite the compressed charge of the air-fuel mixture.
2. Convert low tension current into high tension current. (6v to 12v in to 20,000 to 30,000v)
3. To produce spark in the multi cylinder engine at the right time as per the firing order.

10.2.1 Types of ignition system

1. Battery coil Ignition system
2. Magneto Ignition system
3. Electronic Ignition system

10.2.1.1 Battery coil ignition system

The main parts of a battery coil ignition system is

1. Battery
2. Ignition Coil
3. Contact breaker points
4. Condenser
5. Distributor
6. Spark plug
7. Ignition Switch

Battery

A battery is used to provide energy for ignition. The battery is charged by the dynamo or alternator and provide electrical energy to the electrical parts in the vehicle as and when it is required.

Ignition coil

An ignition coil is made up of an iron core surrounded by two insulated coils, namely primary winding and secondary winding. Acting as a step-up transformer. It converts low tension current (12v) into high tension current of 20000 to 30000

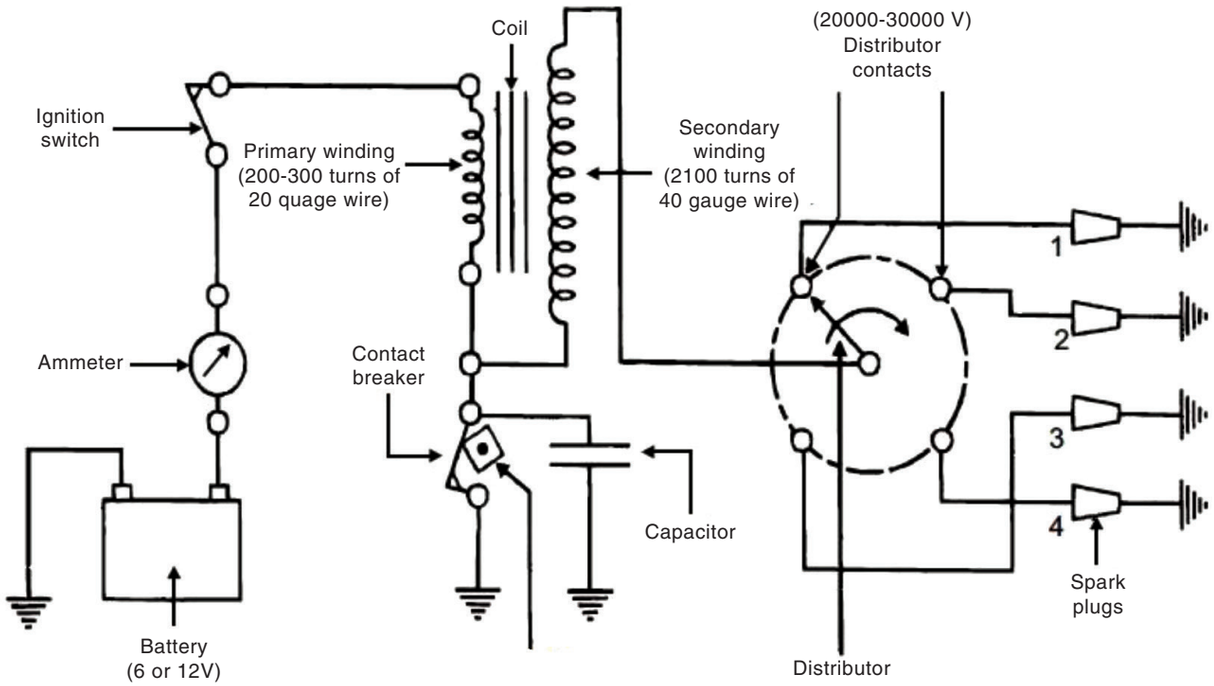

Figure 10.2.1.1 (a) Battery coil ignition system

BAE_ENG_Chapter_10.indd 188 01/11/2022 12:01:22 PM

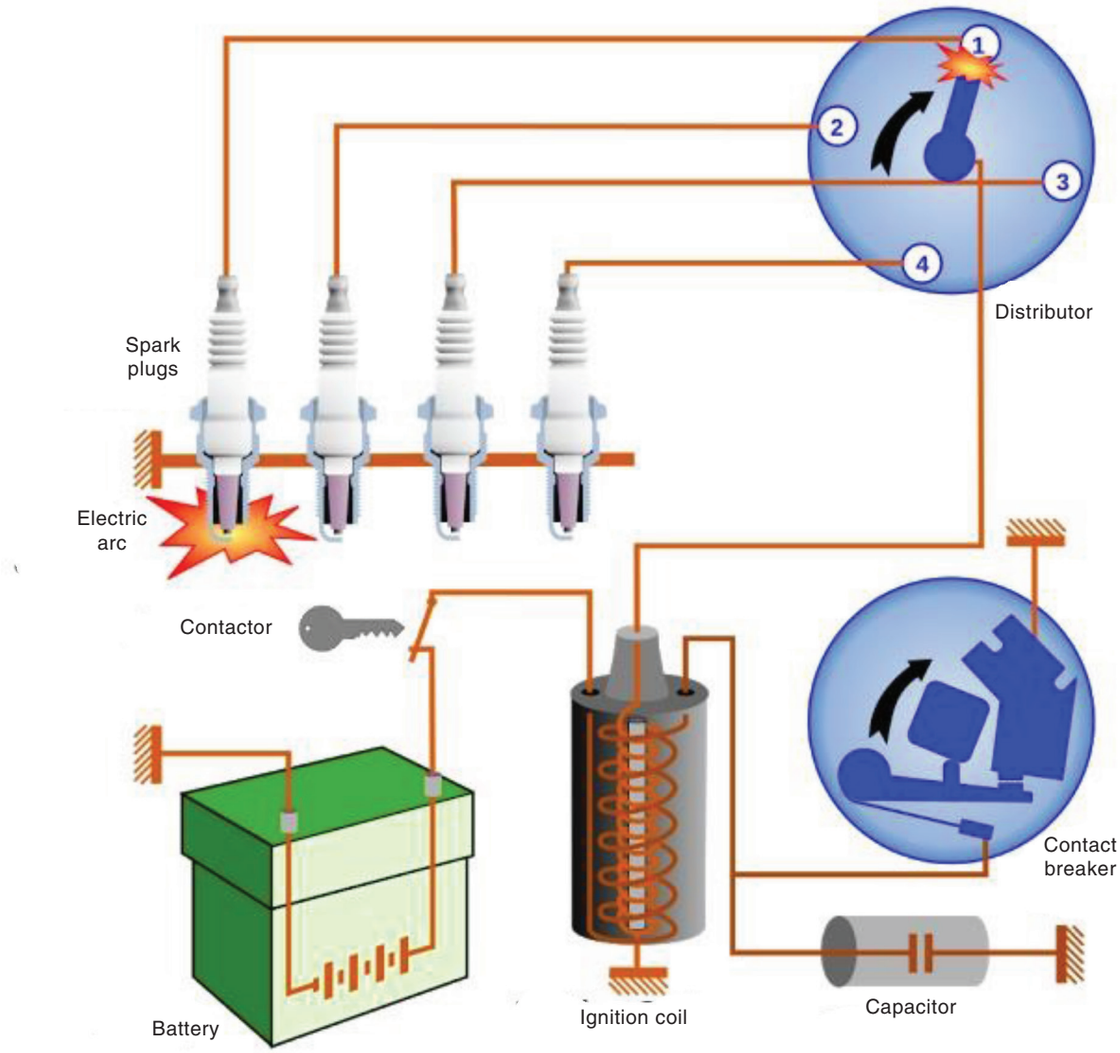

Figure 10.2.1.1 (b) Battery coil ignition system

volts. This high tension current enables to generate a spark across the electrodes of a spark plug.

Contact breaker points

The opening and closing of the primary circuit are made by contact breaker points. When the points are closed current flow in ignition coil and charge the primary circuit and when it open, discharge of primary current take place and by mutual induction, in secondary coil high tension current is induced.

Condenser

A condenser is connected in parallel to the contact breaker points to prevent arching at the contact breaker points. Also, used to increase the intensity of the spark.

Distributor

The distributor is used in multi-cylinder engine to distribute the high tension current from the ignition coil to the individual spark plug as per the firing order.

BAE_ENG_Chapter_10.indd 189 01/11/2022 12:01:23 PM

Spark plug

A spark plug has two electrodes which are separated with each other. When a high tension current is applied between these two electrodes, it produces spark to ignite the air fuel mixture in the engine cylinder.

Working Principle

When the ignition switch is turned "ON", the current flows from the battery to the primary winding, through the contact breaker. The flowing current induces a magnetic field in the primary winding. As the contact breaker opens, the current collapses resulting in high tension induction in the secondary winding. This high tension generated in the secondary winding is transferred to the distributor by a cable. The distributor distributes high tension to the spark plug located in the individual cylinder as per the firing order. A spark is generated in the spark plug to initialise the combustion of fuel and air.

10.2.1.2 (a) Rotating Armature type Magento System

Magneto ignition system is a special type of ignition system with its own electric generator to provide the required necessary energy for the vehicle. A magneto, when rotated by the engine, is capable of producing a very high tension and doesn't need a battery as a source of external energy. It is mounted on the engine and replaces all components of the coil ignition system except the spark plug. Magneto ignition system can be either rotating armature type or rotating magneto type.

Construction

Permanent magnets are stationary and acting as the North and South poles. The armature consisting of the primary and secondary windings all rotate between the poles of a stationary magnet. Primary winding will be made up of thick wire with less no. of turns (150 to 300 turns) and the secondary winding is made up of thin wire with more No. of turns (15000 to 25000 turns). Contact breaker points and condenser are connected to the primary winding and spark plug is connected to the secondary winding.

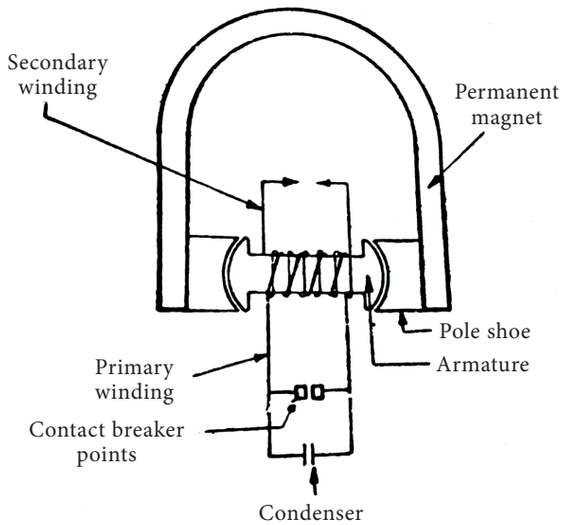

Figure 10.2.1.2 (a) Rotating armature type magnet ignition

Working

When the armature rotates, the flow of current is happening in primary winding and Contact breaker point in the closed condition. The magnetic field is induced in primary winding. When the contact breaker point open, the magnetic field in the primary winding collapses and by mutual induction principle, high tension current is induced in the secondary winding. This high tension current is applied to the spark

BAE_ENG_Chapter_10.indd 190 01/11/2022 12:01:24 PM

plug and spark is produced to ignite the air-fuel mixture in the combustion chamber.

10.2.1.2 (b) Rotating magnet type magneto ignition system

Construction

In this permanent magnet are fitted over the engine flywheel. The fixed armature will have few hundred winding (150 to 300 turns) made up of thick wire and this act as a primary winding. The secondary winding is made up of thin wire with thousands of turns (15000 to 25000 turns). Contact breaker points and condenser are connected to the primary winding and spark plug is connected in the secondary winding.

Working

When the flywheel is rotated, the permanent magnet will also rotate. This will make the flow of current to the primary winding and generates magnetic field. When the contact breaker points open, the magnetic field in the primary winding collapses and by mutual induction principle, high tension current is induced in the secondary winding. This high tension current is applied to the spark plug and spark is produced to ignite the air-fuel mixture in the combustion chamber.

10.2.1.3 Electronic ignition system

The following are the important parts of an Electronic Ignition System

1. Battery
2. Ignition Switch
3. Ignition Coil
4. Electronic Control Unit
5. Distributor
6. Spark Plug
7. Reluctor

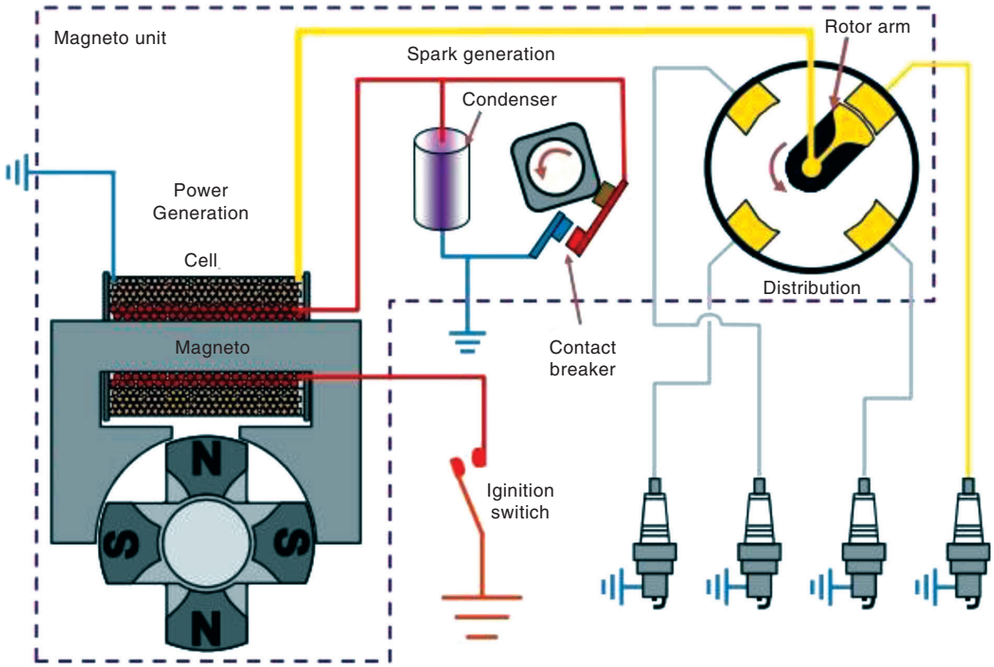

Figure 10.2.1.2 (a) Rotating armature type magento system

BAE_ENG_Chapter_10.indd 191 01/11/2022 12:01:25 PM

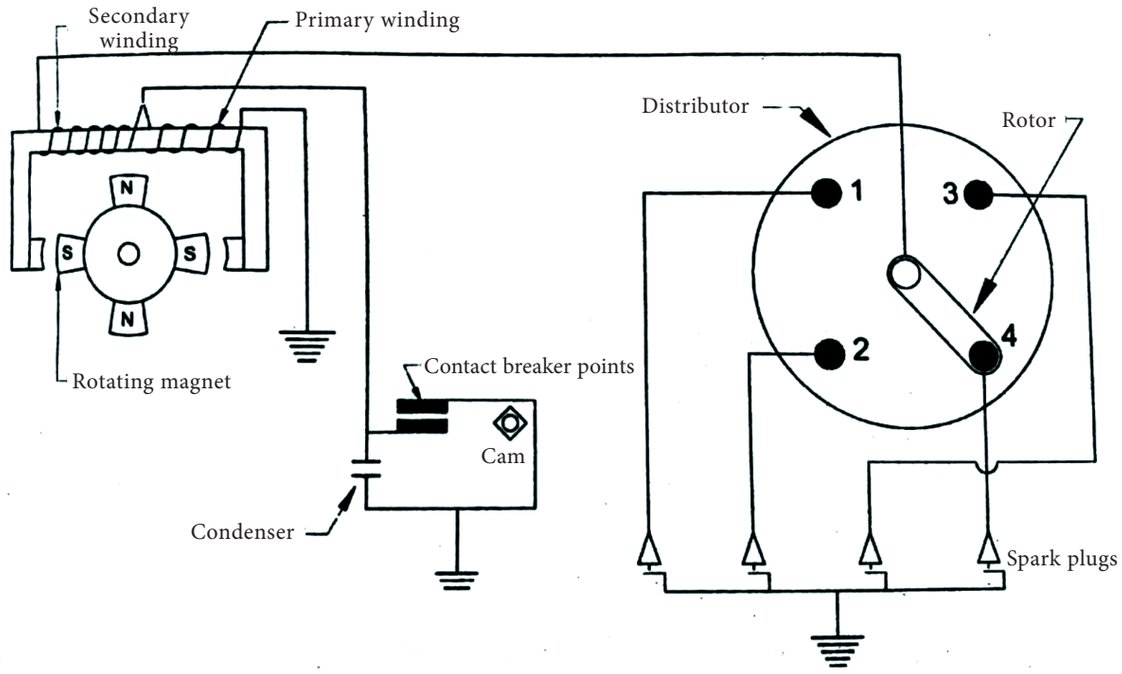

Figure 10.2.1.2 (b) Rotating magnet type magneto ignition system

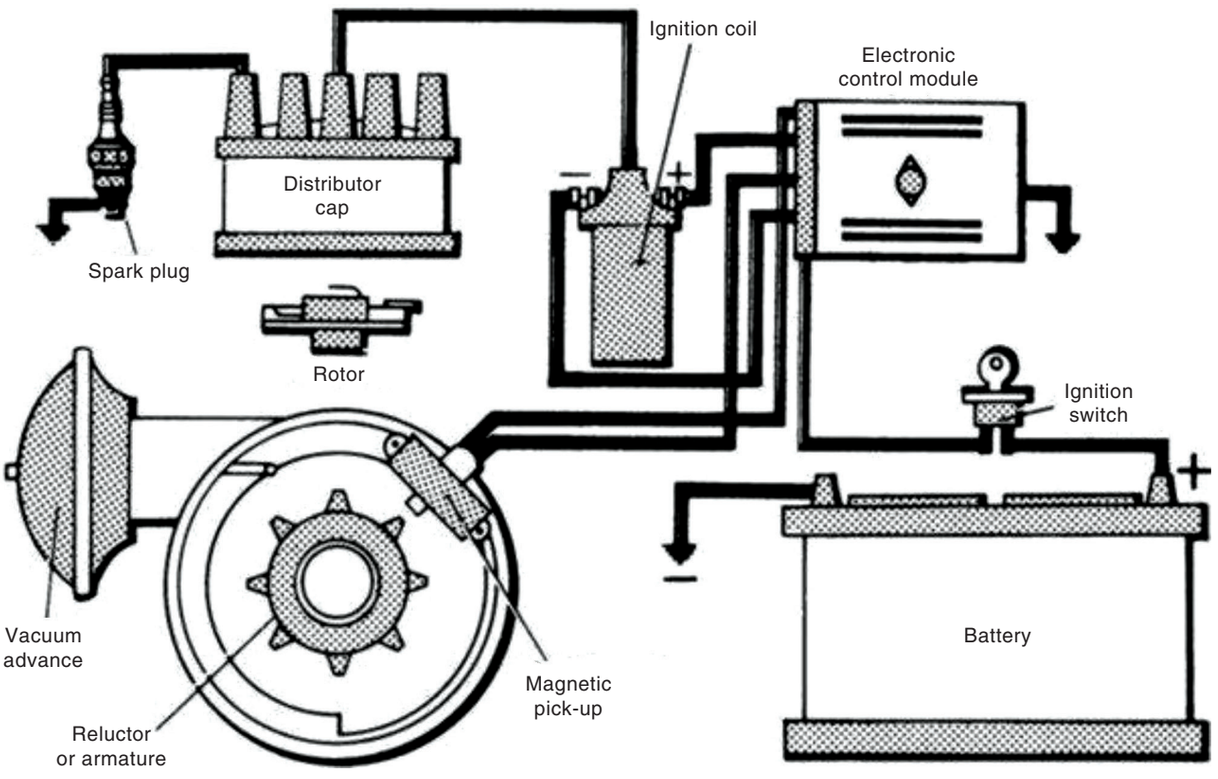

Figure 10.2.1.3 (c) Electronic ignition system

BAE_ENG_Chapter_10.indd 192 01/11/2022 12:01:28 PM

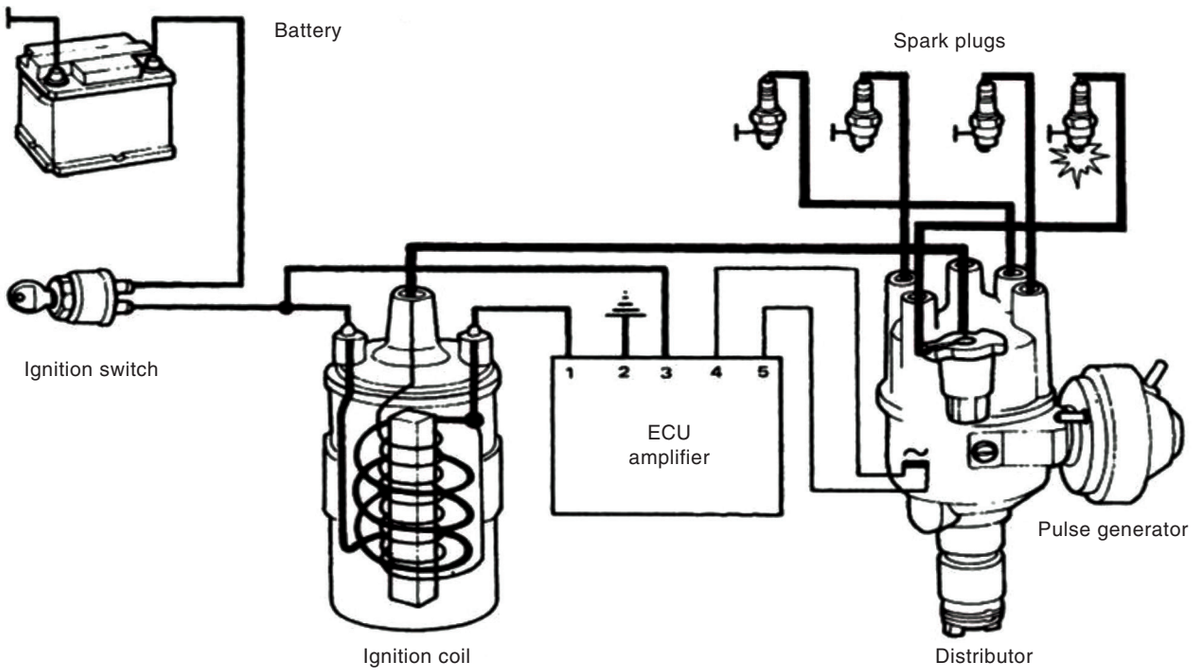

Figure 10.2.1.3 (b) Electronic ignition system

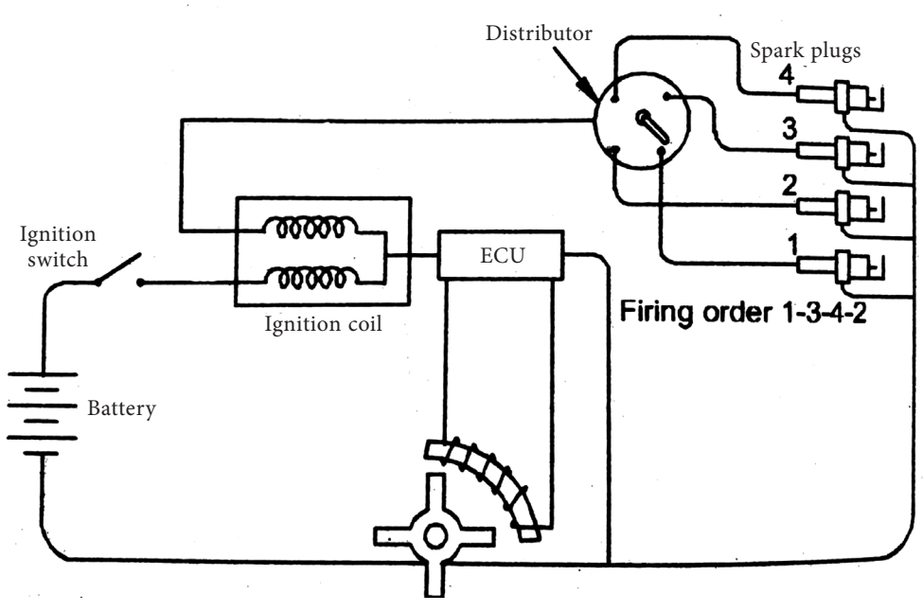

Figure 10.2.1.3 (c) Electronic ignition system

Working

Permanent magnet and pick up coil are placed in the distributor. The magnetic flux from the magnet will pass through the reluctor. Hence, electricity is generated. The current will flow through the electronic control unit. ECU has the diode and the transistor and it controls the flow of current to the primary circuit. When ECU closes the primary circuit, the primary winding charges. When ECU opens the primary circuit, the charge in the primary winding collapses and by mutual induction, high tension current

BAE_ENG_Chapter_10.indd 193 01/11/2022 12:01:30 PM

is induced in the secondary winding. This high tension current will reach the respective spark plug as per the firing order through a distributor. Thus, the spark is produced and the air-fuel ,mixture is ignited.

Advantages

1. No moving parts
2. Ignition timing is controlled by ECU, hence no need for an advance mechanism
3. Long life for spark plug
4. Spark intensity is higher
5. Contact breaker points, condenser are eliminated

10.3 Ignition coil

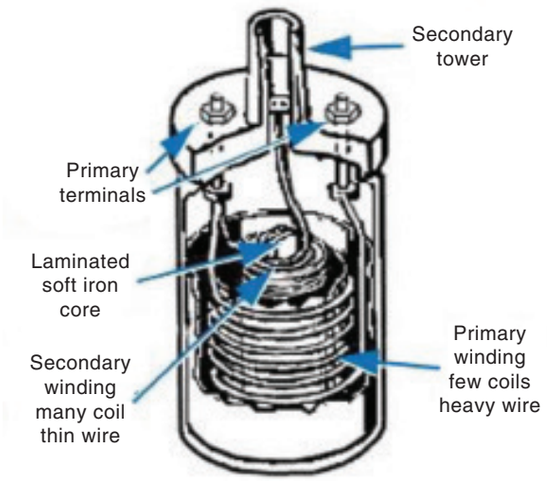

Figure 10.3 (a) Ignition coil

The ignition coil is used to convert 12 V D.C. from the battery to 20,000V to 30,000V A.C. It works on the principle of Faraday's law of electromagnetic induction. It is also called as Step up transformer. The primary coil is made up of thick wires with 150 to 300 turns. The secondary coil is made up of thin wires with 20000 to 25000 turns.

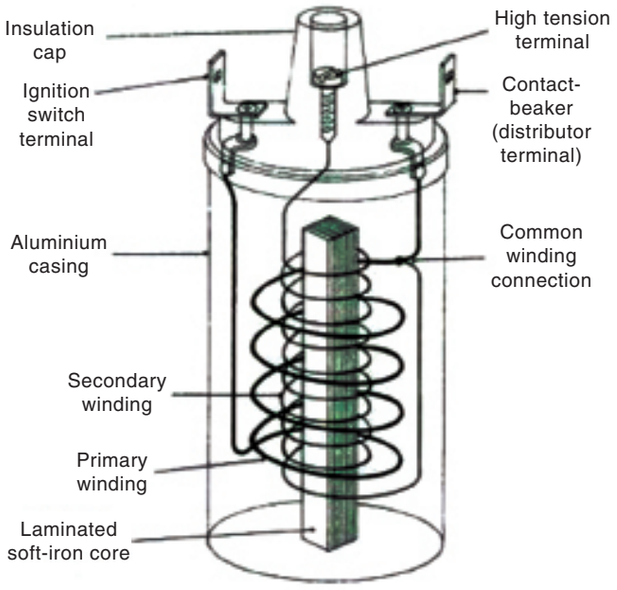

Figure 10.3 (b) Ignition coil

Types of Ignition coil

1. Can type (or) Metal glad type
2. Core type

10.4 Spark plug

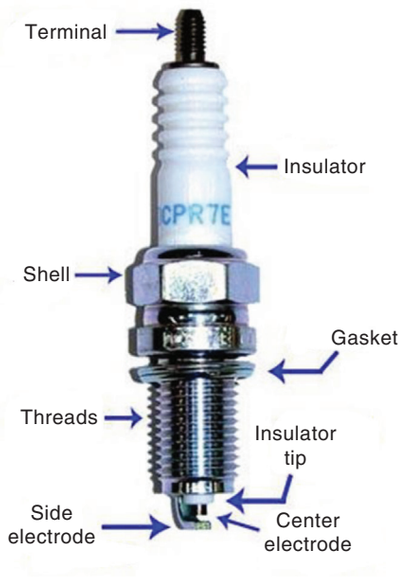

Figure 10.4 (a) Spark plug

In petrol engines, at the end of compression stroke, the spark plug is used to

BAE_ENG_Chapter_10.indd 194 01/11/2022 12:01:31 PM

introduce spark to ignite the air-fuel mixture. Spark plug consists of a central electrode, a ground electrode, an insulator. There is a small gap (0.5mm to 0.7mm) is available between the central electrode and ground electrode. When the high tension current from the ignition coil through a distributor is applied between these electrodes, spark is produced. This spark will ignite the air fuel mixture.

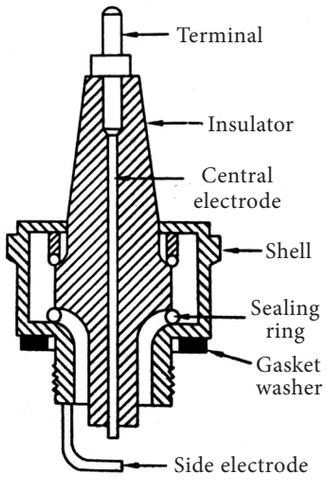

Figure 10.4 (b) Spark plug

10.4.1 Types of spark plug

1. Hot spark plug
2. Cold spark plug

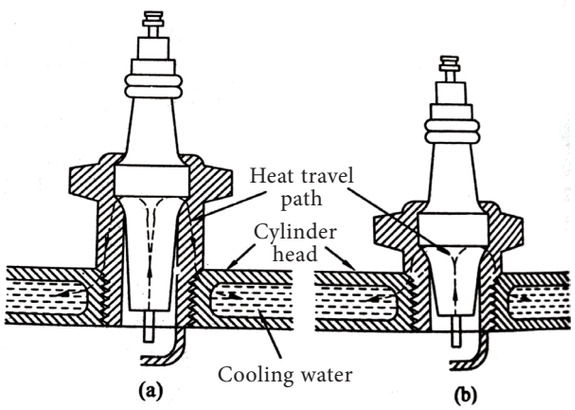

Figure 10.4.1 (a) Types of spark plug

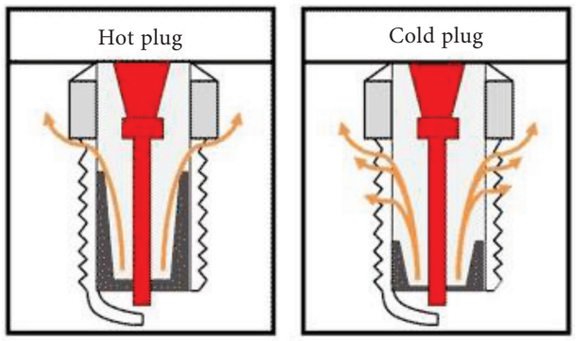

Figure 10.4.1 (b) Types of spark plug

Hot spark plug

In this type of spark plug, the length of the insulator is long and heat travel path is long. This spark plug is widely used in low-speed engine and engine operating in the cold climatic area.

Cold spark plug

In this, the length of the insulator is short and heat travel part is short. These spark plugs are widely used in high-speed engines and heavy loaded engines.

10.4.2 Ignition switch and key

The Ignition switch is used to connect the battery to the required circuits via a key. It will have three terminal viz., The battery (B), Ignition (Ig) and Starter (St). The terminal B is always connected to the battery. Ignition system, fuel system, lighting and other electrical accessories are connected in the Ignition terminal via a fuse. The solenoid switch of the starter motor is connected in Starter (St) terminal.

When the ignition switch is positioned in Ignition (Ig), then the electricity from the

BAE_ENG_Chapter_10.indd 195 01/11/2022 12:01:32 PM

battery will flow to all the electrical system (except starting system) of the vehicle. When the ignition switch is positioned in Starter (St), then the current will flow to the starter motor through the solenoid and thus the engine is started.

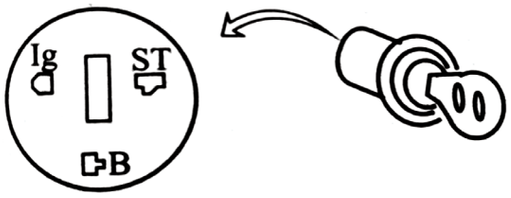

Figure 10.4.2 Ignition Switch

10.5 Difference between battery coil ignition system and magneto ignition system

	Battery coil ignition system	Magneto ignition system
1.	Electrical energy is supplied by the battery	Electrical energy is generated by the Magento
2.	Easy to start the engine	Little difficult to start the engine
3.	Difficult to start the engine, when the battery is low	The battery is not required; hence this problem will not arise
4.	Wiring circuit is complex	Wiring circuit is simple
5.	Spark intensity is good even at low engine speed.	Spark intensity is poor during low engine speed.
6.	More space is required	Less space is required
7.	Difficult in maintenance	Easy maintenance
8.	Does not work, if the battery fails	No need for battery
9.	Used in Cars, buses and trucks	Used in Moped, Scooter, Motor bikes.

10.6 Distributor

The Distributor does two functions. First, it has a set of contact breaker points, that works as a switch. When the CB points close, current flows through the coil. When the CB point open, current flow stops and coil produces a high tension current. A condenser is connected in parallel to the CB points. The condenser aids in the collapse of the magnetic field and help to reduce arching occurs between the CB points.

Second, the distributor is used to distribute the high tension current from the ignition coil to the spark plugs in the correct firing order. A coil wire delivers the high tension from the coil to the centre terminal of the distributor cap. Inside the cap, a rotor is on top of the distributor shaft. The distributor shaft is driven from the engine camshaft by a pair of spiral gears. When the rotor turns, the centre terminal of the distributor cap is connected by spark plug wires to the spark plugs. The spark plug wires carry the high tension current to the spark plug in the cylinder that is ready to fire.

BAE_ENG_Chapter_10.indd 196 01/11/2022 12:01:32 PM

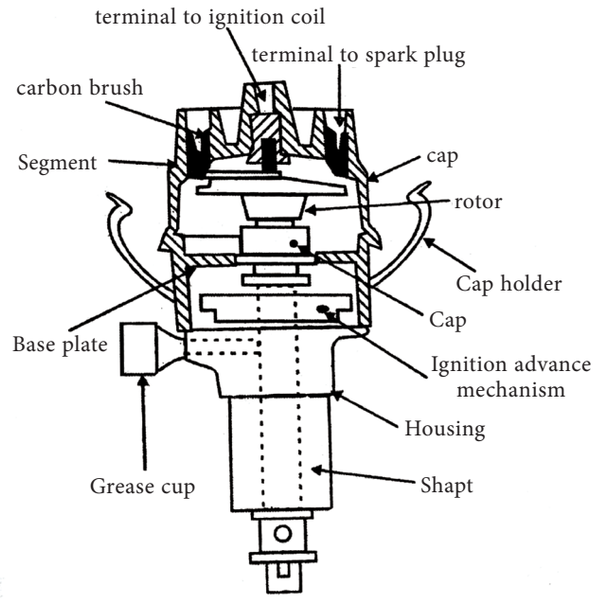

Figure 10.6 (a) Distributor



Figure 10.6 (b) Distributor

10.7 Ignition advance Mechanism

In an engine, the spark is timed just before the piston reaches TDC on the compression stroke. This will ensure the peak combustion pressure is obtained just after the TDC. If the pressure rise is before the TDC, then it will result in a weak power stroke. If the pressure rise is after the TDC, then the piston is moving down on the power stroke before combustion pressure reaches its maximum. When there is a change in the load and speed of the engine, then the ignition timing has to be adjusted accordingly to ensure maximum pressure just as the piston moves through the TDC and this is called as ignition advance.

10.7.1 Types of ignition advance

1. Vacuum advance mechanism
2. Manual method
3. Centrifugal advance mechanism
4. Combined centrifugal and vacuum advance

10.7.1.1 Vacuum advance mechanism

When the throttle valve is partly open, a partial vacuum develops in the intake manifold. The less air-fuel mixture gets inside the engine cylinder and hence fuel burns slower. The spark must be advanced at part throttle to give the mixture more time to burn.

The vacuum advance mechanism advances spark timing by shifting the position of the base plate. The vacuum advance unit has a diaphragm linked to the base plate. A vacuum passage connects the diaphragm to a port just above the closed throttle valve. When the throttle valve moves past the vacuum port, the intake manifold vacuum pulls on the diaphragm. This rotates the base plate so that the contact points open and close earlier.

BAE_ENG_Chapter_10.indd 197 01/11/2022 12:01:32 PM

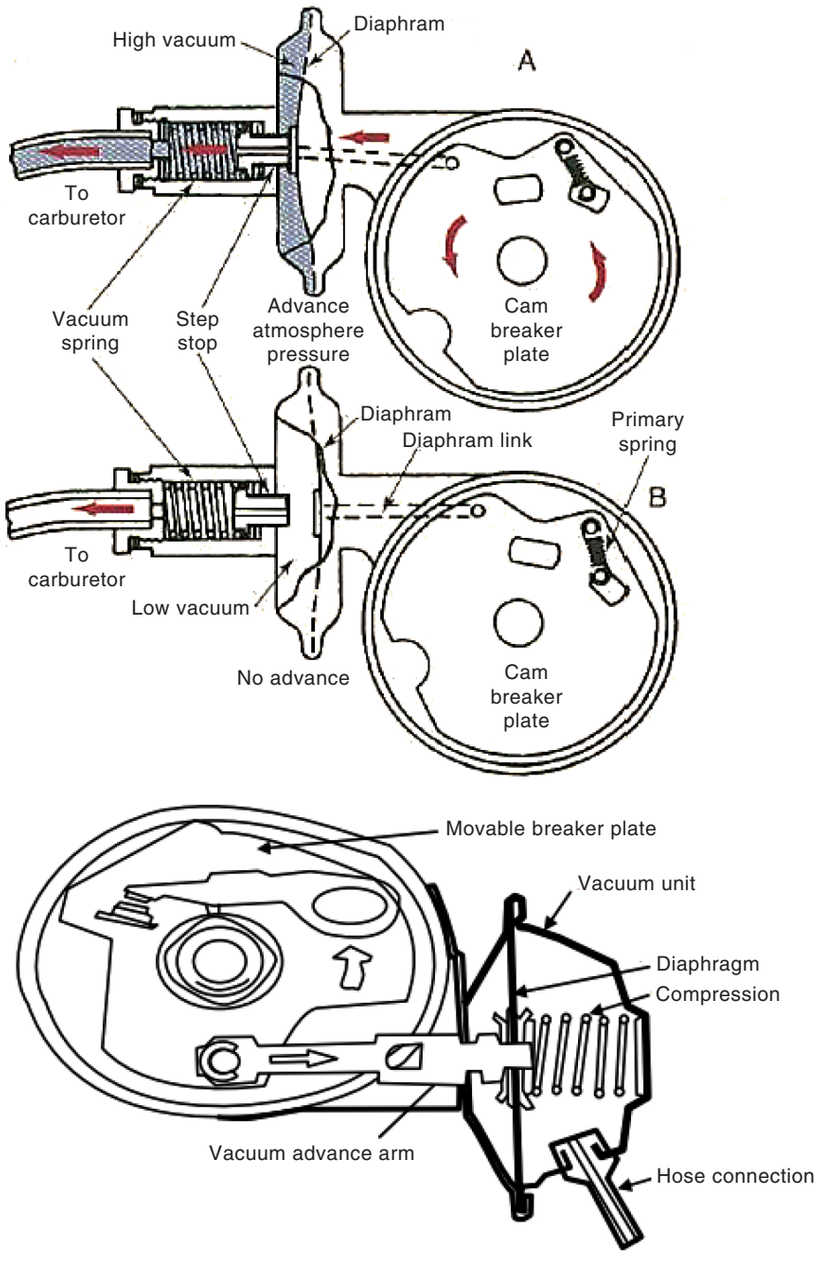

Figure 10.7 (a) Vacuum advance system

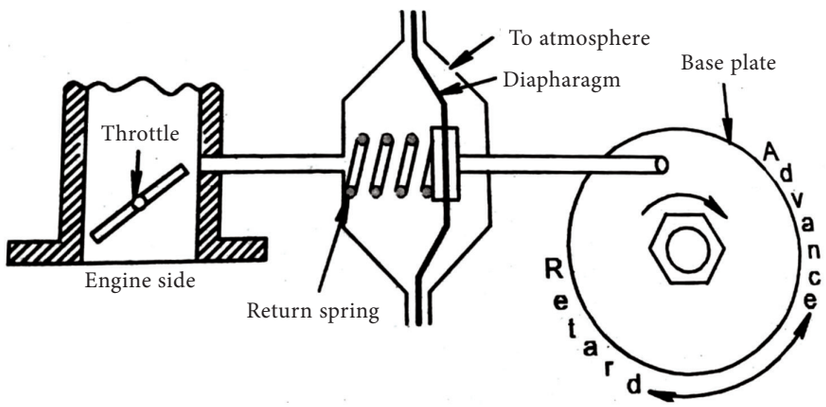

Figure 10.7 (b) Vacuum advance system

BAE_ENG_Chapter_10.indd 198 01/11/2022 12:01:33 PM

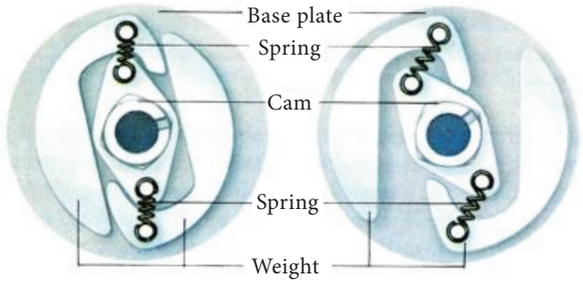

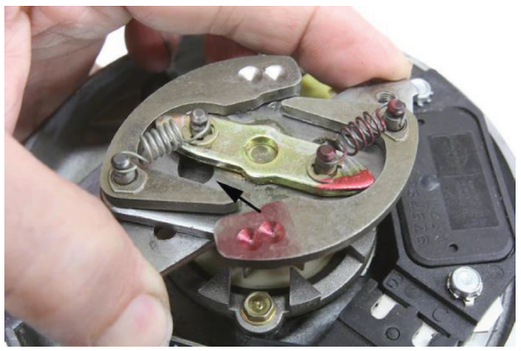



In 2017, Rolls-Royce unveiled a one-off custom build called the Sweptail. At a reported price of nearly $13 million, it is believed to be the most expensive new car ever.



10.8 Engine starting system

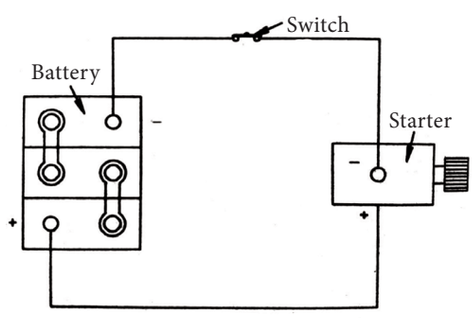

Figure 10.8 Engine starting circuit

The system which is used to start the engine is called as Starting system. In olden days, a handle is inserted and rotated in the crankshaft and thus the engine was started. Now, to crank the engine D.C. motors are used. The electrical energy from the battery is converted into mechanical energy by the D.C. Motor. The D.C. motor pinion is coupled with the ring gear in the flywheel and thus the engine is started.

BAE_ENG_Chapter_10.indd 199 01/11/2022 12:01:33 PM

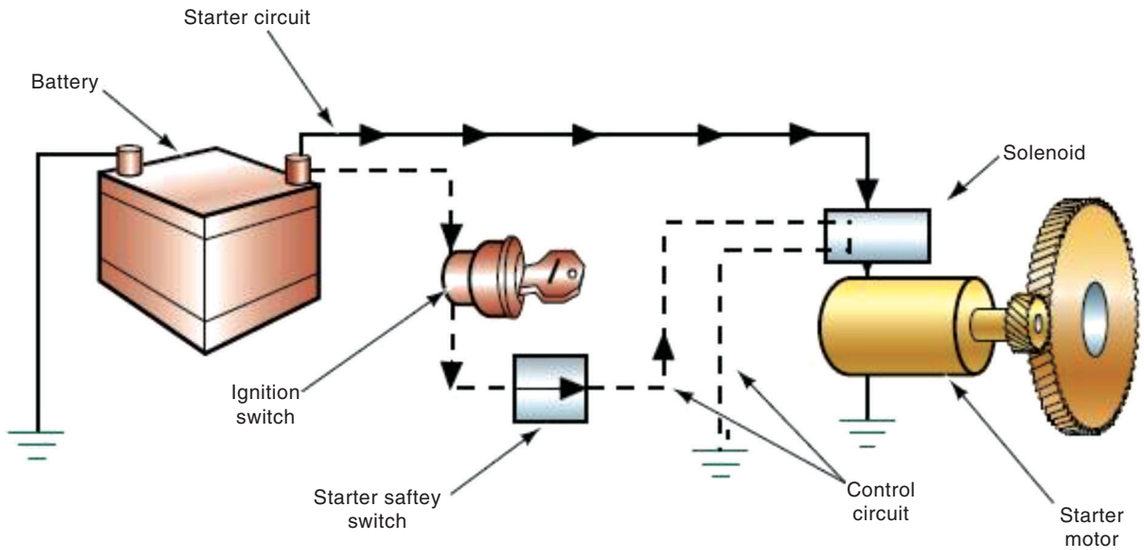

Figure 10.8 Engine starting system

10.8.1 Starter motor drive mechanism

The ratio between the starting motor pinion gear and the ring gear in engine flywheel is varied from 1:10 to 1:15. For example, if the ratio 1:15 means, the flywheel will rotate 1 revolution when the motor pinion rotates 15 revolutions. Once, the engine is cranked, then the speed of the engine will increase. If the starter motor is continuously engaged, then the engine will drive the motor and the speed of the motor will be 15 times higher than the engine speed. This will lead to failure of the starting motor. To prevent this, pinion gear should be disengaged from the flywheel ring gear once the engine is started and the mechanism used for disengagement is called as starter motor drive mechanism.

Types of starter motor drive mechanism

1. Bendix drive
2. Over running clutch type
3. Folo – thru system
4. Rubber compression system
5. Sliding armature system
6. Parallel type system
7. Friction clutch system

10.8.1.1 Bendix drive starting system

Construction

There is a threaded sleeve in an armature shaft. The sleeve will move on the shaft back and forth. Armature shaft is directly connected to the drivehead. Coil spring is mounted over the sleeve. Pinion will be over the sleeve. There is an unbalanced weight on the pinion.

Working

When the starter switch is "ON", armature and sleeve assembly rotate. While rotating, the pinion moves over the sleeve due to inertia as pinion is loosely mounted over the sleeve. The pinion is engaged with the flywheel ring gear and start the engine. As the engine speed increases, the pinion retracts and go away from the engine flywheel.

BAE_ENG_Chapter_10.indd 200 01/11/2022 12:01:34 PM

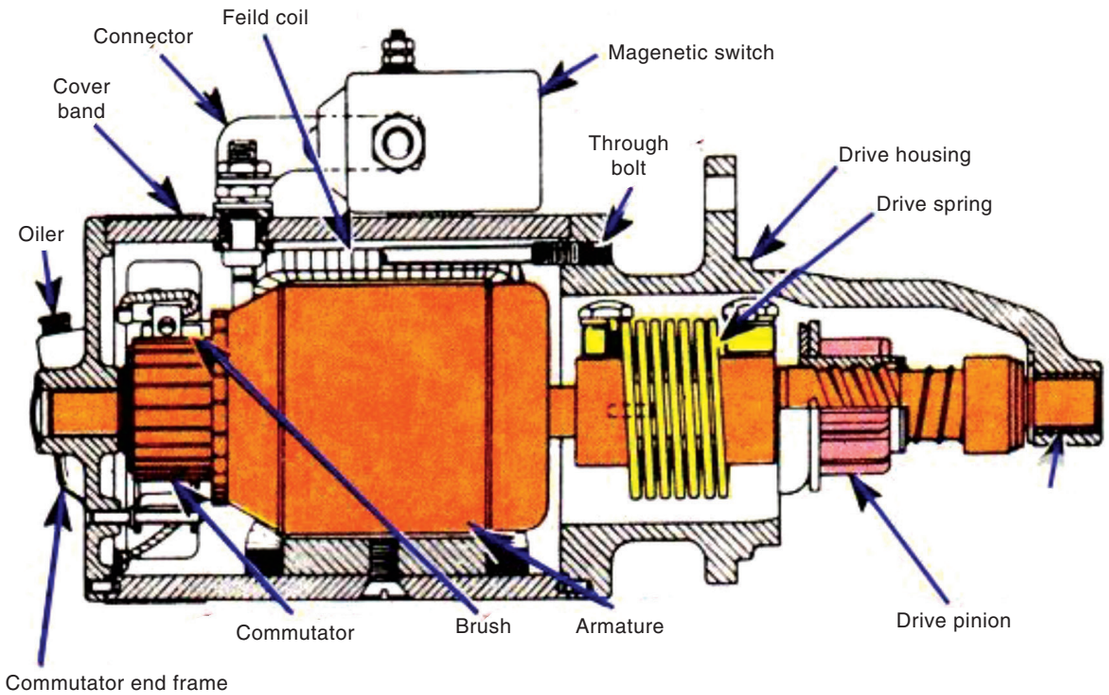

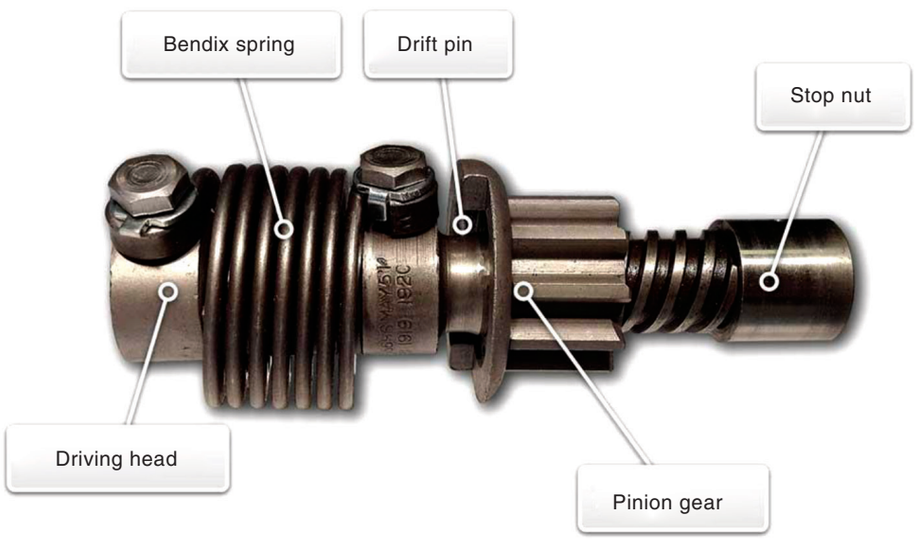

Figure 10.8.1.1 (a) Bendix drive starting system

10.8.2 Starting switch

The switch is a device which is used to open and close the electric circuit. A starting switch is used between the starter motor and the battery. In this, plunger, contact disc, pull-in – windings, terminals and connection wires are there. When the switch is on, the current passes from the battery to the pull-in – windings and it get magnetised. It pulls the contact disc and closes the circuit between the battery and the starter motor. When the switch is off, the pull-in – windings get demagnetise and the spring makes the circuit open between the battery and the starter motor. It is also called as 'Solenoid Switch'.

BAE_ENG_Chapter_10.indd 201 01/11/2022 12:01:34 PM

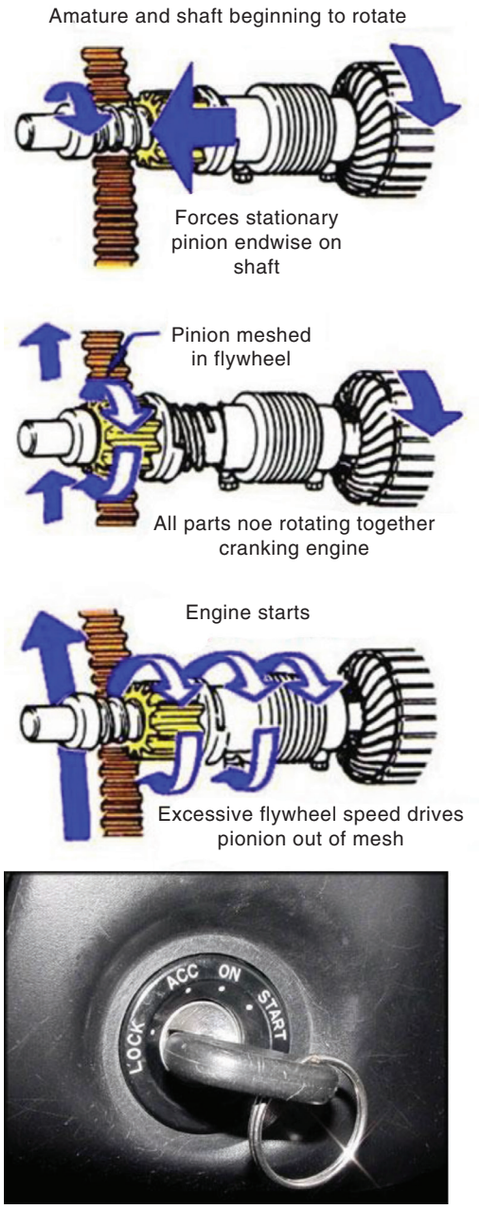

10.8.3 Maintenance of starter motor

1. Starting motor should not be operated continuously for more than 30 seconds.
2. Once the engine is turned on, the startingswitch should be released.
3. Periodic greasing should be made.
4. Ensure the proper tightness of cable
5. Replace the faulty bearing immediately
6. Don't crank the engine frequently, if the engine fails to start

10.9 Charging system

The mechanical energy of the engine is converted into electrical energy by means of a Generator. This electrical energy is stored in the battery. The generator is driven by the engine crankshaft. To control the current flow, regulators are used. An ammeter is used to measure the current. The generator is also called a dynamo.

10.9.1 Construction and working of generator (or) Dynamo

Based on the Faraday's laws of electromagnetic induction, the device

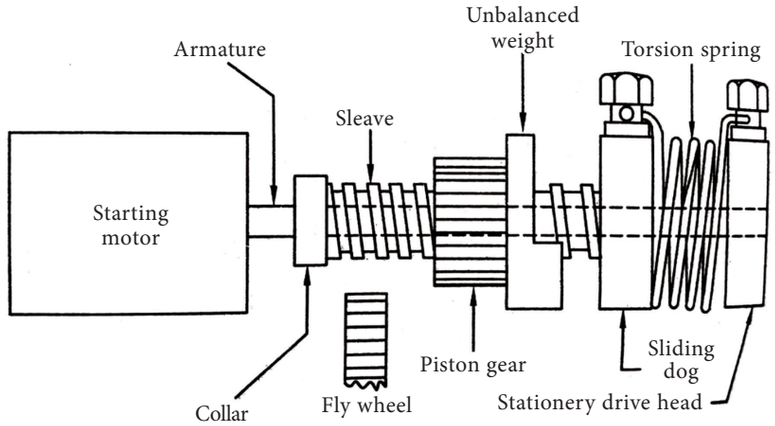

Figure 10.8.1.1 (b) Bendix drive starting system

BAE_ENG_Chapter_10.indd 202 01/11/2022 12:01:34 PM



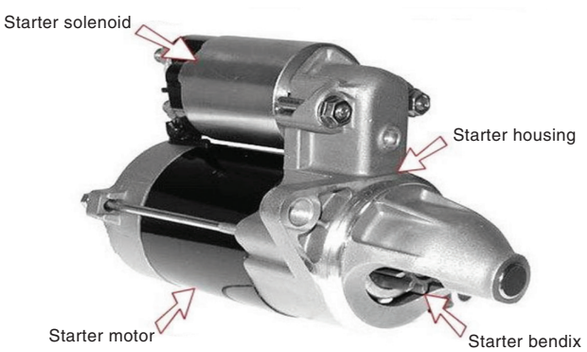

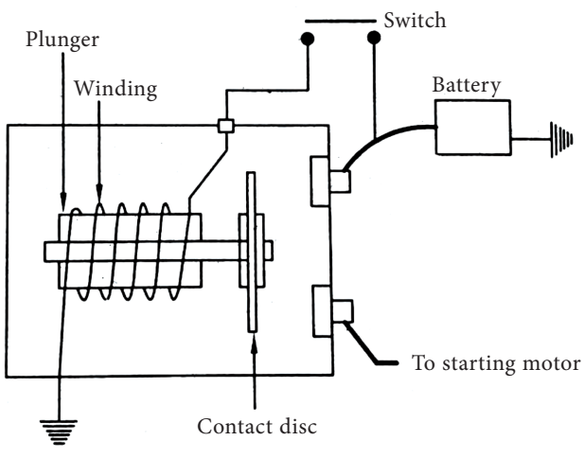

Figure 10.8.2 Starting Switch

which is used to convert mechanical energy from engine in to electrical energy is called as Generator (or) Dynamo.

Important parts

1. Frame
2. Armature
3. Commutator

Z1GSM

DO YOU KNOW?

- Most car companies themselves are named after their founders like Ford, Rolls-Royce, Austin, Ferrari, Lamborghini, Porsche, Renault, Citroen, Honda, Toyota (Toyoda), DeLorean etc.





- Car Radios Were Once Considered Dangerous.
- The first car radio was invented by Paul Gavin in 1929. It could be installed in most cars, and cost just over $100. In 1930, laws to ban the use of car radios while driving were proposed in Massachusetts and St. Louis because many feared them to be a dangerous distraction to drivers.

BAE_ENG_Chapter_10.indd 203 01/11/2022 12:01:35 PM

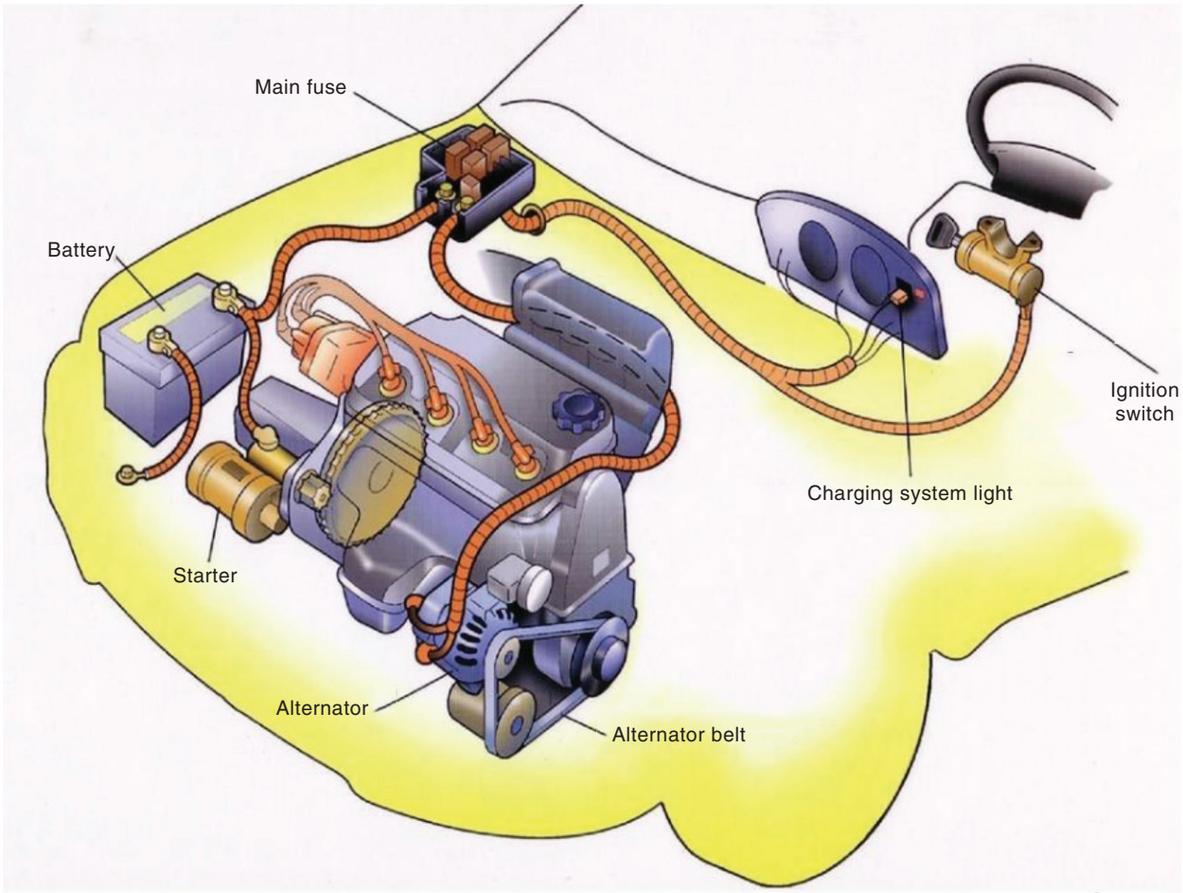

Figure 10.9 (a) Charging system

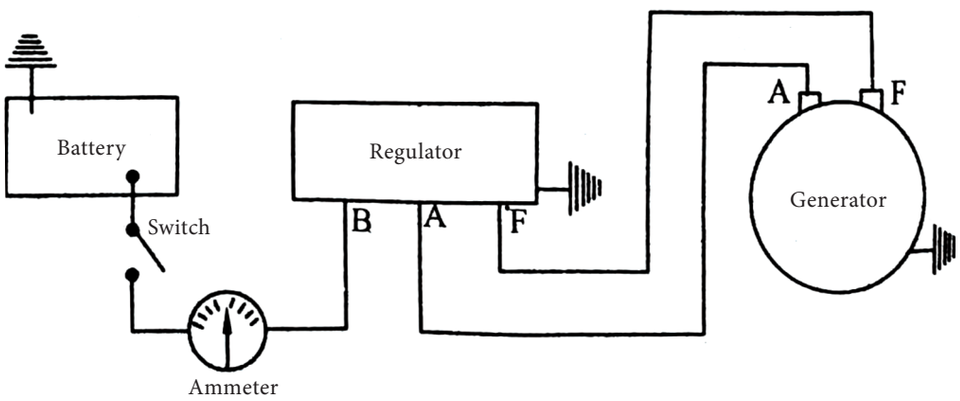

Figure 10.9 (b) Charging system

BAE_ENG_Chapter_10.indd 204 01/11/2022 12:01:35 PM

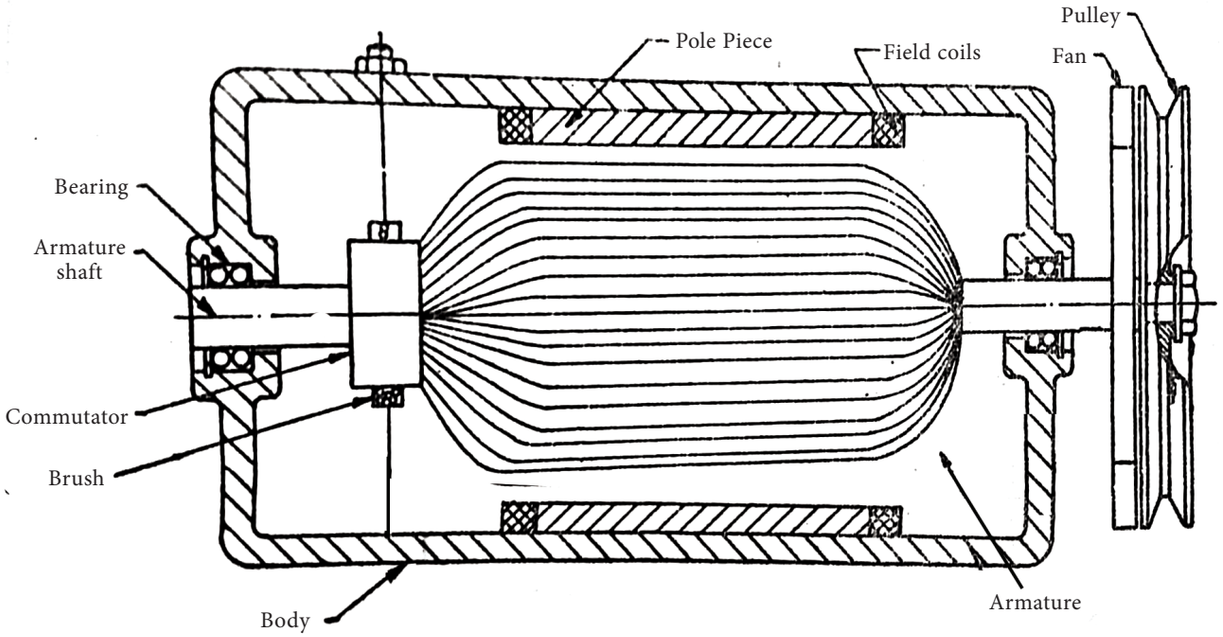

Figure 10.9.1 Dynamo (or) D.C. Generator

4. Brush
5. Pole shoe
6. Field coil

The engine crankshaft pulley drives the dynamo through a V – belt drive at two to three times crankshaft speed. Field coils are placed on each pole and are connected in series. Field coils produce an electromagnetic field and the armature conductors are rotated into the field. The armature cuts the magnetic fields and an emf is generated in the armature conductors. The commutator is to collect the current generated in armature conductors and DC is sent out through the carbon brushes.

10.9.2 Cut out relay

When the generator is operating, the cutout relay closes the circuit, permitting the battery to get charged. When the generator stops, it opens the circuit, thereby preventing the battery from discharging back through the generator.

It has two windings, namely shunt and series. It has an armature carrying the contact points. The armature is hinged and is kept away from the windings by a spring when the generator is not running.

Once the generator starts, a tension is imposed on two windings of the cutout relay. It produces the magnetic field which attracts the armature. As soon as the tension produced by the generator is of sufficient value to force the charge into the battery, the magnetism is strong enough to pull the armature down overcoming the spring tension. This makes the contact point closes and thereby completing the circuit between the generator and the battery. Thus, the battery gets charged.

When generator stops, the armature loses the magnetism and the spring tension on the armature pulls the contact point away, thereby opening the circuit between the battery and the generator.

BAE_ENG_Chapter_10.indd 205 01/11/2022 12:01:35 PM

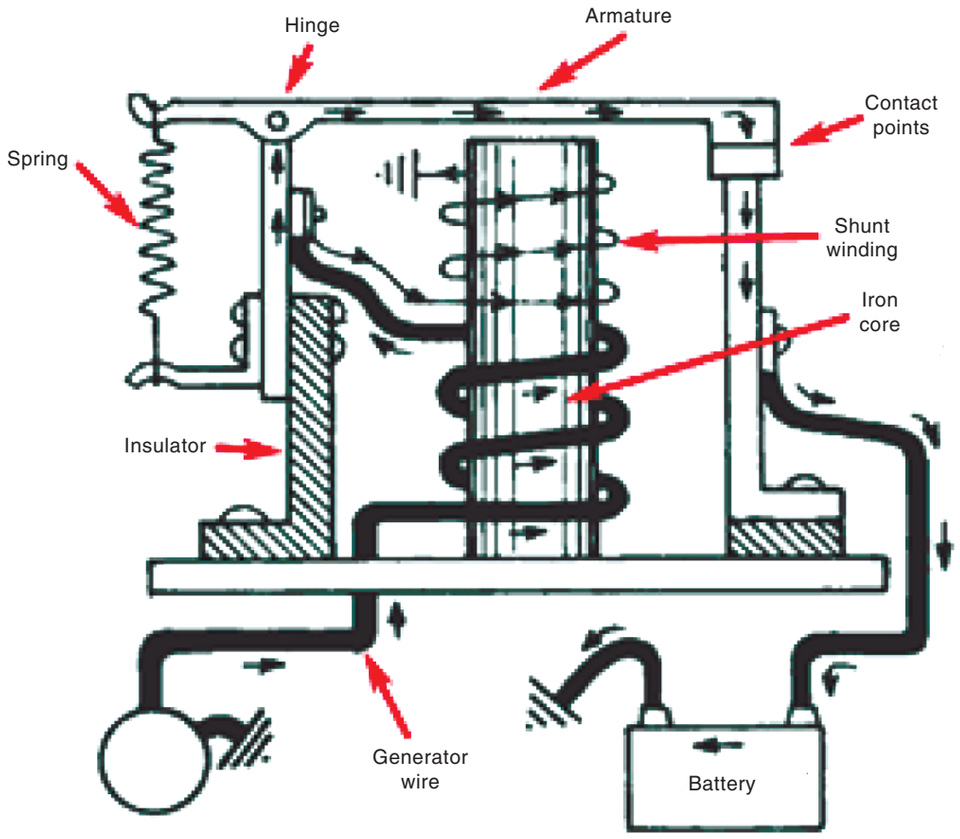

Figure 10.9.2 (a) Cut out relay

10.9.3 Alternator

The alternator converts mechanical energy from the engine into electrical energy. It is also called A.C. Generator. With the help of rectifiers formed by diodes, the Alternating Current (AC) is converted into Direct Current (DC) and stored in vehicle battery.

The rotor shaft usually consists of pole pieces with a field coil or winding between them. When the current flows through the winding, it becomes an electromagnet. Current flows in and out of the winding through two brushes riding on slip rings. Each slip rings connects to one end of the winding. The current produces a magnetic field which rotates as the rotor turned by engine crankshaft through a belt. The strength of the magnetic fields varies with the amount of the current flowing. The stationary loops or conductors are assembled into a laminated iron frame. The assembly is stator. As the rotating magnetic field cuts through the windings, an alternating current is induced in the stator. As the magnetic poles are changing for every half revolution, stator induces an alternating current for every revolution of the rotor.

Advantages

- Light in weight
- A high output is obtained even at low engine speed.
- The cutout relay is not needed.
- Long life.
- Highly reliable.

BAE_ENG_Chapter_10.indd 206 01/11/2022 12:01:35 PM

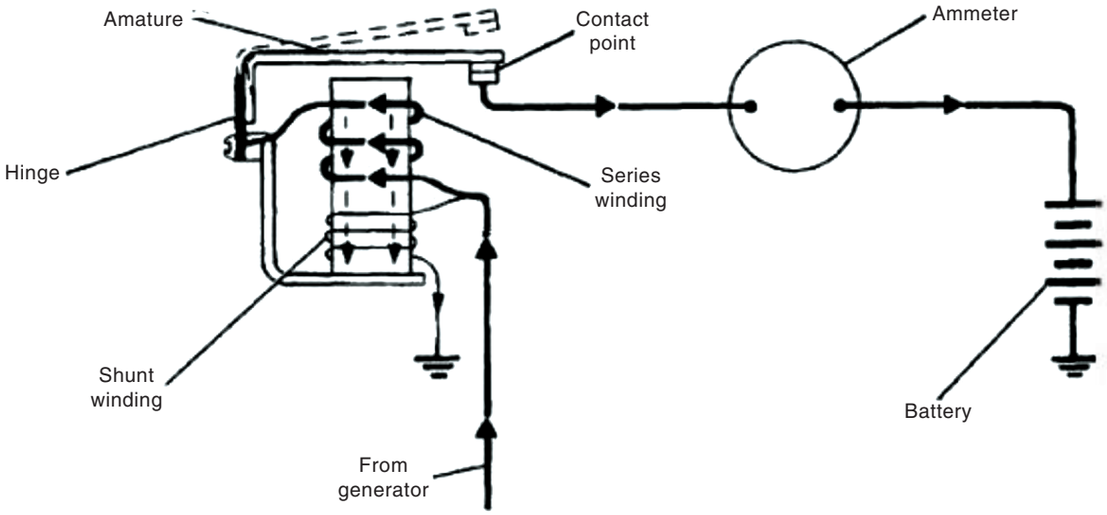

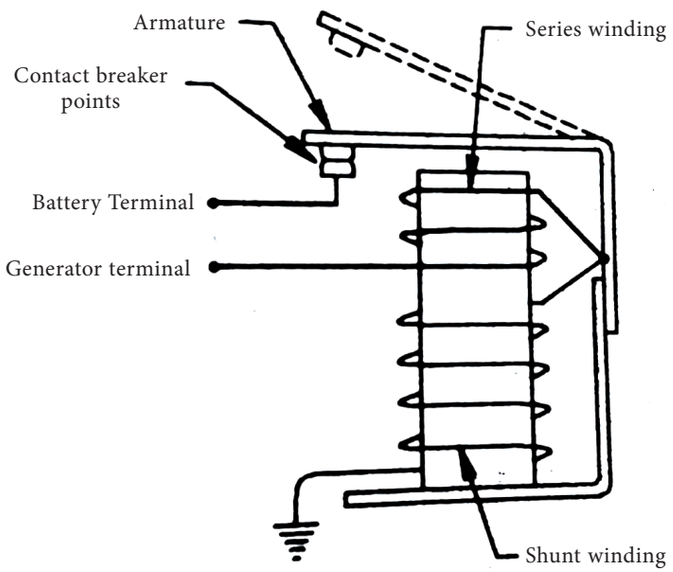

Figure 10.9.2 (b) Cut out Relay



Figure 10.9.3 Alternator

10.10 Lighting system

The automobile uses lighting system to provide illumination especially during night or light needed to safely operate the vehicle. The various lights provide vision and information to the driver, convenience for passengers, signals and warnings to other driver and pedestrians. Light means illumination.

BAE_ENG_Chapter_10.indd 207 01/11/2022 12:01:36 PM

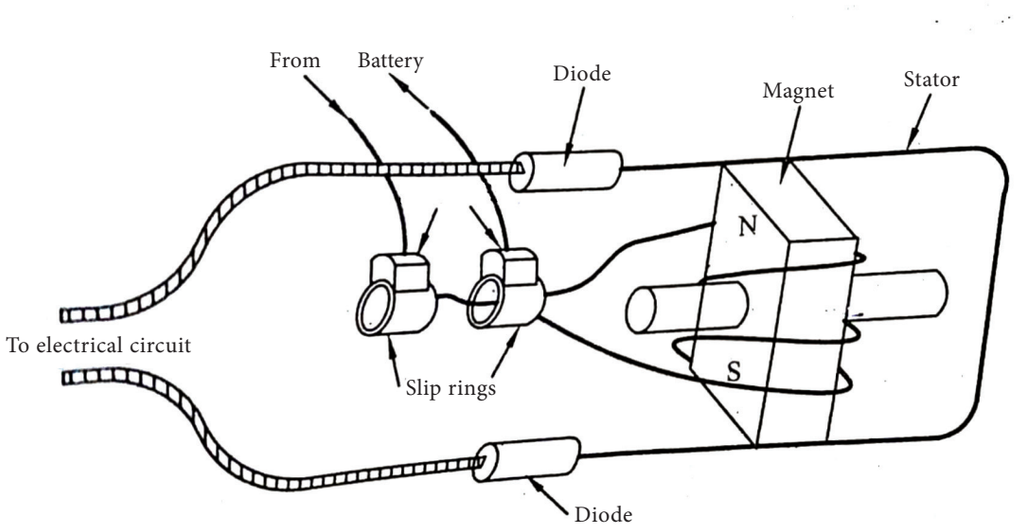

Figure10.9.3 Alternator

10.10.1 Important lights in a lighting system and its purpose

Sl. No.	Lights	Purpose
1	Head Lamps	To illuminate the road ahead at a reasonable distance with sufficient intensity during the night.
2	Tail Lamps	To show red at the rear of the vehicle. This gives an indication to the driver of the following vehicle.
3	Parking Lamps	To mark the front of a parked vehicle at night.
4	Fog Lamps	To illuminate the road ahead using yellow light during mist, winter season, hill station etc
5	Stop Lamps (or) Brake lamps	To indicate the application of brake to the following vehicle driver in order to slow down or stop the vehicle.
6	Direction indicating lamps	To indicate an intended change in direction by flashing light on the side towards which the turn will be made. The lamps are available in front and rear of the vehicle.
7	Panel Lamps	To illuminate the dashboard in order to see the readings indicating in various meters.
8	Interior Lamps	To illuminate the interior part/passenger compartment of the vehicle.
9	Reverse lamps	To illuminate the back of the vehicle and to indicate the reversing of the vehicle
10	Number Plate Lamps	To illuminate the number plate of the vehicle

BAE_ENG_Chapter_10.indd 208 01/11/2022 12:01:36 PM

10.10.2 Vehicle lighting circuit

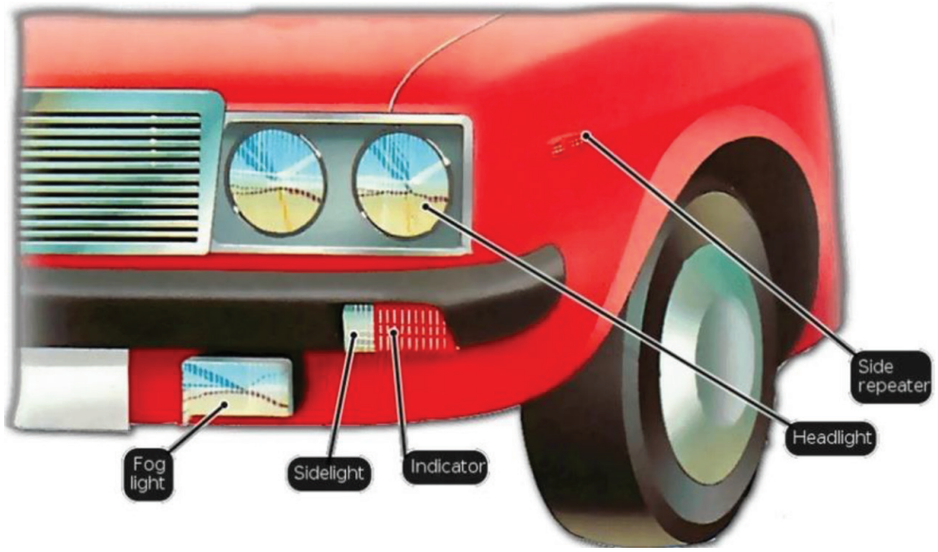

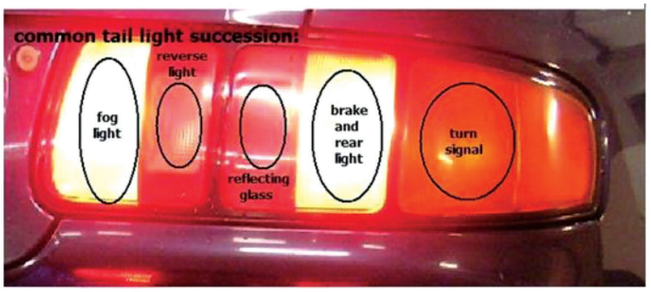

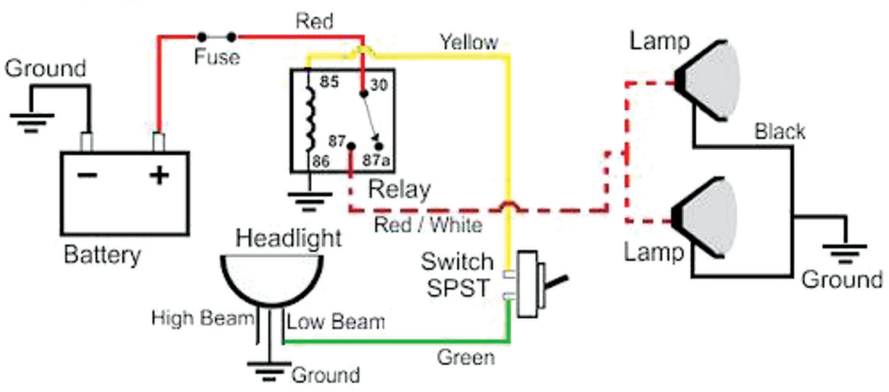





BAE_ENG_Chapter_10.indd 209 01/11/2022 12:01:36 PM

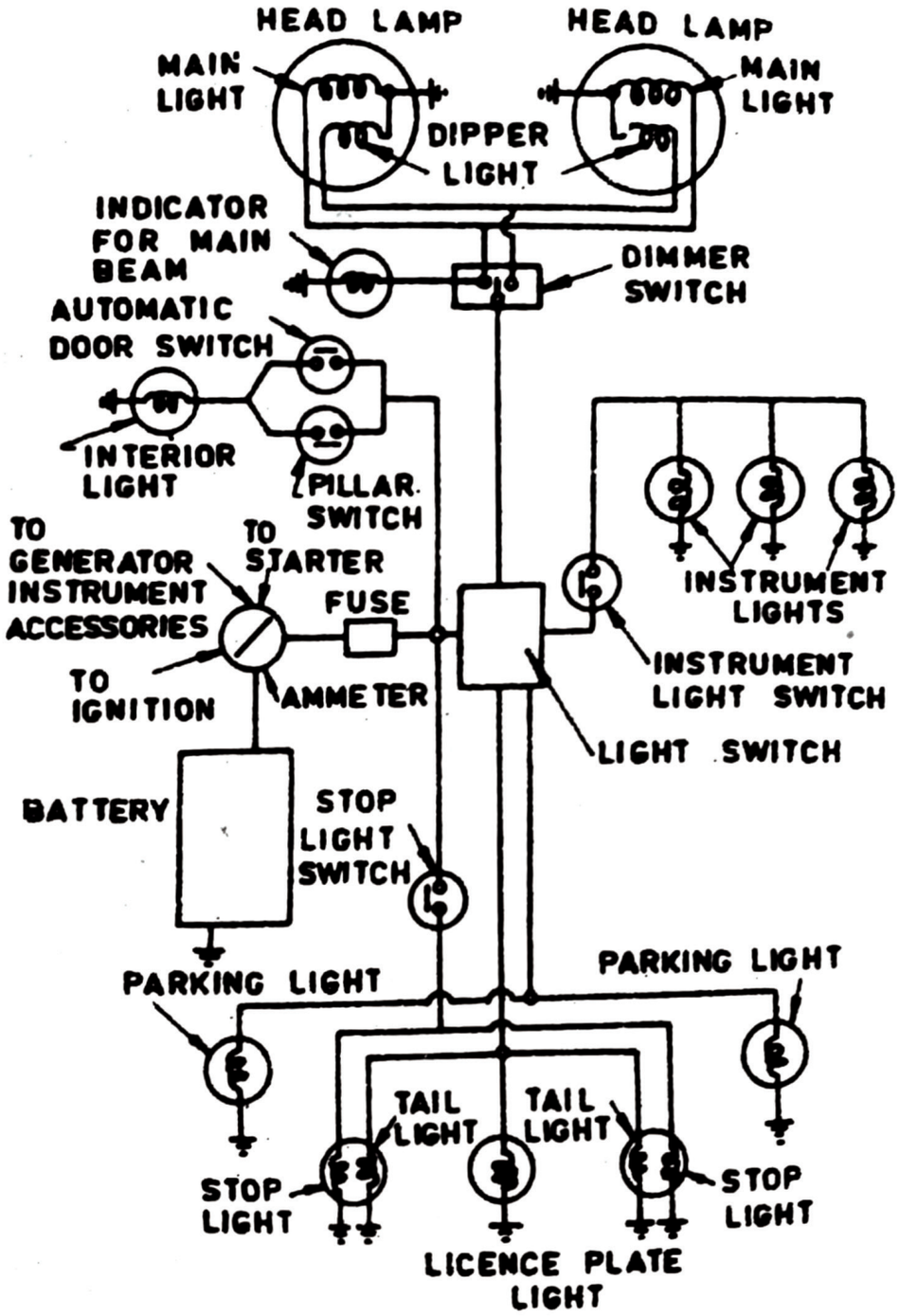

Figure 10.10.2 Lighting system

10.10.3 Direction indicating lamps

Lamps are provided at each front and rear corner of a vehicle. This allows the driver to signal an intention to turn left or right to the opposing vehicle as well as following vehicle. A lever operated turn switch is mounted in the steering column. The turn signal lever is moved up for a right turn and down for a left turn. A flasher unit is used to open and close the lighting circuit about 70 – 80

BAE_ENG_Chapter_10.indd 210 01/11/2022 12:01:37 PM

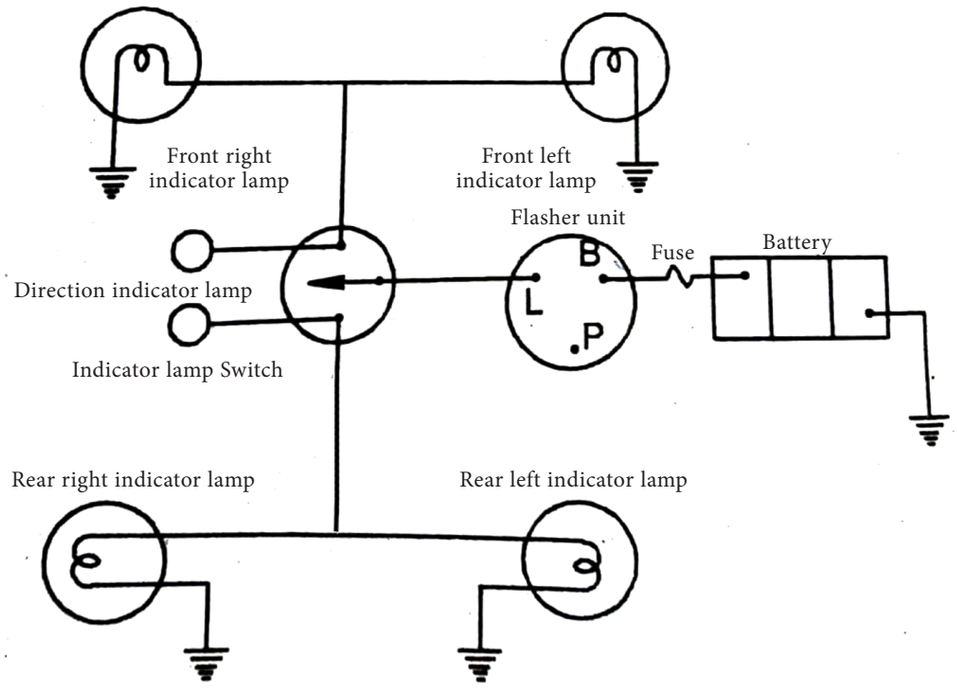

Figure 10.10.3 Directional signal circuit

times per minute to make more able to the other driver. After completing the turn, the return movement of the steering wheel automatically cancels the turn signal and the lever moves back to its neutral position, opening the circuit.

10.11 Wind Screen Wiper

Windshield wipers clean the windshield so that the driver can see clearly while driving on rain or snow or dirt on the windshield. The wipers are operated by an electric motor.

The electric motor drives the worm. Worm drive the worm wheel. The drive to the blades is transmitted via a shaft and rotary link assembly. It is incorporated with a special limit switch to ensure consistent parking of the wiper arms and blades in the correct position. The windshield wiper switch has atleast two or three speeds. Many cars have intermittent windshield wipers. These include an adjustable time delay between blade movements. The wiper blades will move across and back, pause and then repeat the action.

A windshield washer is part of the windshield wiper system. When the driver presses a button, liquid windshield washer fluid squirts on the windshield. This allows the blades to clean more effectively.

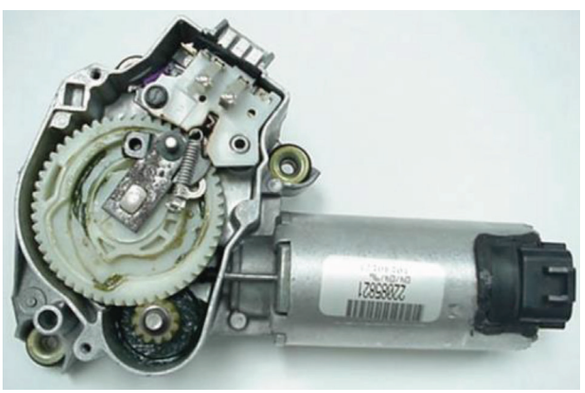

BAE_ENG_Chapter_10.indd 211 01/11/2022 12:01:37 PM

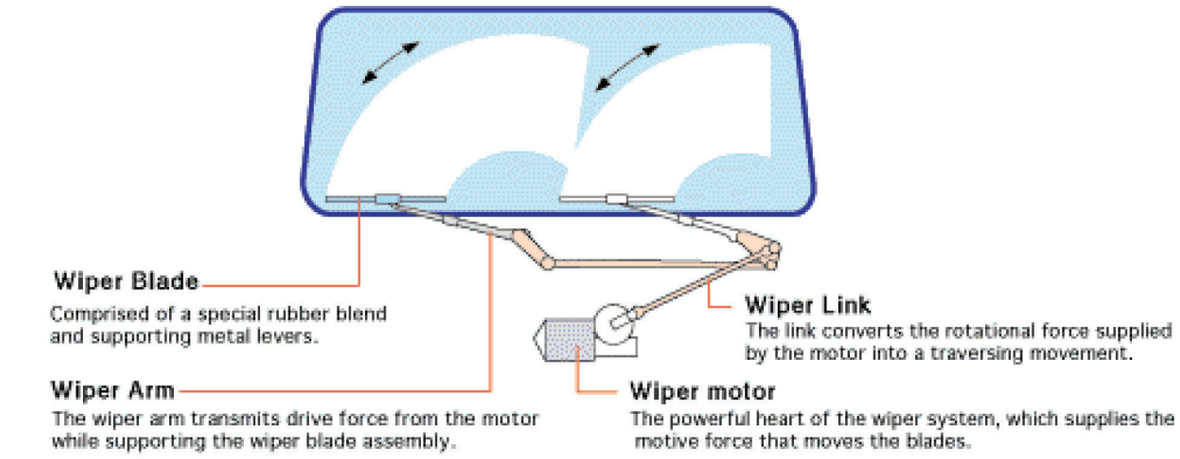

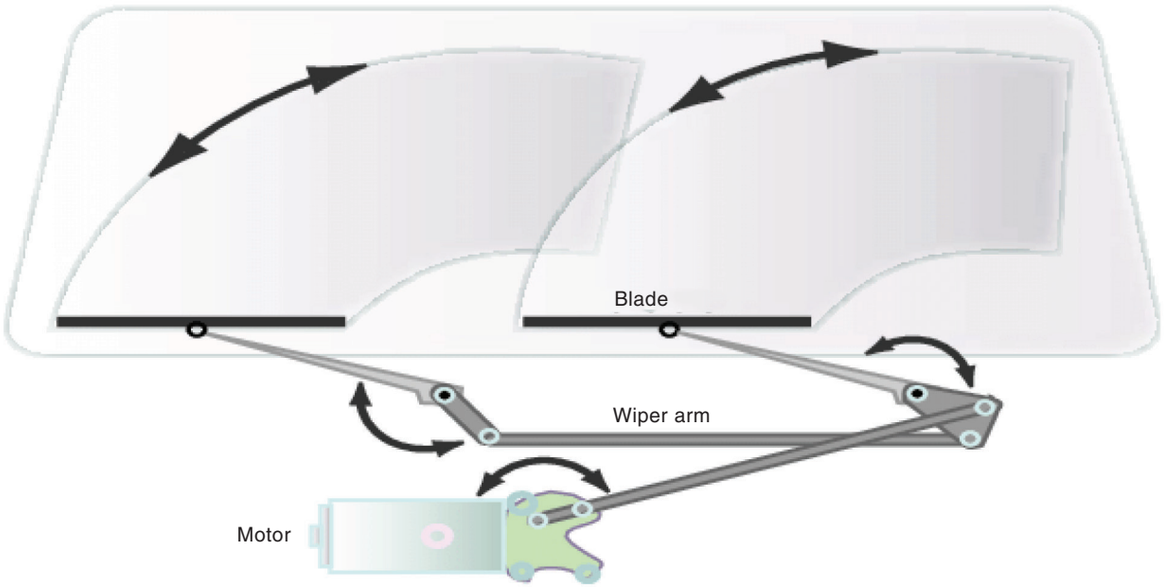

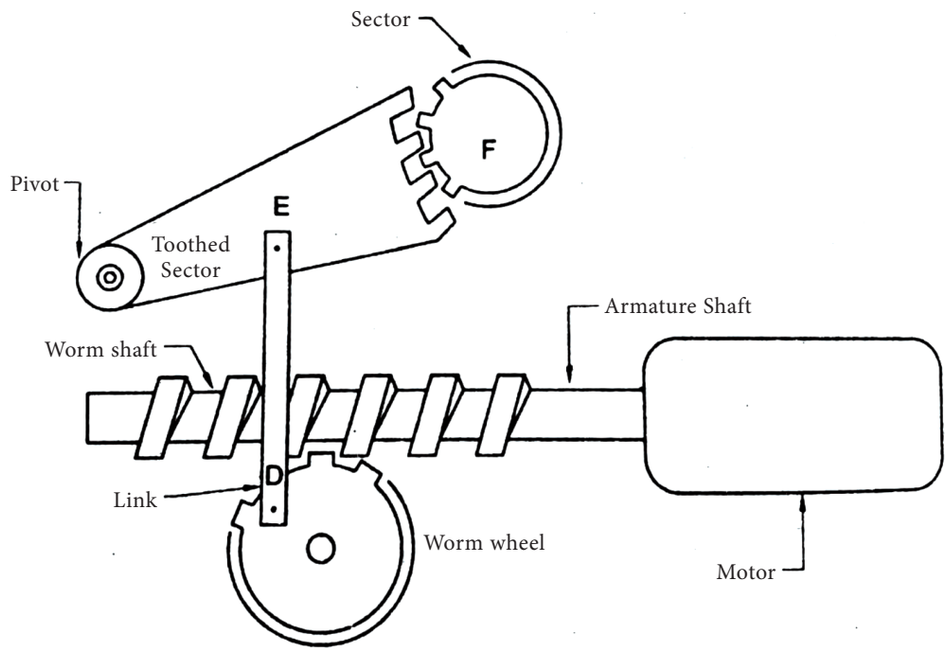

Figure 10.11 Wind screen wiper

BAE_ENG_Chapter_10.indd 212 01/11/2022 12:01:37 PM

10.12 Air conditioning system

The passenger is like to travel with comfort. During the winter season, passenger prefers mild heating and during the summer season, passenger prefers cooling. To achieve this, the system which is to provide both the conditions is called an airconditioning system.

10.12.1 Construction and working principle of vehicle air conditioning system

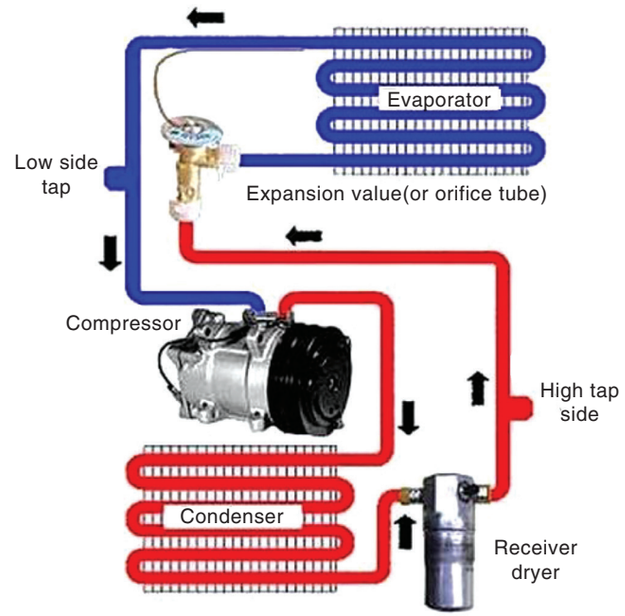

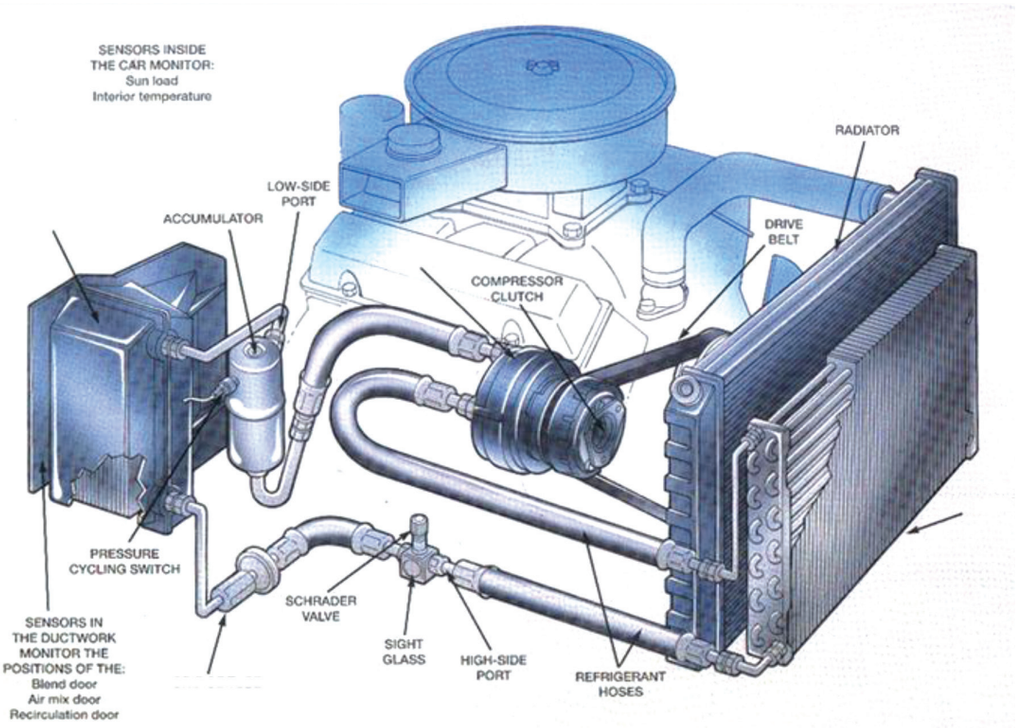

Figure 10.12.1 (a) Air conditioning System

BAE_ENG_Chapter_10.indd 213 01/11/2022 12:01:38 PM

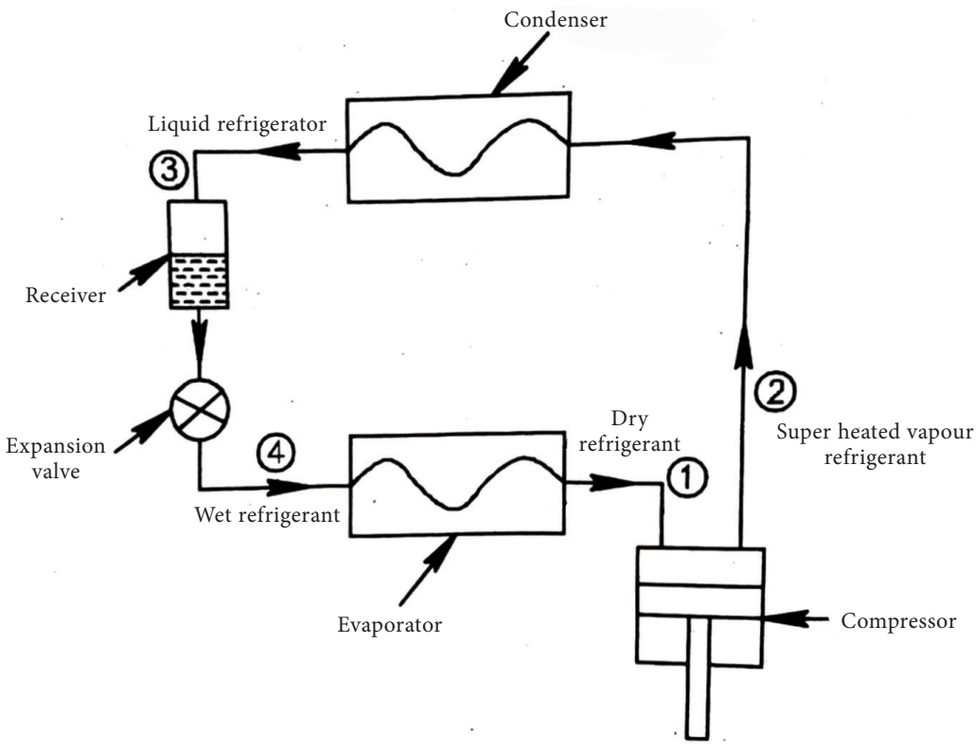

Figure 10.12.1 (b) Simple steam air conditioning system

Important parts of a vehicle airconditioning system

1. Compressor
2. Condenser
3. Receiver/driver
4. Thermostatic Expansion Valve
5. Evaporator
6. Refrigerant
7. Lines and Hoses

The compressor is driven by the engine by means of belt drive. The compressor receives the low pressure, low-temperature vapour refrigerant from the evaporator. This refrigerant is compressed to high pressure, high-temperature vapour refrigerant by the compressor. This refrigerant is sent into the condenser where it is condensed into liquid refrigerant by a constant temperature process.

This liquid refrigerant is expanded in the expansion valve where it is converted into the low-pressure low-temperature liquid refrigerant. This refrigerant is sent into the evaporator, where it receives the heat energy from the passenger compartment and converted into vapour refrigerant, there by cooling effect is obtained. This vapour refrigerant is again sent into the compressor and the cycle is continued. This airconditioning system controls the temperature, humidity, ventilation and dust level simultaneously.

BAE_ENG_Chapter_10.indd 214 01/11/2022 12:01:38 PM

10.13 Troubleshooting, causes and remedies in the ignition system

1. Engine Misfiring

Sl.No.	Cause	Remedy
1.	Spark plug faulty	Clean, regap or replace the spark plug
2.	Loose electrical wiring	Tighten, clean the wires
3.	Late ignition timing	Correct ignition timing
4.	Wear and tear of contact breaker point	Replace
5.	Faulty ignition coil	Replace

2. Engine does not start

Sl.No.	Cause	Remedy
1.	Cable lose, corroded, open terminal	Tight, repair as needed
2.	Defective ignition switch	Replace
3.	Faulty condenser	Rectify
4.	Defective contact breaker points	Rectify
5.	Low voltage in the battery	Charge the battery

10.14 Troubleshooting, causes and remedies in Starter Motor

1. Starter motor does not start

Sl.No.	Cause	Remedy
1.	Low voltage in the battery	Charge the battery
2.	Burned coil / winding	Replace
3.	Faulty starting switch	Rectify
4.	Faulty armature	Repair or replace
5.	Dust on sleeve or pinion	Clean the parts

Student Activity

1. Students are advised to submit a detailed report based on the visit to the nearest service station to study the service of various electrical components such as a battery, ignition coil, condenser, spark plug etc.
2. Students are asked to prepare and submit a detailed report with appropriate sketches on the starting system, charging system and lighting system based on the visit to the nearest service station.

BAE_ENG_Chapter_10.indd 215 01/11/2022 12:01:38 PM

Glossary

1.	Battery	–	மின்கலம்
2.	Primary Winding	–	பிரதம மின் சுற்று அல்லது முதல் நிலை மின் சுற்று
3.	Secondary Winding	–	துணை மின் சுற்று அல்லது இரண்டாம் நிலை மின் சுற்று
4.	Circuit	–	மின் சுற்று
5.	Electrolyte	–	மின்னாற் பகுபொருள்
6.	Electrical Energy	–	மின் ஆற்றல்
7.	Mechanical Energy	–	இயக்க ஆற்றல்
8.	Ignition or Induction Coil	–	தூண்டு சுருள்
9.	Magnetic Field	–	காந்த புலம்
10.	Condensor	–	மின் தேக்கி
11.	Distributor	–	பகிர்வி
12.	Spark Plug	–	மின் பொறிக்கட்டை
13.	Illumination	–	வெளிச்சம்
14.	Generator	–	மின்னாக்கி
15.	Contact Breaker Points	–	தடை செய்யும் முனைகள்

References

1. S.K. Gupta, A Text Book of Automobile Engineering, S. Chand and Company, New Delhi, ISBN 978-93-837-4691-0, First Edition 2014, Reprint 2016.
2. Automobile Engineering, 2nd Edition, Sci Tech Publications (India) Pvt Ltd, 2011. Ramalingam. K.K.
3. Kirpal Singh, Automobile Engineering, Vol 1, Standard Publisher and distributor, ISBN – 13 – 978-8180141966
4. Jack Erjavec- Automotive Technology_ A Systems Approach -Delmar Cengage Learning (2009) ISBN-13: 978-1428311497
5. James D. Halderman, Automotive Technology, Principles, Diagnosis and service, fourth Edition, 2012, Prentice Hall, ISBN - 3: 978-0-13-254261-6
6. K.K.Jain and R.B.Asthana, Automobile Engineering, Tata McGraw-Hill Publishing Company Limited, New Delhi
7. R.K.Rajput, A Text Book of Automobile Engineering, Laxmi Publications, New Delhi.
8. A.K. Babu & Er. Ajit Pal Singh, Automobile Engineering, S.Chand Publishing, New Delhi
9. Internal Combustion Engines by V. Ganesan, Tata McGraw-Hill Education, 2004
10. Automotive Mechanics by William Crouse, Donald Anglin

BAE_ENG_Chapter_10.indd 216 01/11/2022 12:01:38 PM

Webliography

1. https://www.searsauto.com/car-care-101/different-types-of-batteries-for-your-car
2. https://www.epectec.com/batteries/charging/
3. http://www.manbat.co.uk/news/how-do-car-batteries-work/
4. http://www.secondchancegarage.com/public/91.cfm
5. http://www.t3atlanta.com/blog/car-tips/types-of-spark-plug-materials/
6. https://www.samarins.com/glossary/starter.html
7. https://www.howacarworks.com/basics/how-the-charging-system-works
8. https://www.hella.com/techworld/uk/Technical/Automotive-lighting/Basic-principles-of-car-lighting-technology-220/
9. https://www.cars.com/auto-repair/glossary/wiper-motor/
10. http://www.mech4study.com/2015/09/car-air-conditioning-system.html

Evaluation

KT4C5

PART - A

One mark questions

Choose the correct answer

1. _____ is called as the heart of an automotive electrical system.
   a. Battery
   b. Dynamo
   c. Spark plug
   d. Contact breaker points

2. A positive terminal and a negative terminal forms a _____
   a. Rotor
   b. Cell
   c. Battery
   d. Coil

3. The number of types of an ignition coil _____
   a. 2
   b. 3
   c. 4
   d. 5

4. The gap between the central electrode and ground electrode of a spark plug is
   a. 5 mm to 10 mm
   b. 10 mm to 20 mm
   c. 30mm to 50 mm
   d. 0.5mm to 0.7mm

5. In the starting system, the starter motor is engaged with flywheel through _____
   a. Valve
   b. Armature

BAE_ENG_Chapter_10.indd 217 01/11/2022 12:01:38 PM

c. Pinion
d. Coil

6. Which of the following is used to convert mechanical energy into electrical energy?
   a. Motor
   b. Generator
   c. Regulator
   d. Camshaft

7. The illumination is related to _____
   a. Light
   b. Sound
   c. Motion
   d. Temperature

8. The number of types of the ignition system is _____
   a. 2
   b. 3
   c. 4
   d. 5

9. The ratio of acid and water in an electrolyte solution is _____
   a. 1:3
   b. 3:1
   c. 4:1
   d. 1:4

10. The ignition coil is also called as _____
    a. Step up transformer
    b. Battery
    c. Spark plug
    d. Rotor

PART - B

Three marks questions

1. List out the various electrical system in an automobile?
2. State the use of condenser in an ignition system?
3. List out the advantages of an electronic ignition system.
4. Why spark plug is used?
5. List out the various types of starter motor drive mechanism.
6. What do you mean by ignition advance?
7. Write short notes on air conditioning?
8. Identify the reason for more noise in a generator?

PART - C

Five marks questions

1. Draw neatly and indicate the various parts of a battery.
2. State the difference between coil ignition system and Magento ignition system?

BAE_ENG_Chapter_10.indd 218 01/11/2022 12:01:38 PM

3. Highlight the maintenance requirements of a starter motor.
4. Draw the headlamp circuit used in an automobile and indicate the parts.
5. With the aid of a neat sketch, explain the construction of an ignition switch.
6. Draw the layout of a vehicle air conditioning system and indicate the parts.

PART - D

Ten marks question

1. Explain the construction and working principle of a battery coil ignition system with a neat sketch.
2. Describe the construction and working principle of an electronic ignition system with a neat sketch.
3. Illustrate the working principle of Bendix drive mechanism with neat sketch.
4. With the aid of a neat sketch, explain the construction and working principle of an alternator.
5. Explain the various lights and its purposes that are used in an automobile.

BAE_ENG_Chapter_10.indd 219 01/11/2022 12:01:38 PM

Model Question Paper (Mark Evaluation) +2 Basic Automobile Engineering Vocational Theory

Theory Marks – 90	Internal Assessment Marks – 10	Total Marks – 100

Part – A	Choose the best answer	15 × 1=15
Part – B	Answer the following Questions (Answer any 10 out of 13 Questions)	10 x 3 = 30
Part – C	Answer the following Questions (Answer any 5 out of 7 Questions)	5 x 5 = 25
Part – D	Answer all the Questions (Either or Type)	2 x 10 = 20

+2 Model Question Paper (English Medium)

(Theory Marks : 90)

Part – A

Choose the correct Answer

Answer all the questions. **15 × 1 = 15**

1. The Transmission system which has good road grip is,
   a. Front engine rear wheel drive
   b. Rear engine rear wheel drive
   c. Front engine front wheel drive
   d. Front engine four wheel drive

2. Types of Multiplate clutch
   a. 3 b. 4
   c. 2 d. 5

3. In which type of clutch, there is no need of clutch pedal?
   a. Single plate clutch
   b. Multiplate clutch
   c. Diaphragm clutch
   d. Centrifugal clutch

4. Which type of lubricating oil is used in gear box?
   a. S.A.E 30
   b. S.A.E 40
   c. S.A.E 90
   d. S.A.E 120

BAE_ENG_MQ.indd 220 01/11/2022 12:23:45 PM

5. Top Gear ratio is
   a. 1:2
   b. 2:1
   c. 1:1
   d. 3:1

6. Which device is used to adjust the angle Variation and transmit the power?
   a. Propeller shaft
   b. Sliding joint
   c. Differential
   d. Universal Joint

7. Tyre strength is indicated by
   a. Bead
   b. Tread
   c. Ply rating
   d. side wall

8. Brake shoes are made up of
   a. Asbestos
   b. Aluminium alloy
   c. Steel Alloy
   d. Copper

9. Which type of brake is mostly used in cars?
   a. Vaccum brake
   b. Hydraulic brake
   c. Mechanical Brake
   d. Air Brake

10. The up and down movement of the vehicle is called
    a. Rolling b. Skidding
    c. Bouncing d. Pitching

11. Caster angle is
    a 1o to 2o b. 2o to 4o
    c. 3o to 4o d. 2o to 3o

12. Back bone of the vehicle is
    a. Chassis frame b. Body
    c. Engine d. Gear box

13. The number of turns in the primary winding of the ignition coil is
    a. 100 to 150
    b. 150 to 300
    c. above 400
    d. 600 to 700

14. How does the dynamo (or) Generator get the drive?
    a. connecting rod
    b. Piston
    c. Engine Crank shaft
    d. Engine Cam shaft

15. The part used to connect front axle and stub axle is
    a. Piston pin
    b. King pin
    c. Cotter pin
    d. Circlip

Part – B

Answer any ten Questions. Question number 25 is compulsory $10 \times 3 = 30$

16. Explain Air Resistance.

17. What are the advantages of diaphragm clutch?

18. What are the types of gear box?

19. What are the types of rear axle Shaft?

20. What is the effect of low tyre pressure?

BAE_ENG_MQ.indd 221 01/11/2022 12:23:45 PM

21. What are the properties of brake fluid?

22. What are the advantages of Anti – lock – brake system?

23. What are the types of shock absorber?

24. Define – steering ratio.

25. Define – wheel base.

26. What is the use of cut out unit?

27. What is the use of condenser?

28. State any three types of clutch.

Part - C

Answer any five questions. Question number 33 is compulsory $5 \times 5 = 25$

29. Draw and explain briefly the front engine Rear Wheel drive transmission system.

30. Draw and mark the parts of propeller shaft.

31. What are the advantages and disadvantages of independent suspension system?

32. What are the requirements of vehicle body?

33. Draw and label the parts of head lamp circuit.

34. What are the reasons and remedies for clutch slip?

35. What are the advantages and dis – advantages of power steering?

Part – D

Answer all the Questions $2 \times 10 = 20$

36. Explain the construction and working of single plate clutch with neat sketch

(Or)

Draw and explain the construction and working of differential unit.

37. Explain the construction and working of battery coil ignition system with neat sketch

(Or)

Explain the construction and working of master cylinder with neat sketch

BAE_ENG_MQ.indd 222 01/11/2022 12:23:45 PM

+2 – Basic Automobile Engineering - Practical

Contents

S. No.	Practical Unit	Page. No.	Month
1	Clutch Unit	224	June
2	Gear Box	228	
3	Differential	231	July
4	Steering Gear Box	235	
5	Master Cylinder	239	August
6	Wheel Cylinder	243	
7	Shock Absorber	247	September
8	Self Starter Motor	250	October
9	Dynamo	254	
10	Battery	258	November

BAE_Practical.indd 223 01/11/2022 12:25:27 PM

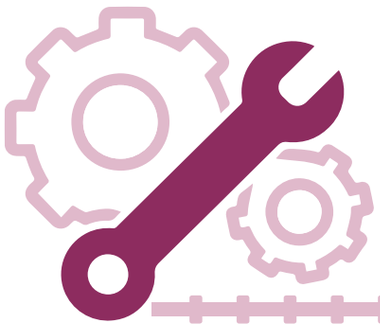

Practical – 1
Clutch Unit

Aim:

Dismantling, inspecting and assembling the given clutch.

Equipments:

Given Clutch

Tools Required:

1. Box Spanner
2. Arber press
3. Reverting machine
4. Spring Tester
5. Long nose pliers
6. Double end spanner

Materials Required

1. Cotton waste
2. Kerosene
3. Petrol
4. Emery sheet
5. Metal tray

Reason for dismantling:

- Clutch is not disengaged when the clutch pedal is pressed.
- Difficult to press the clutch pedal.
- More noise in clutch.
- Vehicle speed is low even engine is in good condition.
- Manufacturer POI (Pencil of Inspection)

BAE_Practical.indd 224 01/11/2022 12:25:27 PM

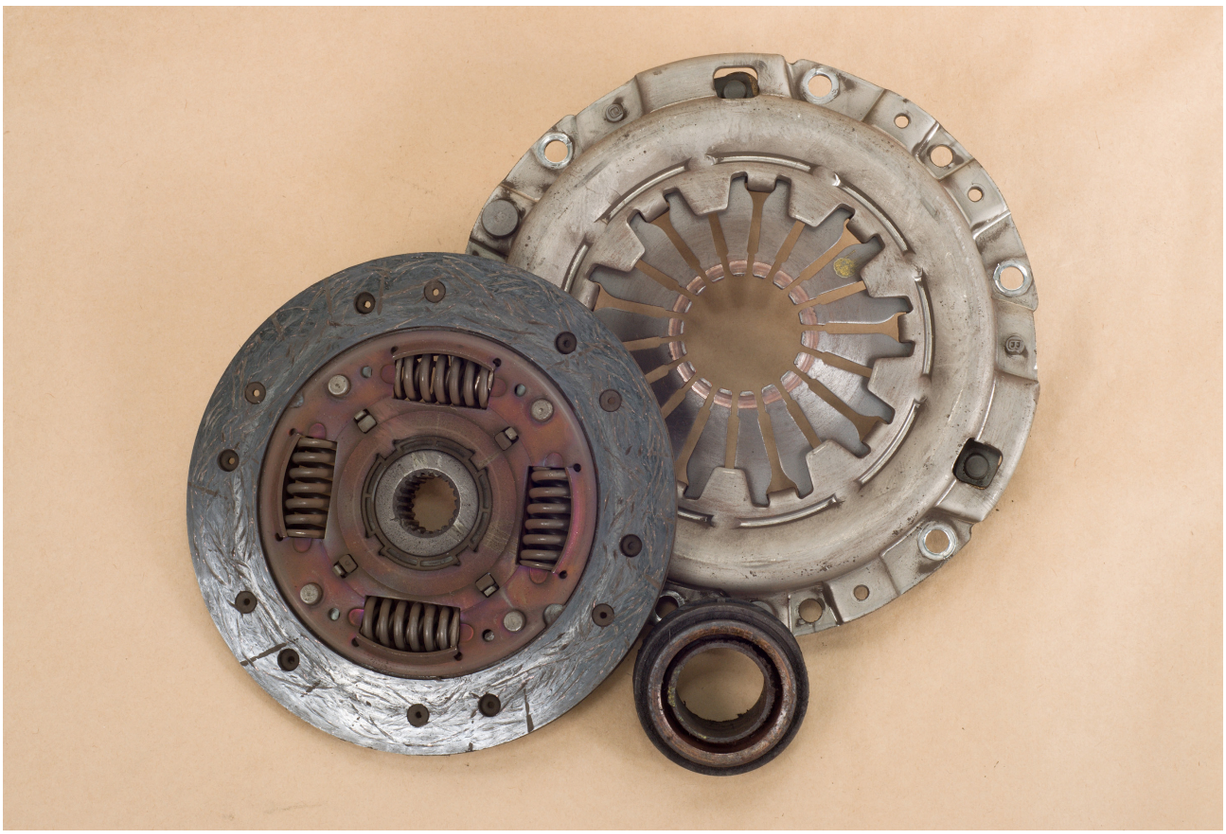

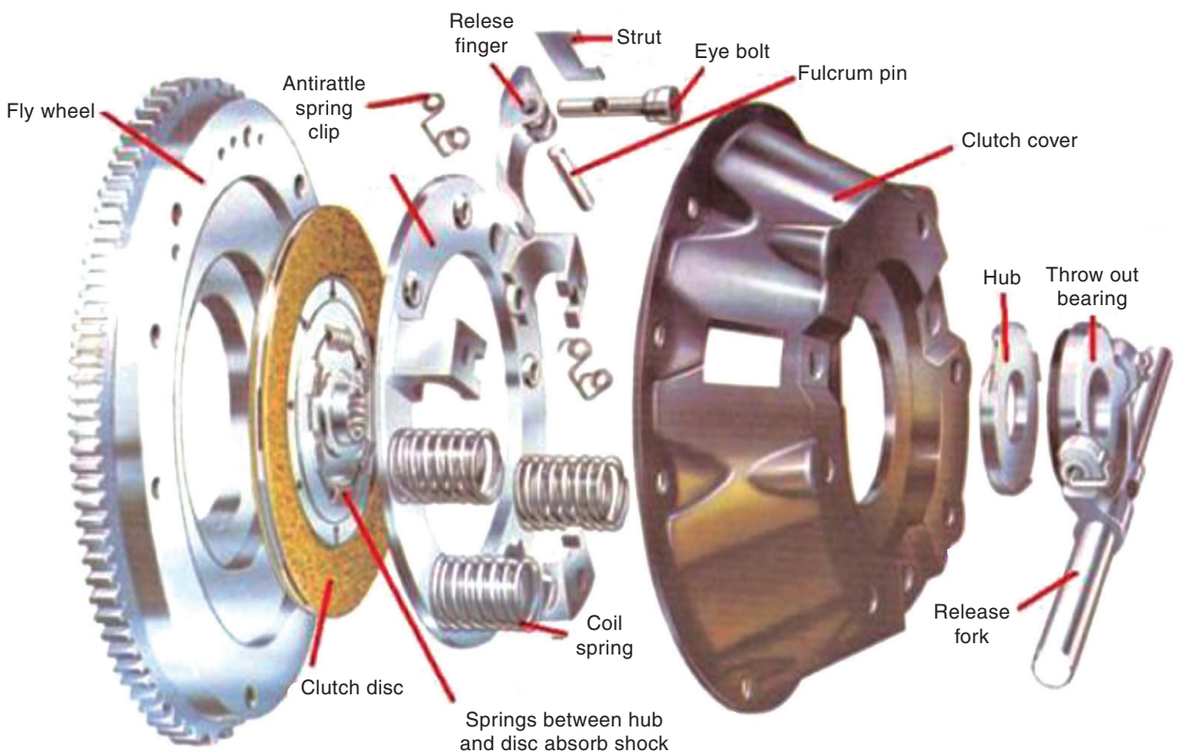

Single plate clutch

BAE_Practical.indd 225 01/11/2022 12:25:28 PM

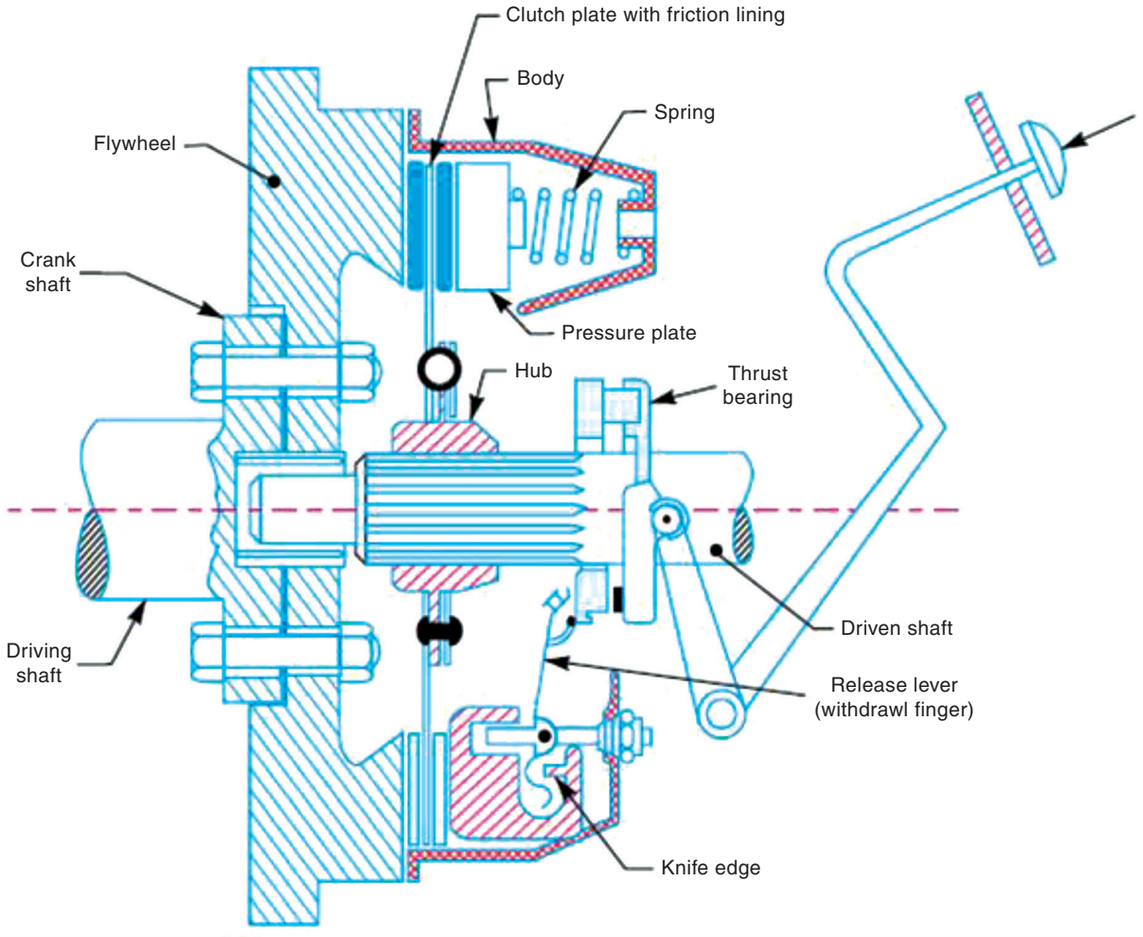



BAE_Practical.indd 226 01/11/2022 12:25:30 PM

Dismantling:

- Remove the universal joint bolts, center bed bolts, propeller shaft assembly and speedometer cables from the gear box.
- Remove clutch fork connection, gear box, clutch mounting bolts.
- Remove the gear box from the vehicle with the help of rope.
- Place the clutch in the Arber press and remove the clutch casing bolts.
- Remove pressure springs, release lever finger, pressure plate, clutch plate and etc…

Inspection:

- Inspect the clutch plate, pressure plate, linings, release lever, pressure spring, bolt, nuts, washer and etc… for any damage.
- Check the release lever spring tension it is more than 5 pounds replace by new one.
- Check the coil spring length before and after compression by using coil spring tester.
- Check the clutch free pedal play.

Assembling

- Assembling is the reversing process of dismantling.
- Place the clutch cover on the fly wheel and tighten the bolts. [Marking on clutch cover and flywheel should be in coincide].
- Check the clutch and gear box is working properly.

Result:

Thus the given clutch unit was dismantled, inspected and reassembled.

BAE_Practical.indd 227 01/11/2022 12:25:30 PM

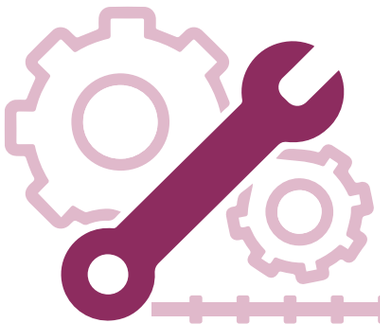

Practical – 2
Gear box

Aim:

Dismantling, inspecting and assembling the given gear box.

Equipments:

Given Gear box

Tools Required

1. Ring spanner
2. Double end spanner
3. Screw driver
4. Ball pein hammer
5. Drift punch
6. Wooden hammer

Materials Required:

1. Cotton waste
2. S.A.E 90 oil
3. Metal tray
4. Grease
5. Kerosene

Reasons for Dismantling

- Gear slip
- More noise in neutral position
- Difficult to operate gear shifting lever
- Gear changing is very hard
- Manufacturer POI is over

BAE_Practical.indd 228 01/11/2022 12:25:30 PM

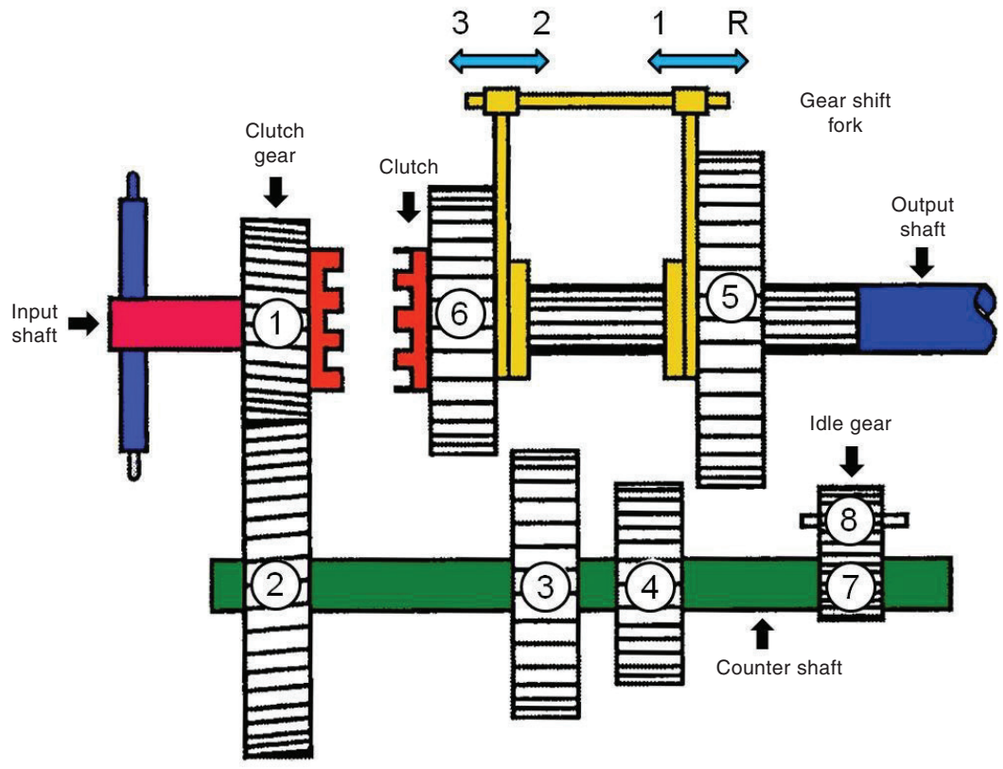

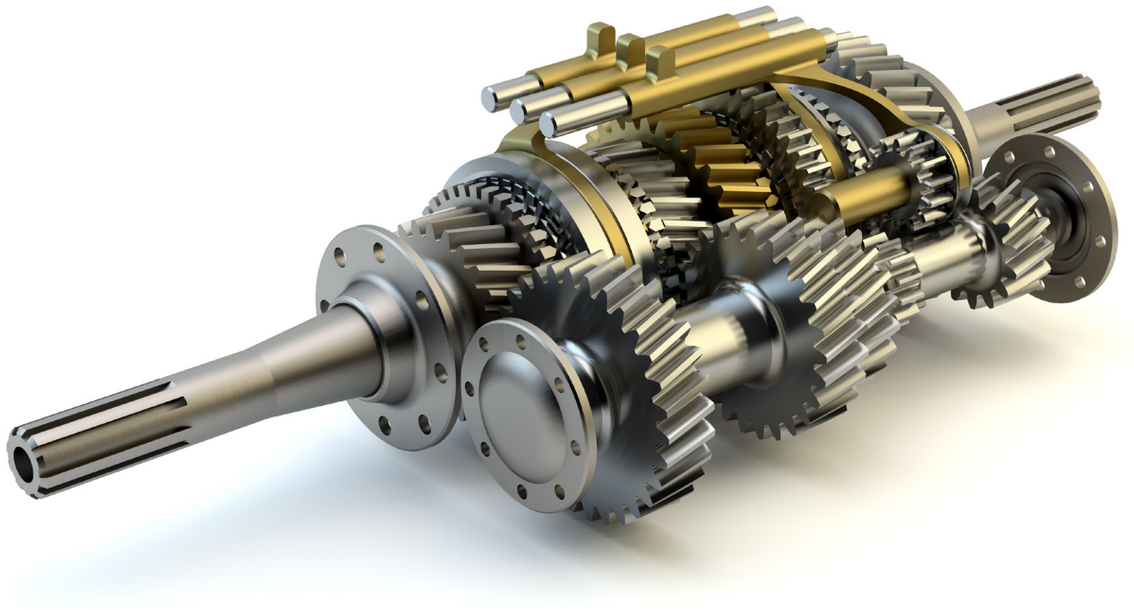

BAE_Practical.indd 229 01/11/2022 12:25:31 PM

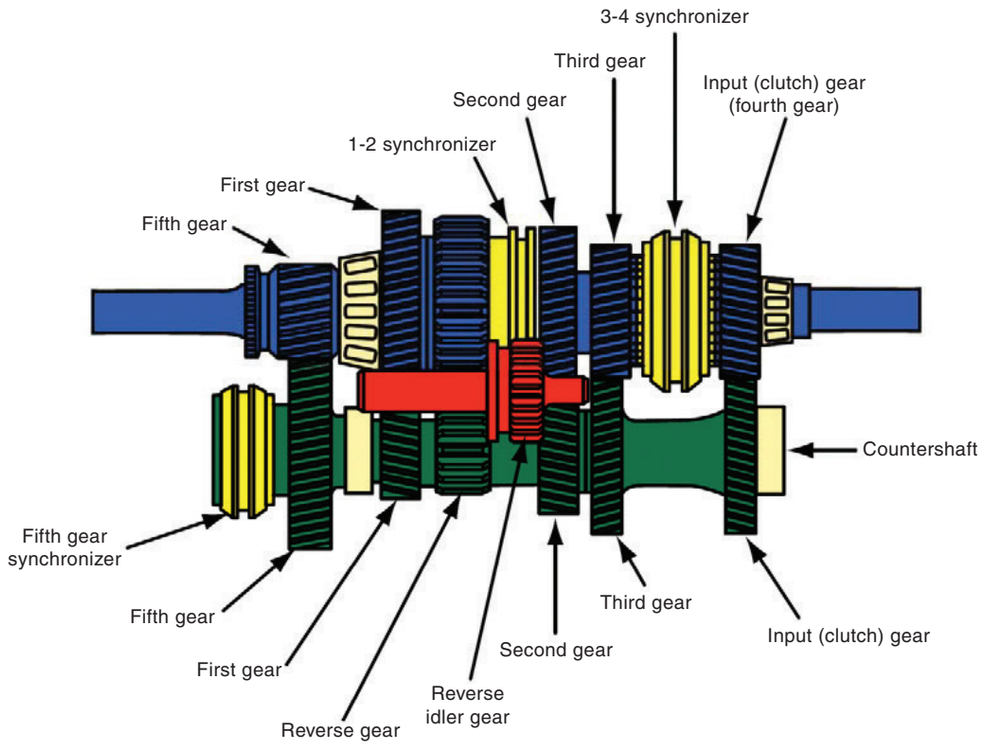

Speed	Gear Ratio
First gear	7:1
Second gear	3:3:1
Third gear	1:7:1
Top gear	1:1

Dismantling procedure:

- Remove the gear box from the vehicle and place it on the work bench.
- Drain the gear box oil.
- Remove the gear shifting lever, selector rod mechanism, end cover, bearings, main shaft gears, main shaft, clutch shaft with gear, counter shaft and etc…

Inspection:

- Clean all the pants.
- Clean the gear box casing and inspect for any damage.
- Check the main shaft, gears, counter shaft gears and clutch gear for any damage and replace the new one if any damage.
- Check the clutch shaft, main shaft and counter for any damage.

Assembling:

- Assembling is the reverse process of dismantling.

Result:

Thus the given gear box was dismantled, inspected and reassembled.

BAE_Practical.indd 230 01/11/2022 12:25:31 PM

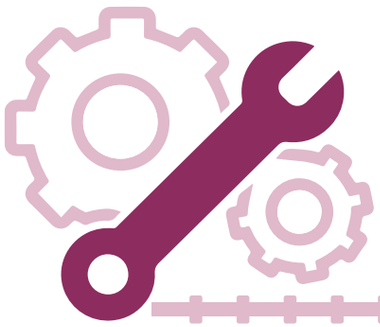

Practical – 3
Differential

Aim:

Dismantling, inspecting and assembling the given differential.

Equipment:

Given differential unit.

Tools Required:

1. Ring spanner
2. Double ended spanner
3. Copper hammer
4. Iron hammer
5. Drift punch

Materials Required:

1. Cotton waste
2. S.A.E 90 oil
3. Metal tray
4. Grease
5. Kerosene
6. Degreaser

Reasons for Dismantling:

- More noise in differential
- Rear wheel rotate in low speed
- Rear wheel does not turns easily
- Low power transmits to rear wheel
- Manufacturer POI is over.

BAE_Practical.indd 231 01/11/2022 12:25:31 PM

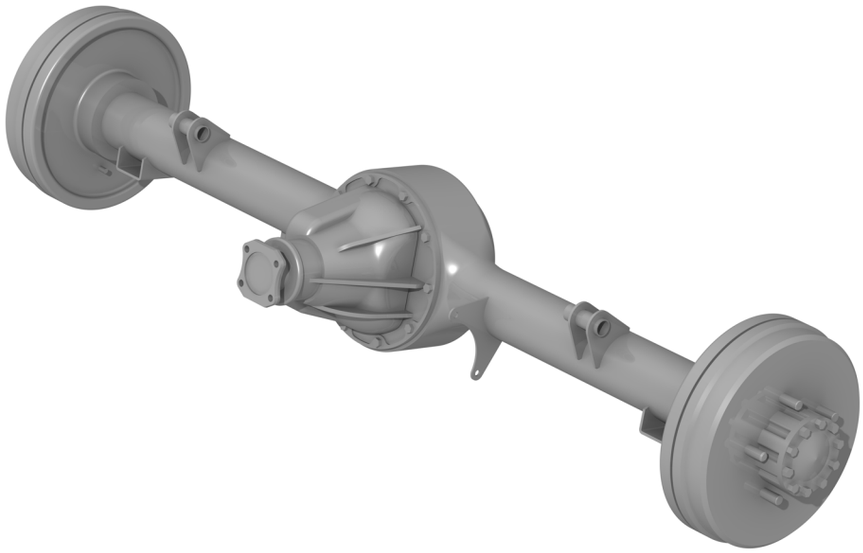

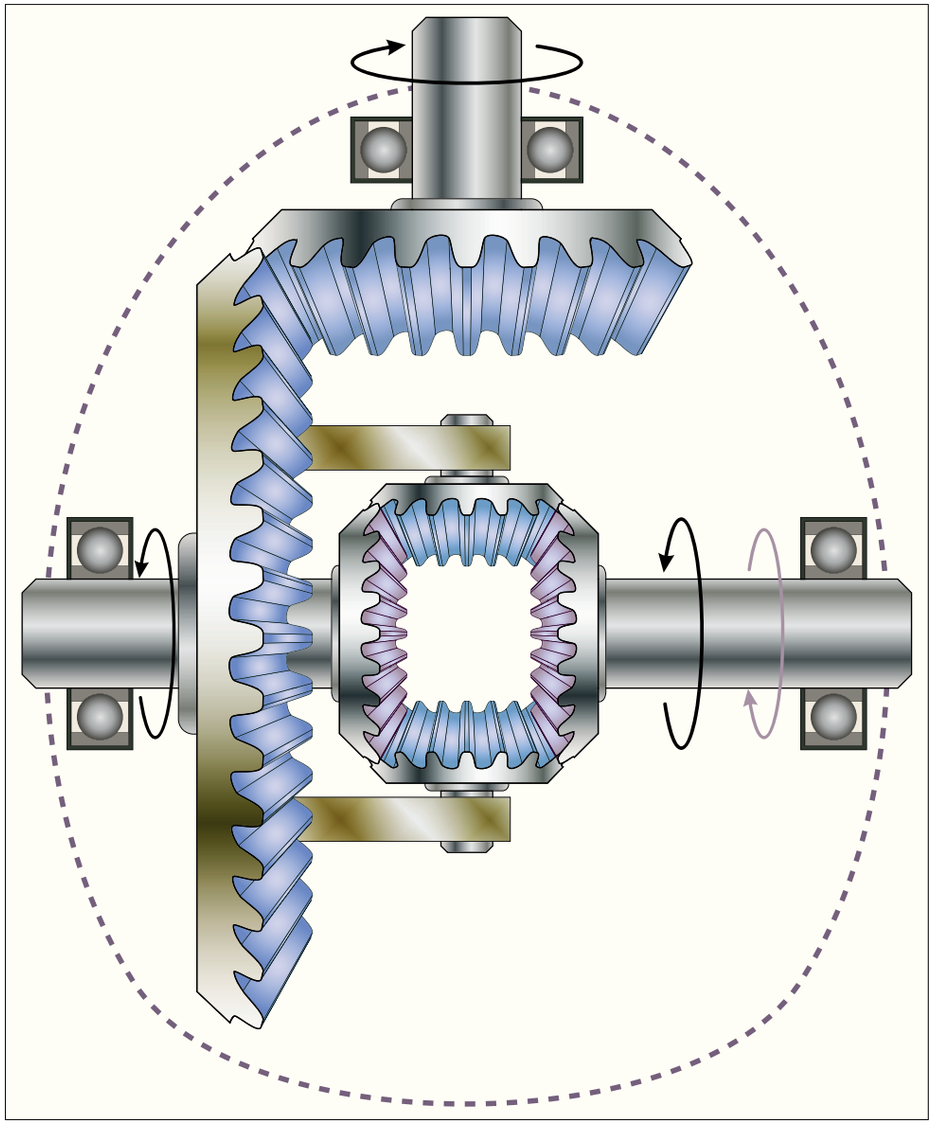

BAE_Practical.indd 232 01/11/2022 12:25:32 PM



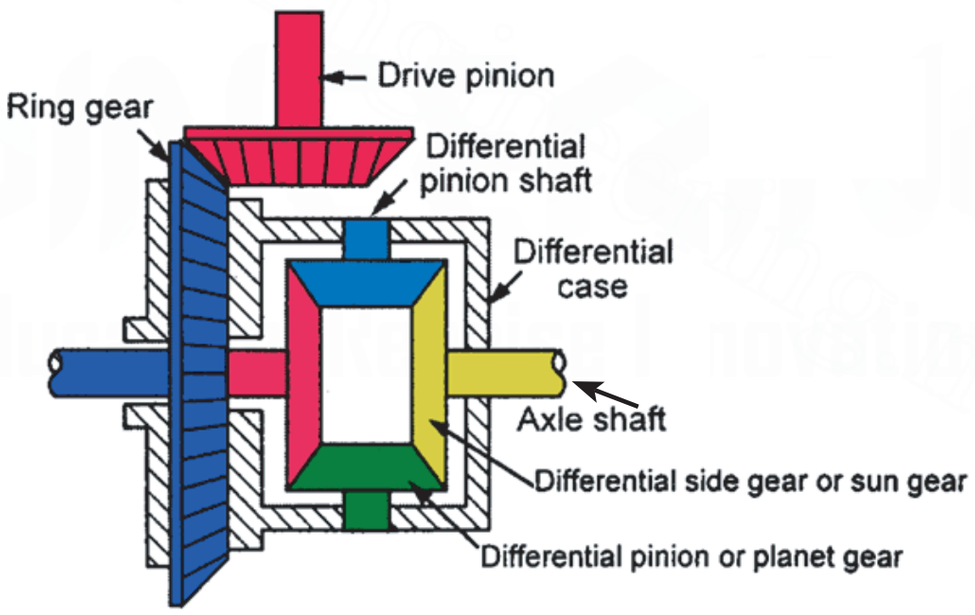

BAE_Practical.indd 233 01/11/2022 12:25:33 PM

Dismantling:

- Place the differential unit on the work bench.
- Remove the crown wheel.
- Remove the differential cage.
- Remove the sun gear, planet gears.
- Clean all the parts with kerosene.

Assembling:

Assembling is the reverse process of dismantling.

Result:

Thus the given differential was dismantled, inspected and reassembled.

BAE_Practical.indd 234 01/11/2022 12:25:33 PM

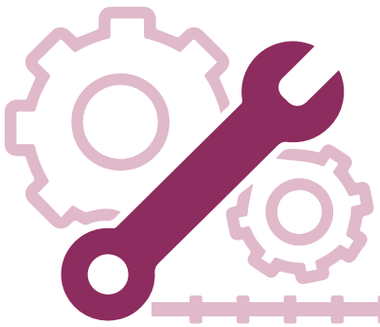

Practical – 4
Steering Gear Box

Aim:

Dismantling, inspecting and assembling the given steering gear box

Equipments:

Given steering gear box

Tools Required

1. Double end spanner
2. Ring spanner
3. Box spanner
4. Plastic hammer
5. Ball Peen hammer
6. Screw driver
7. Plier
8. Drift punch
9. Feeler gauge
10. Torque wrench
11. Metal tray

Materials Required:

1. Cotton waste
2. Kerosene

Reasons for Dismantling:

- Hard steering wheel
- More vibration
- Movement of steering arm is not transmitted to stub axle
- Manufacturer POI is over.

BAE_Practical.indd 235 01/11/2022 12:25:33 PM

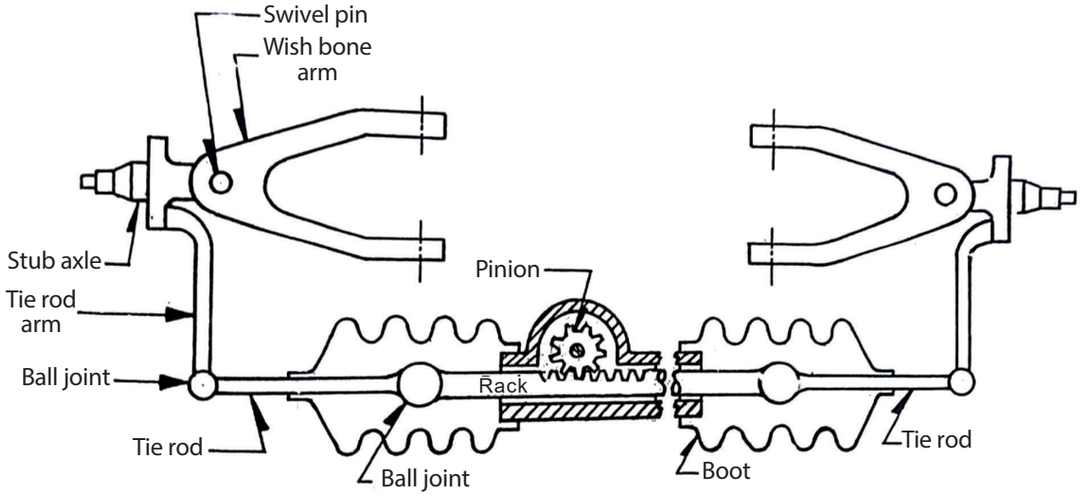

Fig (a) Rack and pinion type steering gear box

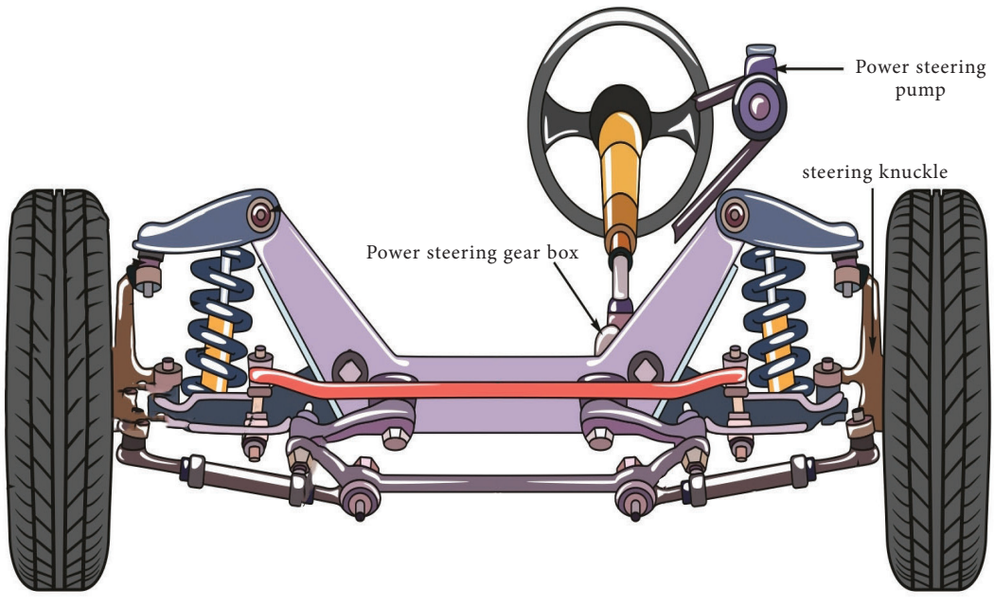

Dismantling

- Remove the horn switch.
- Remove the steering wheel by loosening the wheel lock nut.
- Remove the end play column, thrust bearing and shaft.
- Remove the steering column, thrust bearing, and shrin
- Remove the drop arm drag link
- Remove the steering gear.

BAE_Practical.indd 236 01/11/2022 12:25:33 PM

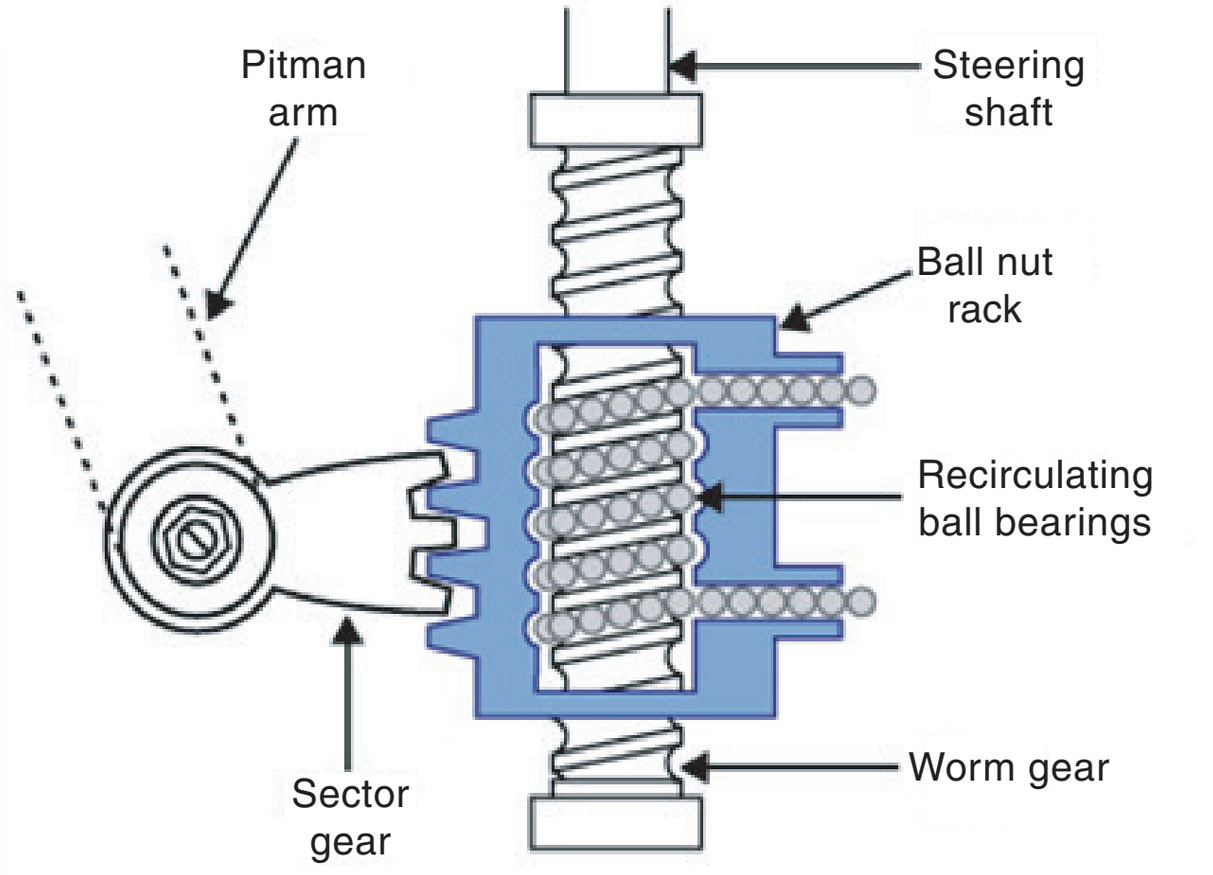

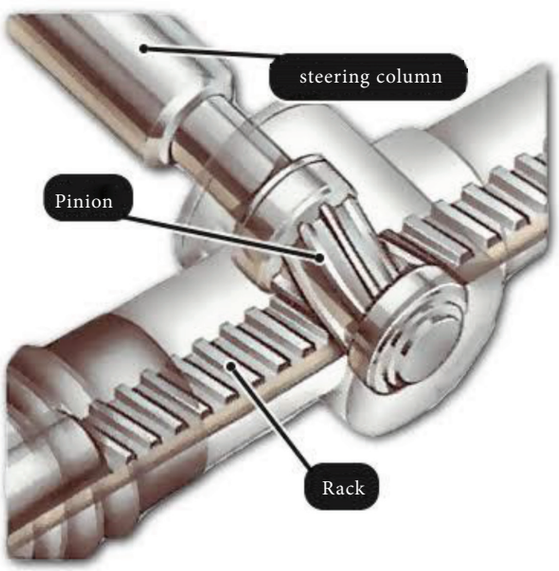

Inspection

- Clean all the parts by kerosene.
- Inspect the, steering wheel steering shaft and worm gear for any damage.
- Inspect the cross shaft and drop arm.

BAE_Practical.indd 237 01/11/2022 12:25:33 PM

- Inspect the bolts, nuts and screw.
- Inspect the thrust bearing shim and housing for any damage.
- Inspect the roller for any damage.
- Replace all the damaged parts by new one.

Assembling

Assembling is the reverse process of the dismantling.

Result

Thus the given steering gear box was dismantled, inspected and reassembled.

BAE_Practical.indd 238 01/11/2022 12:25:33 PM

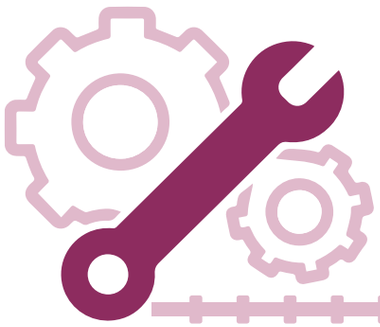

Practical – 5
Master Cylinder

Aim

Dismantling, inspecting and assembling the given master cylinder.

Equuipments

Given master cylinder

Tools required

1. Ring spanner
2. Double end spanner
3. Screw driver
4. Wooden hammer

Material required

1. Cotton waste
2. Diesel
3. Brake oil

Reason for dismantling

1. Braking system not functioning properly.
2. Leakage if brake fluid from master cylinder.
3. Less braking efficiency.

Dismantling

- Remove the oil lines from the master cylinder.
- Disconnect the brake pedal connection from the master cylinder from the chassis.
- Drain out the brake fluid from the master cylinder.
- Remove the circlip by using the circlip plier.
- Remove the piston assembly and spring from the master cylinder by using wooden hammer.

BAE_Practical.indd 239 01/11/2022 12:25:33 PM

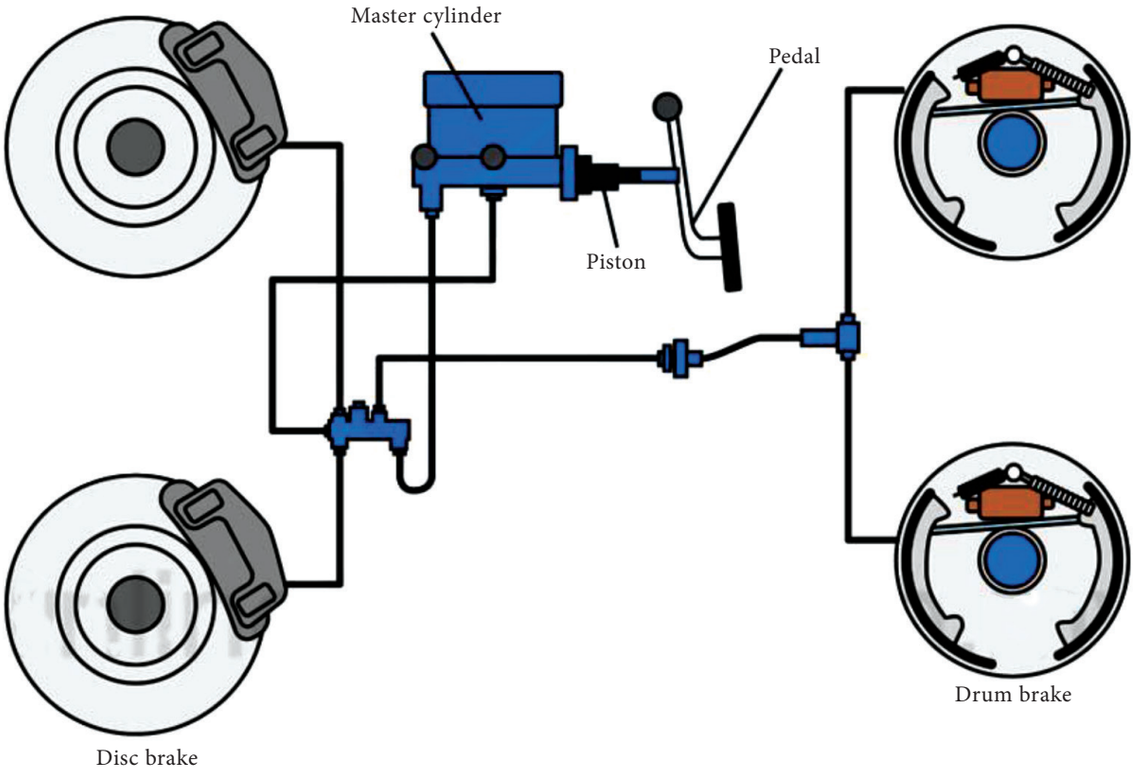

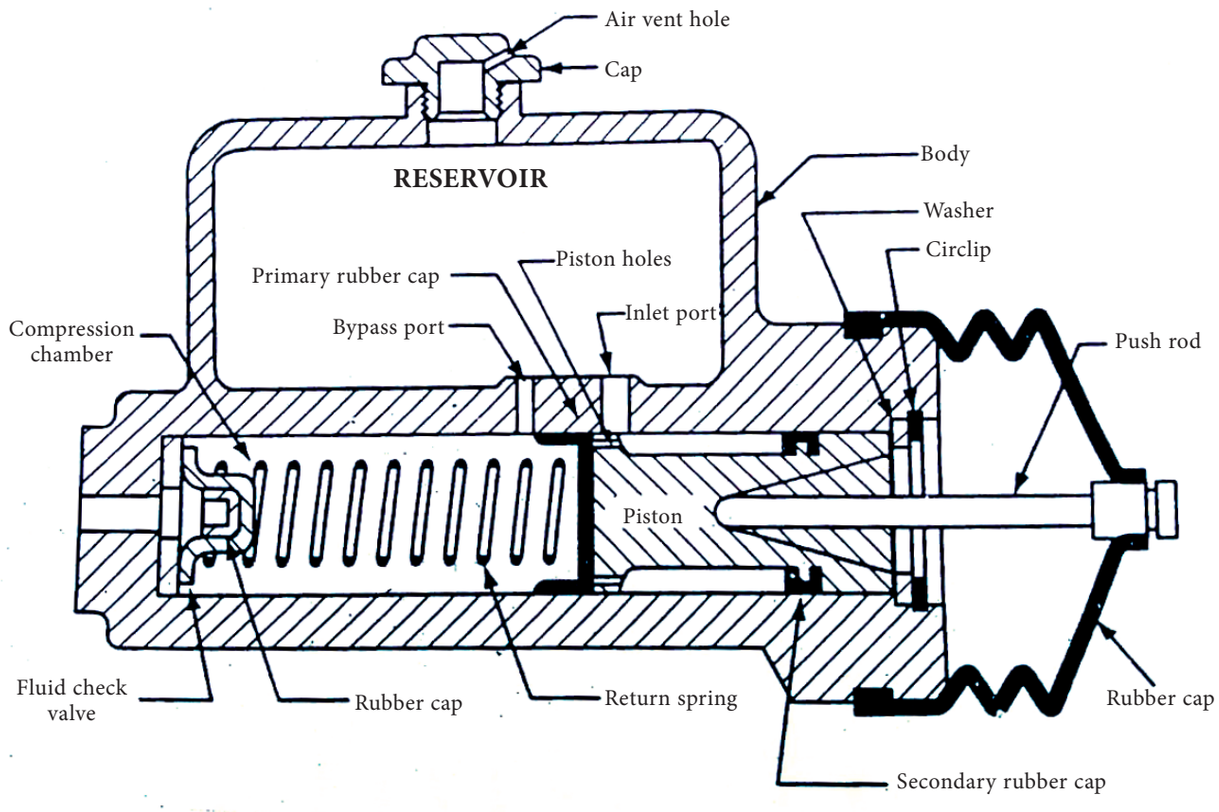

BAE_Practical.indd 240 01/11/2022 12:25:34 PM

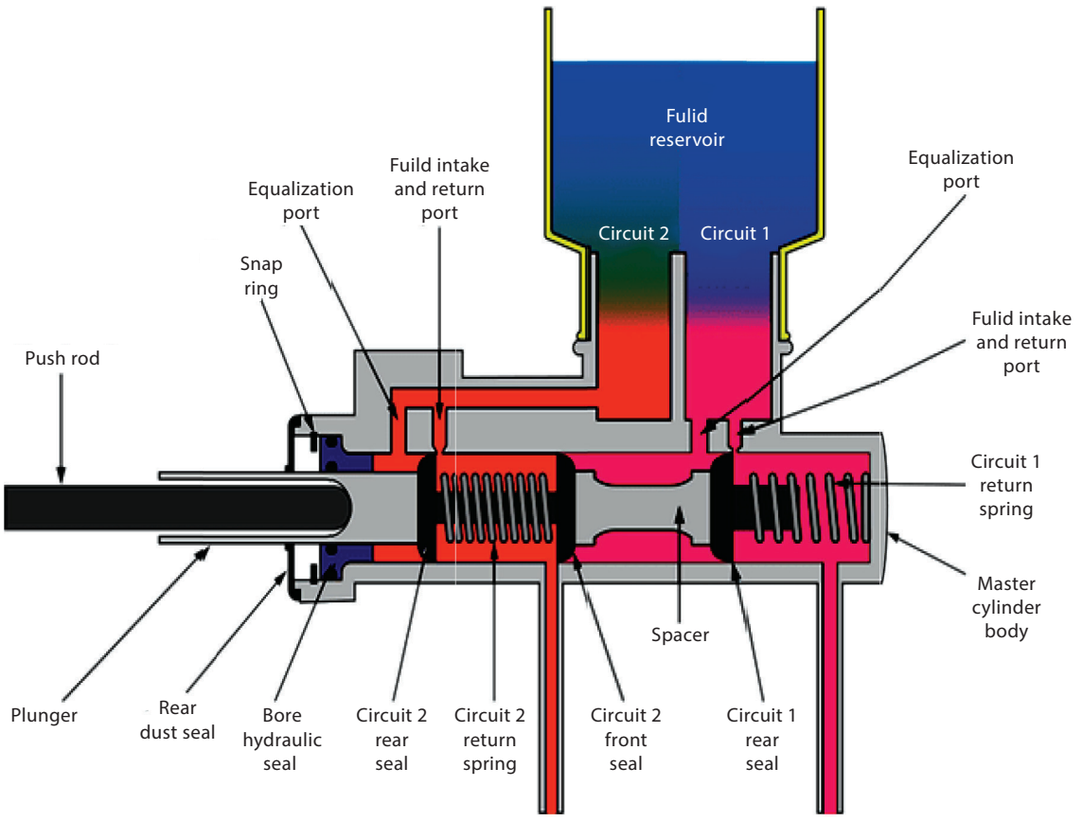



BAE_Practical.indd 241 01/11/2022 12:25:35 PM

Inspection

- Clean all the parts.
- Check the inlet port and by pass port for any blockage.
- Check the spring force.
- Check the piston hole.
- Piston spring, force, value, rubber cups, and brake, pedal linkage.
- Replace the defective parts by a new one.

Assembling

Assembling is the reverse process of dismantling.

Result

Thus the given master cylinder dismantled, inspected and re-assembled.

BAE_Practical.indd 242 01/11/2022 12:25:35 PM

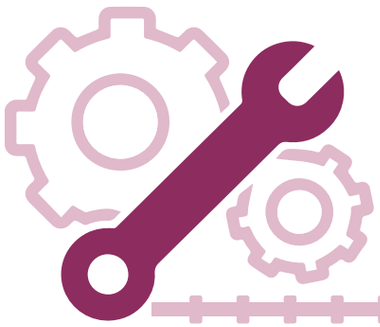

Practical – 6
Wheel Cylinder

Aim

Dismantling, inspecting and assembling the given wheel cylinder.

Tools Required

1. Long nose plier
2. Double end spanner
3. Ring spanner
4. Screw driver
5. Brake shoe tongues
6. Wooden hammer

Material required

1. Cotton waste
2. Kerosene
3. Brush

Reason for dismantling

1. Brake is not applied when brake pedal is pressed
2. Brake is not released even return spring is in good condition
3. Leakage of brake fluid through dust cover
4. Less brake efficiency
5. Wear and tear of rubber cup
6. Difficulties in brake pedal operating
7. Manufacture POI is over

BAE_Practical.indd 243 01/11/2022 12:25:35 PM

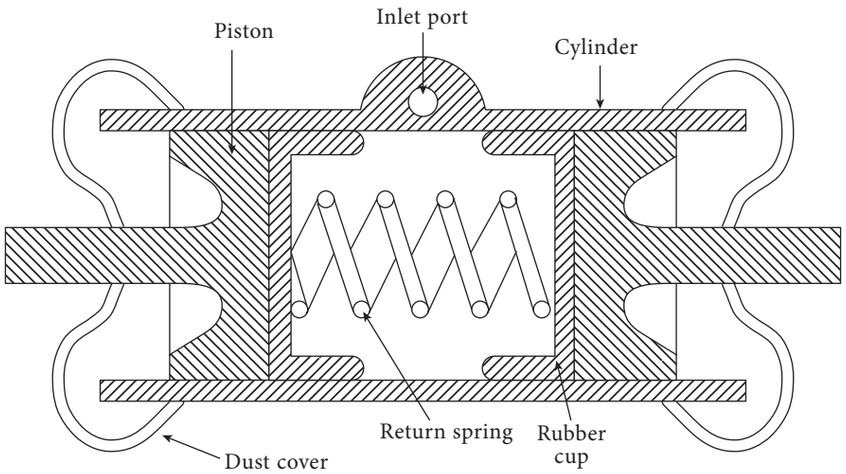

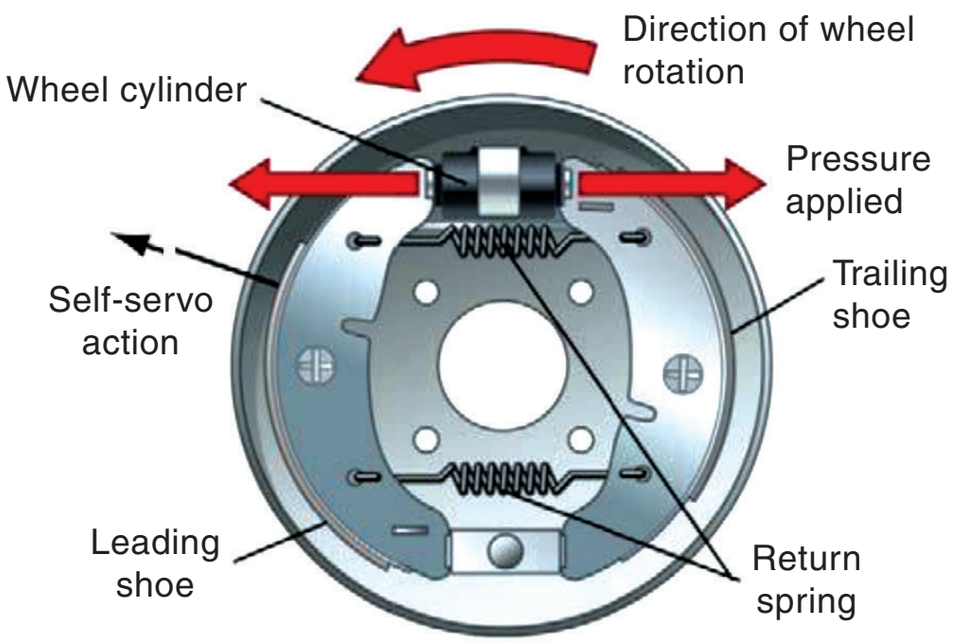

Dismantling

- Disconnect the brake fluid pipe line connection
- Remove the wheel
- Remove the brake drum
- Remove the brake shoe return spring & brake shoe
- Remove the brake shoe tappet
- Remove the mounting bolts of the wheel cylinder
- Remove the wheel cylinder from the brake plate
- Place the wheel cylinder on the work bench
- Remove the dust cover
- Dismantled the wheel cylinder
- Remove the piston, rubber cup and spring

BAE_Practical.indd 244 01/11/2022 12:25:35 PM



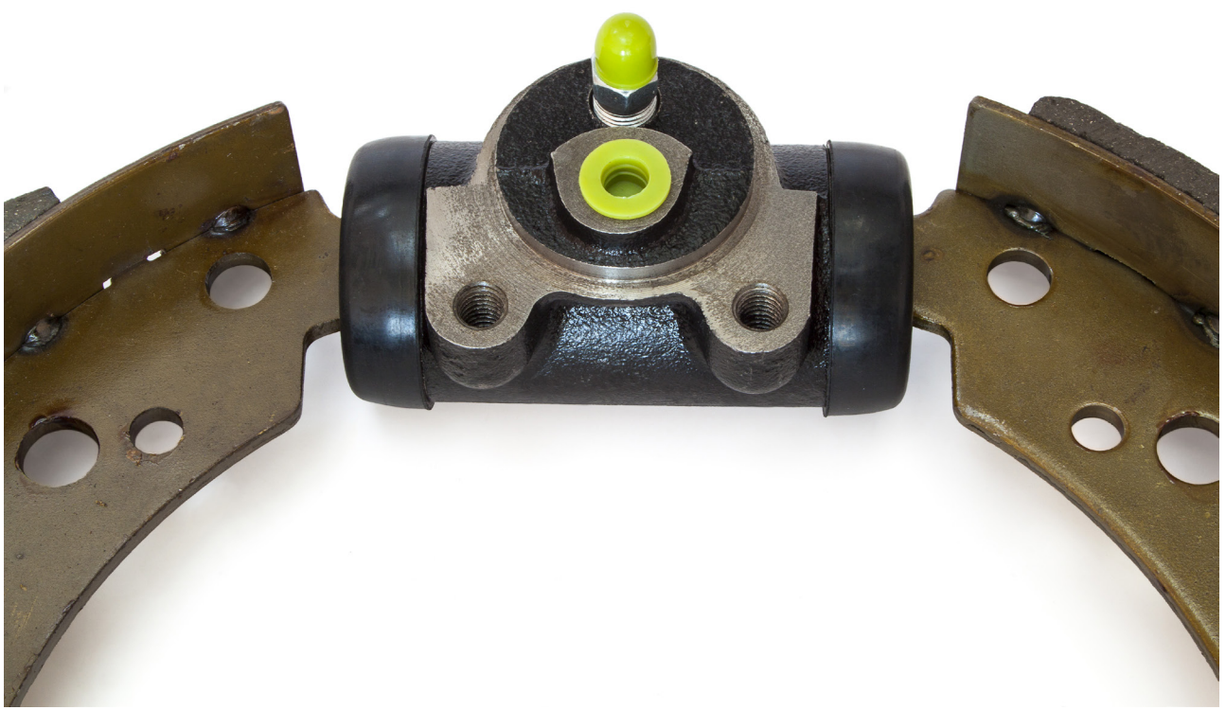

BAE_Practical.indd 245 01/11/2022 12:25:37 PM

Inspection

1. Clean all the parts.
2. Check the wear and tear or any damage in the piston.
3. Check the wheel cylinder body and the condition of inlet port and the bleeder port.
4. Check the condition of the spring.
5. Check the primary and secondary rubber cup.

Assembling

1. Assembling is the reverse process of dismantling.
2. Check the brake condition after assembling.

Result

Thus the given wheel cylinder was dismantled, inspected and re-assembled.

BAE_Practical.indd 246 01/11/2022 12:25:37 PM

Practical – 7
SHOCK ABSORBER

Aim
Dismantling, inspecting and assembling the given shock absorber.

Equipment required
Given shock absorber



Tools required
1. Double end spanner
2. Screw driver
3. Drift punch
4. Wooden hammer

Material required
1. Cotton waste
2. Grease
3. Oil tray

Reasoning for dismantling
- More noise suspension system
- Vehicle pulling to one side
- Improper functioning of shock absorber
- Manufacturing POI is over

Dismantling
1. List the front axle of the vehicle by using jack
2. Remove the lower eye and upper eye mounting bolts of the shock absorber
3. Remove the shock absorber from the vehicle

BAE_Practical.indd 247 01/11/2022 12:25:37 PM

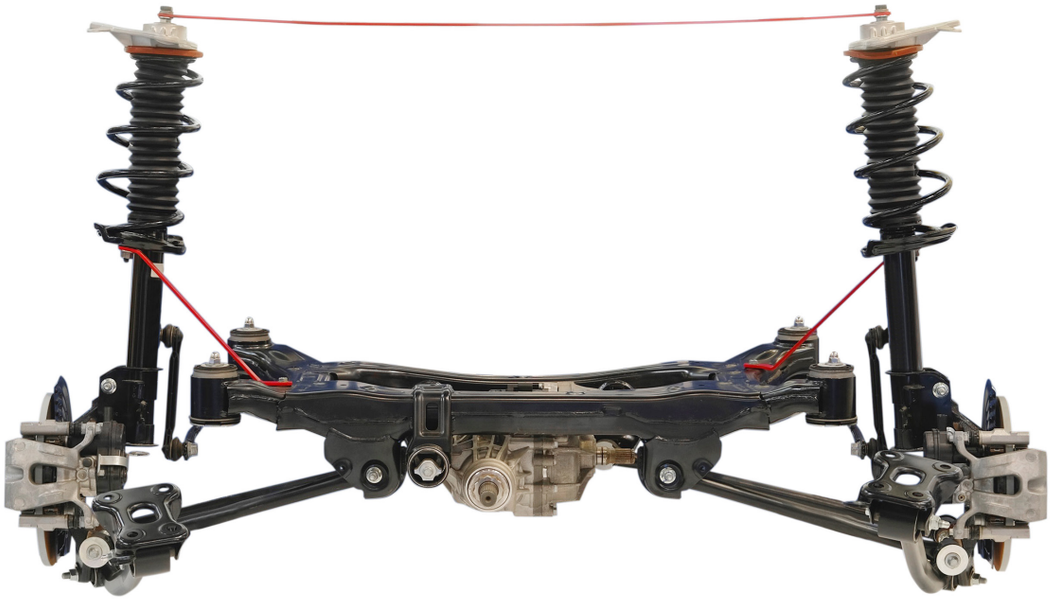

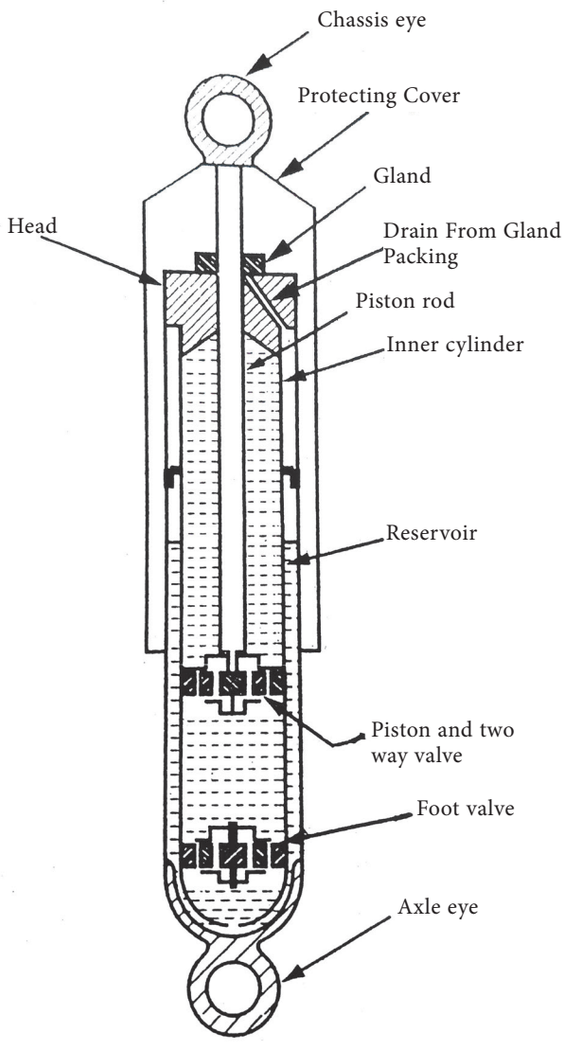

Fig 7.5.2.2 Telescopic type Shock absorber

BAE_Practical.indd 248 01/11/2022 12:25:38 PM

4. Clean the shock absorber by kerosene or water.
5. Loosen the outer tube nut and remove the foot value in the inner tube.
6. Remove the dust cover.
7. Remove the piston and valve assembly.

Inspection

- Inspect the upper eye and lower eye for any damage.
- Inspect the inner tube, outer tube, foot valve, cylinder, piston assembly and etc.
- Replace the defective parts by new one.

Assembling

Assembling is the reverse process of dismantling.

Result

Thus the given shock absorber was dismantled, inspected and assembled.

BAE_Practical.indd 249 01/11/2022 12:25:38 PM

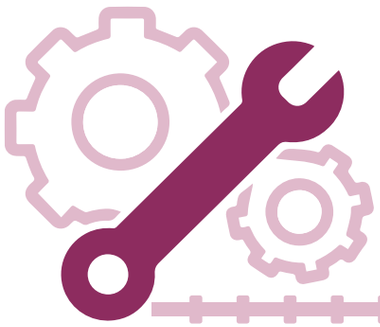

Practical – 8
SELF STARTER MOTOR

Aim

Dismantling, inspecting and assembling of self starter motor.

Equipment required

Given starter motor.

Tools required

1. Double end spanner
2. Ring spanner
3. Wooden hammer
4. Screw driver
5. Armature growler
6. Insulation tester

Material required

- Fine cloth
- Kerosene
- Fine emery sheet
- Insulation tape
- Metal tray
- Work bench

Reasoning for dismantling

- Armature not rotating
- Armature rotate is slowly
- Armature rotates continuously
- More noise while running
- Manufacture POI is over

BAE_Practical.indd 250 01/11/2022 12:25:38 PM



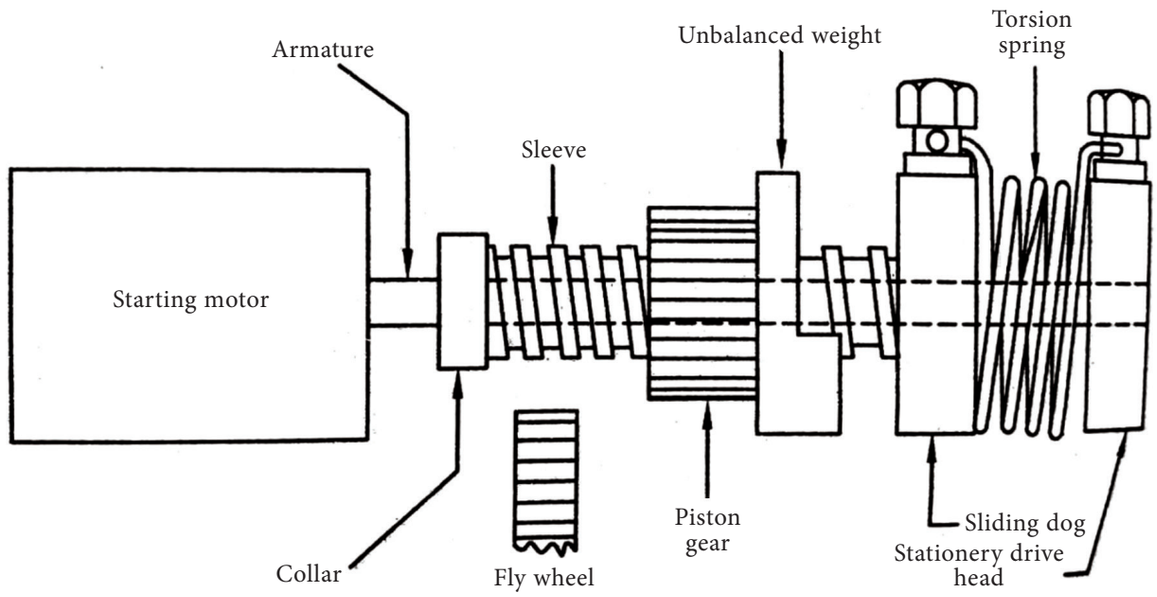

BAE_Practical.indd 251 01/11/2022 12:25:40 PM



Dismantling

- Disconnect all the electrical connections.
- Disconnect the mounting bolts and nuts of the starting motor.
- Remove the starting motor from the vehicle and clean the outer portion.
- Place the starting motor on workbench.
- Remove the end cover.
- Remove the armature shaft.
- Dismantled the drive mechanism [Pinion, Bearing, Spring and etc.]

Inspection

- Clean all the parts.
- Inspect the armature, field winding, collar, sleeve unbalanced weight, pinion, drive mechanism, spring, bearing and etc… for any damage.

Insulation test

- An A.C. circuit containing two poles and one light switch is used for this test.
- One pole is connected with the armature coil and other is with the segment.
- 'ON' the light switch, if the light, glows change the brush plates.
- Connect one pole to the field terminals and other end with the vice, if the light, glows change the field.

BAE_Practical.indd 252 01/11/2022 12:25:41 PM

Armature glower tester

It used to check any short circuit in the armature.

If a growling sound comes, then there is a short circuit in the armature, otherwise if is ok.

Assembling

Assembling is the reverse process of dismantling.

Result

Thus the given self starter motor dismantled, inspected and assembled.

BAE_Practical.indd 253 01/11/2022 12:25:41 PM

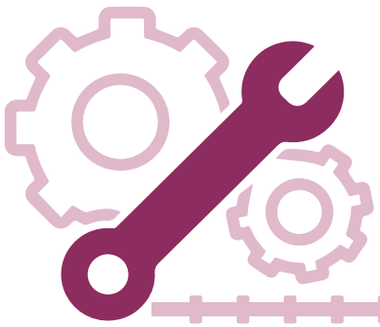

Practical – 9
DYNAMO

Aim
Dismantling, inspecting and assembling the & given dynamo.

Equipments required
Given Dynamo

Tools required
1. Ring spanner
2. Double end spanner
3. Screw driver
4. Drift punch
5. Wooden hammer
6. Armature growler
7. Insulation tester
8. Puller
9. Copper hammer

Material required
1. Cotton waste
2. Kerosene

Reasoning for dismantling
- No current supply through terminals
- More noise when the generator is running
- Low output current in dynamo
- Damage armature bearing
- Manufacture of POI is over

BAE_Practical.indd 254 01/11/2022 12:25:41 PM

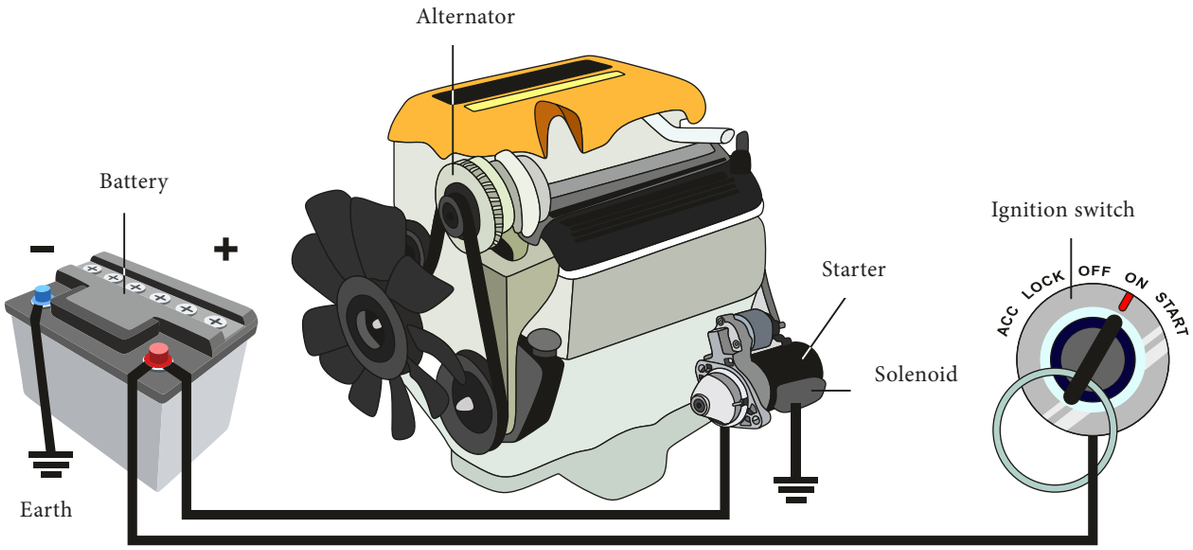

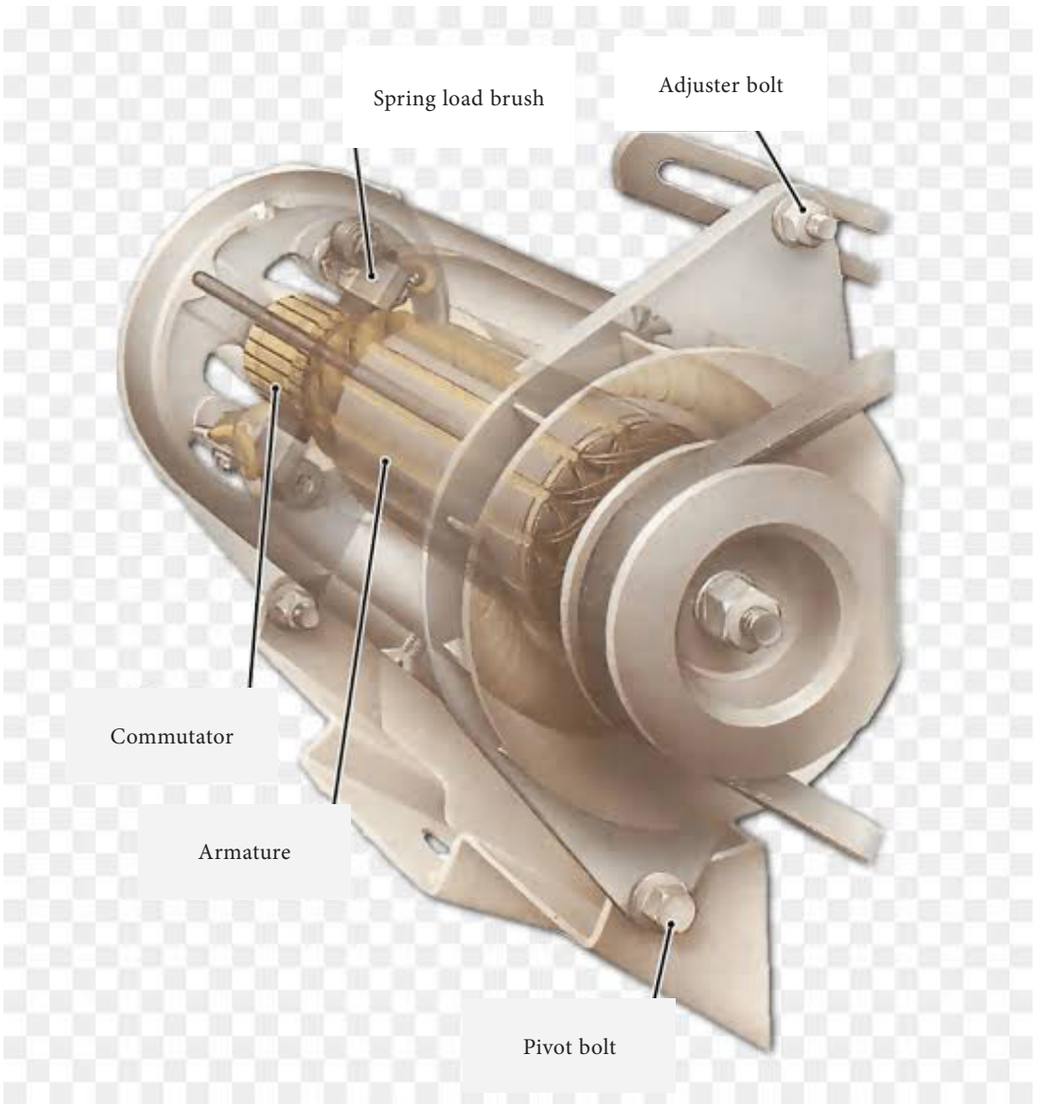

BAE_Practical.indd 255 01/11/2022 12:25:41 PM

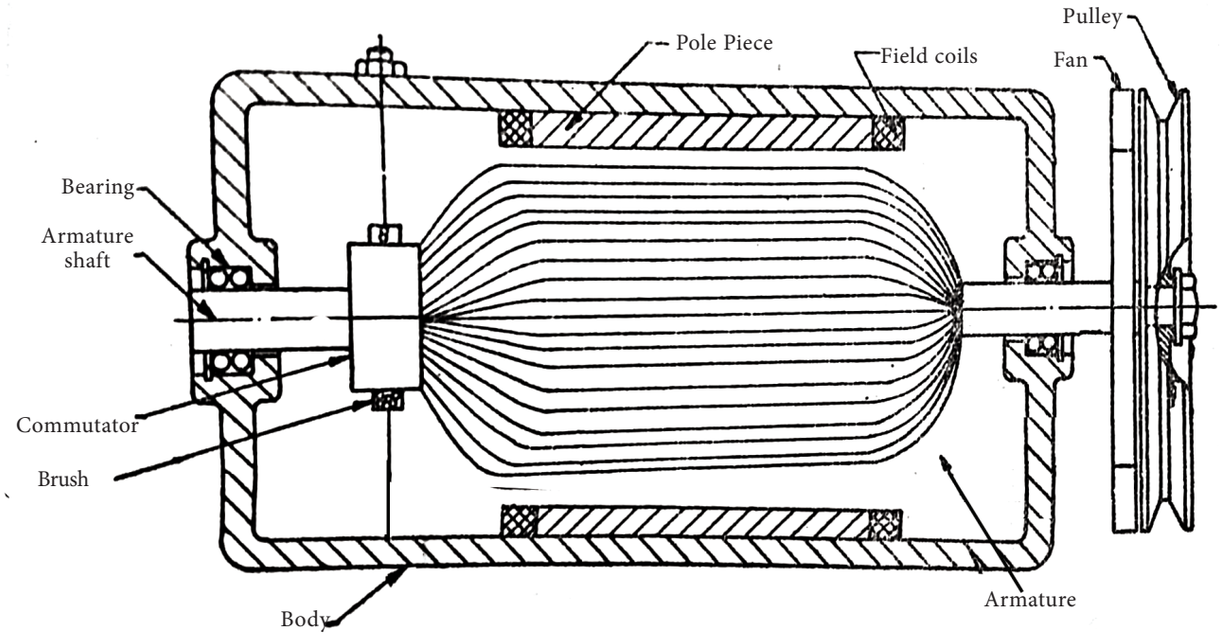

Dynamo (or) D.C. Generator

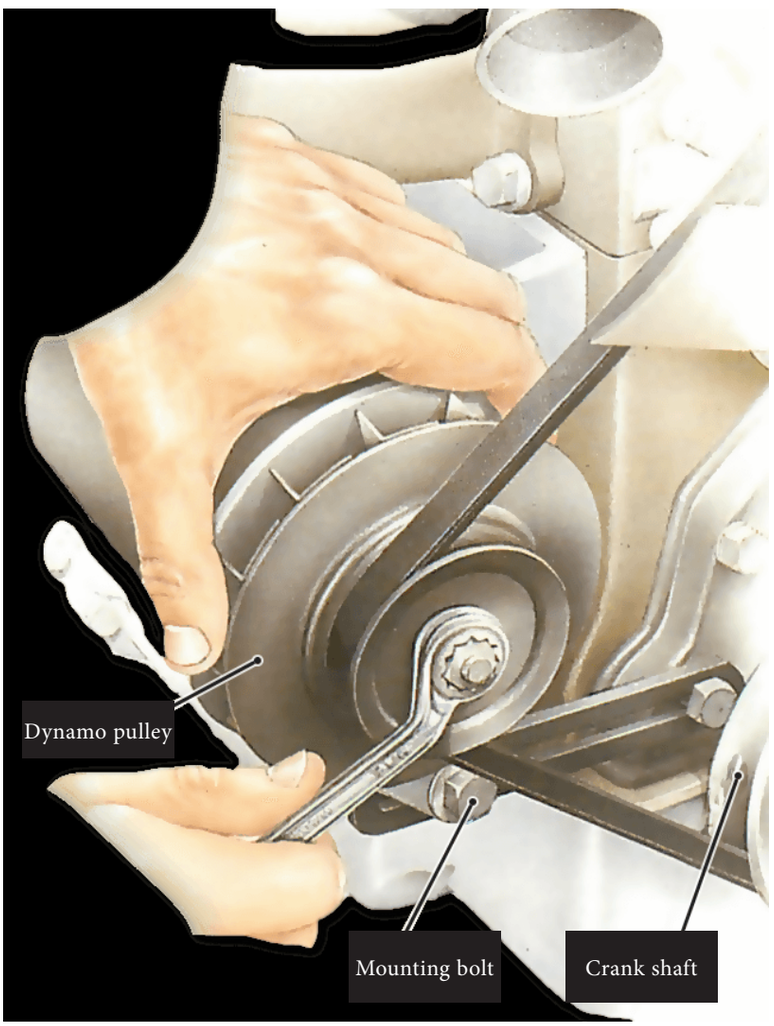

BAE_Practical.indd 256 01/11/2022 12:25:41 PM

Dismantling

- Disconnect the electrical connections.
- Remove the belt from the dynamo pulley.
- Remove the mounting bolts and nuts.
- Place the generator on the work bench.
- Dismantling the following parts from the generator.

1. 'V' Pulley
2. End cover
3. Armature assembly
4. Commutator

Testing

Insulation test

Insulation test

- An A.C circuit containing two poles and one light switch is used for this test.
- One pole is connected with the armature coil and other is with the segment.
- 'ON' the light switch, if the light, glows change the brush plates.
- Connect one pole to the field terminals and other end with the vice, if the light, glows change the field.

Inspections

- Inspect the following parts.
- Armature winding, field coils, commutator, carbon brush, bearing, spring force, fan, 'V' pulley and etc…

Assembling

Assembling is the reverse process of dismantling.

Result

Thus the given dynamo was dismantled, inspected and assembled.

BAE_Practical.indd 257 01/11/2022 12:25:41 PM

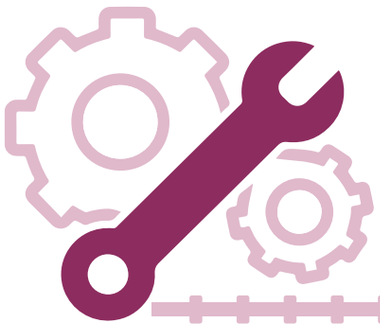

Practical – 10
BATTERY

Aim

To check the condition of the battery.

Equipments required

Given battery

Tools required

1. Double end spanner
2. Screw driver
3. Hydrometer
4. Voltage tester

Material Required

- Cotton waste
- Grease
- Distilled Water

Procedure

Specific gravity test

- Hydrometer is used for this test.
- Remove the vent plug and place the hydrometer hose inside the cell.
- Press and release the rubber bulb.
- Small amount of electrolyte is drawn into the glass tube.
- Now the float is float in the electrolyte.
- Note the reading on the graduate scale.

BAE_Practical.indd 258 01/11/2022 12:25:41 PM

S. No.	Cell No.	Specific Gravity
1.		
2.		
3.		
4.		
5.		
6.		

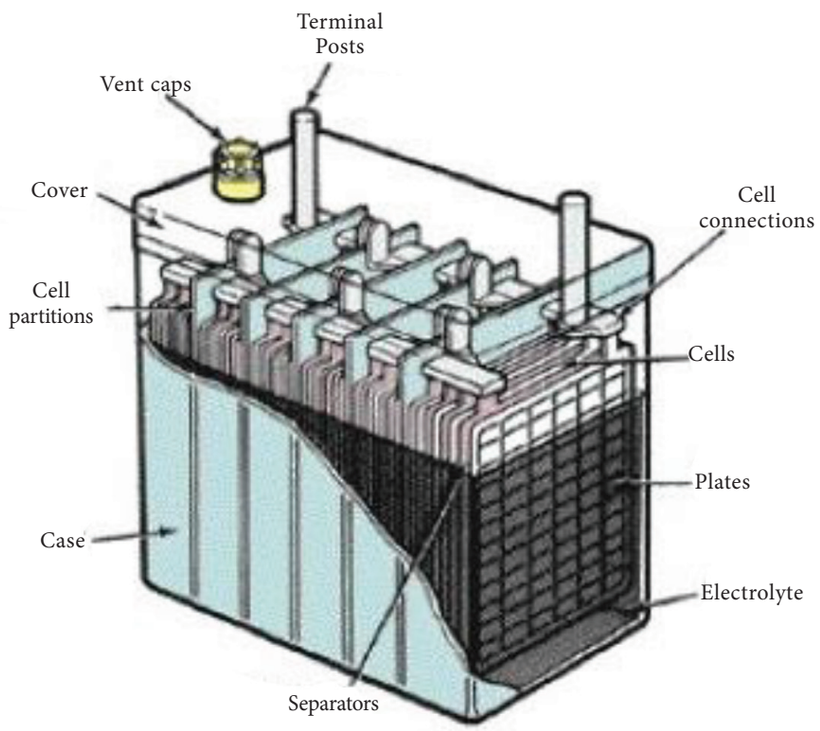

BAE_Practical.indd 259 01/11/2022 12:25:41 PM



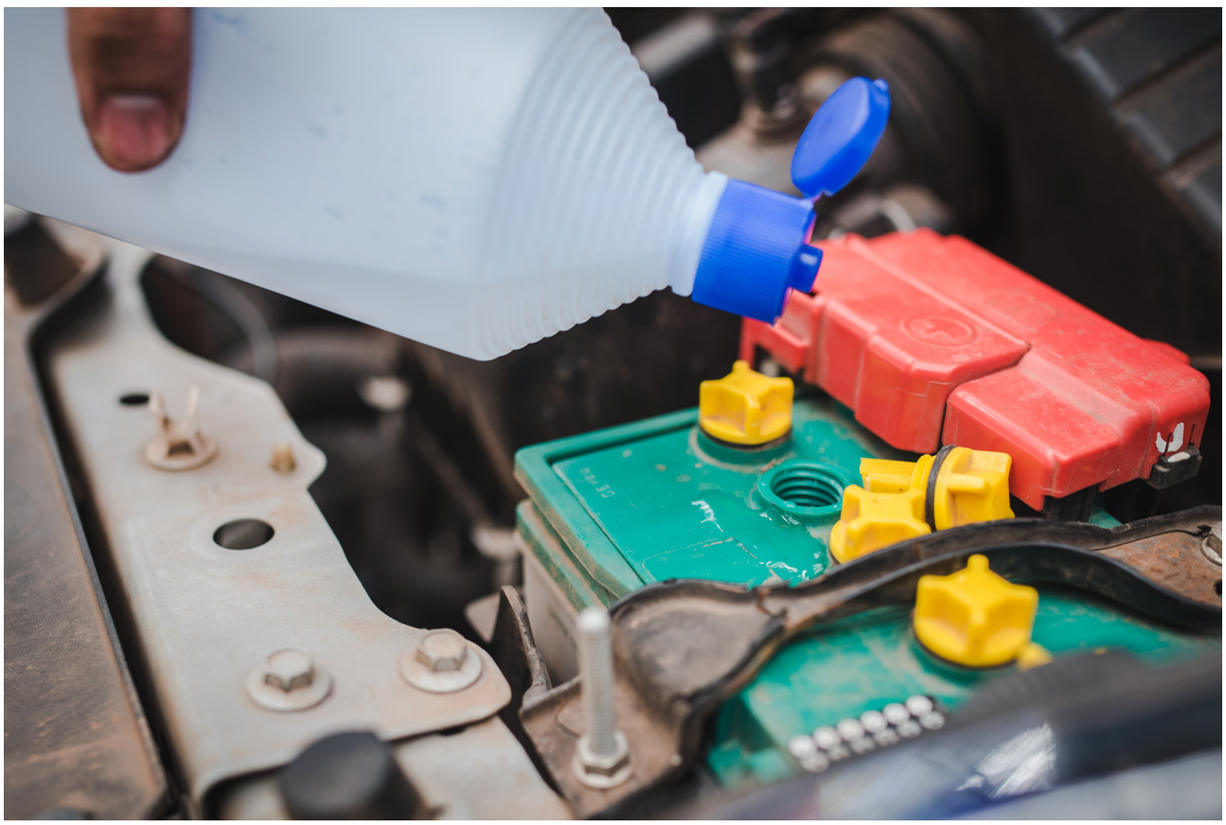

BAE_Practical.indd 260 01/11/2022 12:25:44 PM

- Tabulate the reading.
- Repeat the same procedure for other cells.

Cell voltage tester

Cell voltage tester is used to check the volt for cell.

Remove the vent plug and check the voltage if cell by using voltage tester.

Tabulate the following.

Repeat the same procedure for other cells.

Maximum cell voltage per cell is 2.1.V it depends on specific gravity of the electrolyte.

S. No.	Cell No.	Volt
1.		
2.		
3.		
4.		
5.		
6.		

Result

The charge condition of battery is checked.

BAE_Practical.indd 261 01/11/2022 12:25:44 PM

Case Study

Name	Er. T. Amalan Paul Samuel M.E.
Designation	Configuration Manager
Organisation	Vestas Wind Systems A/S Denmark
School & Batch	T.V.S. Higher Secondary School, 1997–1999 batch

I thank my Creator for bringing me through with His grace and blessings. Also, I am grateful to my **T.V.S. Higher Secondary School** and my Auto mechanic teacher **Er.R.S.Muralidharan** who played a major role in my academics for what I am today. Though I took this course without an option, still he was instrumental in kindling my interest & passion towards mechanical engineering.

I sincerely thank my parents Mr. M.Thanasekaran, Retd. Sub-Divisional Engineer, BSNL and Mrs. Padma Thanasekaran, Retd. PG Asst., for their support and encouragement throughout my life.

Though vocational group is often overlooked by many, this course helped me to get my basics on engineering right. Being a vocational course, the curriculum is set in such a way that it helps to build the confidence of a young student towards equipping oneself as entrepreneur. The confidence that I gained from the subject still speaks for itself when I access any real time situations at my work.

Auto Mechanic course had set a solid foundation for my career as an engineer. The motivation given by Er.R.S.Muralidharan helped me to aim for engineering that progressed towards the completion of Master's in Engineering with specialization in CAD / CAM. He taught me the importance of looking for details, completion with perfection, team work, maintaining the equipment & tools that we use practical & systematic way of servicing components etc. I am always thankful to my school which not only helped me to grow in my academics but also instilled in me the importance of discipline and social responsibility.

Currently, I am working with **Vestas Wind Systems A/S** a Danish manufacturer, seller, installer, and servicer of wind turbines. It is the largest wind turbine company in the world.

BAE_Case Study.indd 262 01/11/2022 12:27:13 PM

I am proud to work in the **green energy sector** for more than a decade by giving back to the society positively. I have an **international patent - WO/2012/089214**. The invention relates to a method and assembly for aligning a wind sensor relative to a rotatable nacelle of a wind turbine.

From all these years I have understood that hard work brings positive returns. Enjoy learning and always have a superior goal to achieve and work towards it everyday by accomplishing smaller ones.

All the very best and wishes.

T. Amalan Paul Samuel

BAE_Case Study.indd 263 01/11/2022 12:27:13 PM

Case Study

Name	T. Dinesh Moorthi
Father Name	K. Thirumalaisamy
Organisation	Schneider Electric GmbH, Wiehl, Germany
School	Palani Gounder Higher Secondary School, Nachimuthu Polytechnic College Campus, Pollachi, Coimbatore District - 6420012

Dear friends,

I, T.DINESH MOORTHI, would like to share my opinion and how I strived to reach the highest position in my life as I choose a Auto Mechanic group in Vocational Stream at higher Secondary level.

My father worked as an Instructor in Auto Mechanic Laboratory at Nachimuthu Polytechnic College, Pollachi. After the completion of my SSLC, out of my personal interest and my father's advice I selected the vocational group and joined at **Palanigounder Higher Secondary School, Pollachi**, a school of excellence for vocational education which received the NCERT Award twice for promoting good vocational education.

These two years of study was a turning point in my career. During my school days, I had skill training in reputed car companies, where I learnt modern technologies and acquired innovative skills along with academic studies which changed my entire career. It paved way for my higher education and bright future.

I was the top rank holder in the Higher Secondary XII Standard Public Examination. I applied for B.E., admission in Anna University through single window counseling system. I got the fifth place in Anna University ranking for admission. I selected Production Engineering Course at PSG College of Engineering, Coimbatore.

The strong knowledge which I acquired in the Higher Secondary Course and the technical skill experience which I got in the industrial training helped me a lot in the engineering course and so I was awarded with the best outgoing student at PSG College of Engineering.

BAE_Case Study.indd 264 01/11/2022 12:27:13 PM

I was selected in the campus interview to work at Schneider Electric Company. Then I was placed in the R & D Centre, Bengaluru. Thereafter, I got promotion went to Demark and served for 1½ years. For the past 2½ years I have been working at Schneider Electric Company in Germany.

In the present Scenario, what I suggest that Vocational education is an essential one for all and the need of hour. It is the base of our life and is necessary for the growth of our economy and nation.

My suitable selection of vocational course is the basic reason for my growth and my life is an example to others.

Thanking you, all the best good luck.

All the very best and wishes.

T. Dinesh Moorthi

BAE_Case Study.indd 265 01/11/2022 12:27:13 PM

Case Study

Name	P. Thirumurugavel
Father	R. Prasad
Mother	P. Valli
D.O.B	04.11.1996
School	General Cariyappa Higher Secondary School, Dhasaradhapuram, Saligramam, Chennai – 93.
Residence	104/25 Annai Abirami Nagar, 3rd St., Thiruverkadu, Chennai.
Garage Address	Sri Sakthi Auto Garage 13, C.D.N Nagar 14th Street Nerkundram, Chennai.

I am proud to saying a few words about my school. **General Cariyappa Higher Secondary School** Which is a pioneer I teaching Vocational education in higher secondary level changing the life style of the students?

The name automobile engineering itself threatened me that the syllabus would be tough and hard when I joined this course but I completed it with first rank I the state at 2014. My teams project potable Battery charger won NCERT award and our team went to Bopal to receive the same with pleasure and pride and all the credit goes to my Head masters and Teachers.

Through I could not step in to the college due to family crisis and I could do my apprentice ship in major service centers since 2am the student of this school.

My vocational education in automobile engineering has given me confidence to bear my own workshop and running it successfully.

Iam an employer of right persons providing them monthly salary besides earning Rs 1, 00,000 personally.

BAE_Case Study.indd 266 01/11/2022 12:27:13 PM

I give complete service and repairs to various light and heavy vehicles giving the good name from many customers and all these success in my life are the byproducts of my vocational education which I remember with happy tears.

Thanking you

All the very best and wishes.

P. Thirumurugavel

BAE_Case Study.indd 267 01/11/2022 12:27:13 PM

Case Study

Name	Ashok S.A, S/O. S.A.Raja
Qualification	M.E., Electronic application engineer
Job	Assistant Professor, Panimalar Engineering College, Chennai
School	N.S.V.V. Boys Higher Secondary School, Pattiveeranpatti, Dindugal District

Hello Friends

I, R.Ashok have completed my higher secondary Automechanic course from **N.S,V.V. Boys higher secondary school Pattiveeranpatti** during the year 2005 and 2007.

I like to share the key turning points happened in my life. After completing my 10th standard, my father advised me to join in Auto mechanic group. Even though my interest towards teaching field, I joined in this course. After that, my teacher Mr.S.S. Suthan encouraged me and guided me that teaching is possible in this field also. Under his guidance, I studied well in 12th standard and passed out with state first rank. I take this opportunity to thank my teacher Mr.S.S. Suthan for his help and encouragement. Moreover, I could able to select the subject Electronics and communication in my Engineering degree.

At this moment, I express my sincere thanks to all the teachers of N.S.V.V Boys higher secondary school and I am grateful to the school management who helped poor student like me to change our life.

All the very best and wishes.

Ashok S.A

BAE_Case Study.indd 268 01/11/2022 12:27:13 PM

References

1. Kirpal Singh, "Automobile Engineering Vol 1 & 2", Standard Publishers, Seventh Edition, 1997, New Delhi.
2. Rajput, R.K., "A Textbook of Automobile Engineering", Lakshmi Publication, Second Edition, New Delhi, 2015
3. Garrett.T.K, Newton.K, Steeds. W., "The Motor Vehicle", 13th Edition, Butterworth Publishers,2001.
4. Heinz Heisler, "Engine and Vehicle Technology", Butterworth Heinmann Publishers, Second Edition, 2002.
5. Jack Erjavec, Rob Thompson, "Automotive Technology: A Systems Approach", Cengage Learning, 2014
6. Jack Erjavec, "Manual Transmissions and Transaxles", Delmar Thomson Learning, 2001
7. William H. Crouse, Donald L. Anglin, "Automotive Mechanics", McGraw-Hill Higher Education, 1993
8. Garrett.T.K, Newton.K, Steeds. W., "The Motor Vehicle", 13th Edition, Butterworth Publishers,2001.
9. Heinz Heisler, Advanced Vehicle Technology, Butterworth Heinmann Publishers, Second Edition, 2002.
10. Jack Erjavec, "Manual Transmissions and Transaxles", Delmar Thomson Learning, 2001
11. Garrett.T.K, Newton.K, Steeds. W., "The Motor Vehicle", 13th Edition, Butterworth Publishers,2001.
12. Heinz Heisler, Advanced Vehicle Technology, Butterworth Heinmann Publishers, Second Edition, 2002.
13. Jain, K.K., and Asthana. R.B, "Automobile Engineering" Tata McGraw Hill Publishers, New Delhi, 2002.
14. Jack Erjavec, "Manual Transmissions and Transaxles", Delmar Thomson Learning, 2001
15. Heinz Heisler, Advanced Vehicle Technology, Butterworth Heinmann Publishers, Second Edition, 2002.
16. Rajput, R.K., "A Textbook of Automobile Engineering", Lakshmi Publication, Second Edition, New Delhi, 2015
17. Joseph Heitner, "Automotive Mechanics", Second Edition, East-West Press, 1999.
18. William H. Crouse, Donald L. Anglin, "Automotive Mechanics", McGraw-Hill Higher Education, 1993
19. Garrett.T.K, Newton.K, Steeds. W., "The Motor Vehicle", 13th Edition, Butterworth Publishers,2001.
20. Rajput, R.K., "A Textbook of Automobile Engineering", Lakshmi Publication, Second Edition, New Delhi, 2015

BAE_References.indd 269 01/11/2022 12:26:14 PM

21. Gupta. S.K., "A Textbook of Automobile Engineering", S. Chand & co, New Delhi, 2016

22. Tim Gilles, "Automotive Chassis: Brakes, Suspension, and Steering", Cengage Learning, 2005

23. Jack Erjavec, "Automotive Brakes", Cengage Learning, 2003

24. Heinz Heisler, Advanced Vehicle Technology, Butterworth Heinmann Publishers, Second Edition, 2002.

25. Reimpell.J., "The Automotive Chassis: Engineering Principles", Butterworth-Heinemann, Second Edition, 2001

26. Don Knowles, "Automotive Suspension and Steering Systems", Cengage Learning, 2002

27. Tim Gilles, "Automotive Chassis: Brakes, Suspension, and Steering", Cengage Learning, 2005

28. Rajput, R.K., "A Textbook of Automobile Engineering", Lakshmi Publication, Second Edition, New Delhi, 2015

29. Robert Bosch GmbH, "Automotive Handbook" 9th Edition, Wiley

30. Don Knowles, "Automotive Suspension and Steering Systems", Cengage Learning, 2002

31. Tim Gilles, "Automotive Chassis: Brakes, Suspension, and Steering", Cengage Learning, 2005

32. Rajput, R.K., "A Textbook of Automobile Engineering", Lakshmi Publication, Second Edition, New Delhi, 2015

33. Heinz Heisler, Advanced Vehicle Technology, Butterworth Heinmann Publishers, Second Edition, 2002.

34. Gupta. S.K., "A Textbook of Automobile Engineering", S. Chand & co, New Delhi, 2016

35. Garrett.T.K, Newton.K, Steeds. W., "The Motor Vehicle", 13th Edition, Butterworth Publishers, 2001.

36. Rajput, R.K., "A Textbook of Automobile Engineering", Lakshmi Publication, Second Edition, New Delhi, 2015

37. Srinivasan. S, "Automotive Mechanics", 2nd Edition, Tata McGraw-Hill Education, 2003

38. Tom Denton, "Automobile Electrical and Electronic Systems", Butterworth Heinmann Publishers, 4th Edition, 2012

39. Kohli P L., Automotive Electrical Equipment, Tata McGraw Hill Publishing Company Limited, New Delhi, 2006

40. Robert Bosch GmbH, "Bosch Automotive Electrics and Automotive Electronics", 5th Edition, Springer

41. Robert Bosch GmbH, "Automotive Handbook" 9th Edition, Wiley

BAE_References.indd 270 01/11/2022 12:26:14 PM

Glossary

Torque Tube	முறுக்கு விசைக் குழாய்
Rear axle casing	பின் இருசு மூடி
Sliding joint (or) Slip joint	நெகிழ் இணைப்பு
Braking Torque	தடை விசை
Banjo type casing	தம்புரா வகை இருசு மூடி
Split type casing	பிரிக்கும் வகை இருசு மூடி
Hypoid gear	சுருள் பற்சக்கரம்
Worm gear	திருகு பற்சக்கரம்
Bevel gear	சரிவு பற்சக்கரம்
Coupling	இணைப்பி
Differential assembly	வேகமாற்றித் தொகுப்பு
Axle breather	அச்சுக்கூட்டின் காற்று நீக்கி
Hub	சக்கரக் குடம்
Rim	விளிம்புச் சட்டம்
Tube	காற்றுக்குழல்
Tyre	பட்டை
Tubeless tyre	குழலற்ற பட்டை
Tubed tyre	குழலுடைய பட்டை
Vulcanizing	கசிவு நீக்குதல்
Tread	மிதிப்புப் படலம்
Breakers	முறிவலைப் படலம்
Bead wires	விளிம்பிழைகள்
Ply rating	படல எண்
Cord ply	இழைநார்ப் படலம்
Inflation	காற்றழுத்தம்
Fitness certificate	தகுதிச் சான்றிதழ்
Anchor pin	ஆதார பின்

BAE_Glossary.indd 271 01/11/2022 12:24:33 PM

Brake band	தடை வளையம்
Dust boot	தூசு மூடி
Brake shoe adjuster	தடைக்கட்டை நகர்த்திகள்
Serrated wheel adjuster	பற்சக்கர வகை நகர்த்தி
Wedge type adjuster	ஆப்பு வகை நகர்த்தி
Snail type adjuster	நத்தை வகை நகர்த்தி
Power brake	சத்தூட்ட தடை
Booster	திறன் பெருக்கி
Air exhauster	காற்று வெளியேற்றி
Stabiliser	நிலை நிறுத்தும் கம்பி
Cambering	வளைவூட்டிதல்
Stub Axle	துண்டு அச்சு
Universal Joint	கோணம் மாறும் இணையம்
Suspension system	அதிர்வு நீக்கும் அமைப்பு
Shackle	அசைவுக் கரம்
Bushes	தேய்வுறைகள்
Clips	கவ்விகள்
Central bolt	மையத் திருகாணி
Mainleaf	பிரதான பட்டை / முக்கிய பட்டை
Helper spring	துணைப் பட்டைவில் தொகுப்பு
Forging	அடித்துருவாக்கல்
Silent block bush	சத்தமற்ற தேய்வுறை இணைப்பு
Parallel link type	இணை இணைப்பு வகை
Trailing link (or) Swing arm type	ஊசல் (அல்லது) அசைவுக்கரம் வகை
Ammeter	மின்னோட்ட அளவி
Firing order	எரிதல் வரிசை
Electric motor	மின்னோடி
Electric resistance	மின்தடை
Generator	மின்னாக்கி
Governor	கட்டுப்படுத்தி
Lead acid battery	காரீய அமில மின்கலம்
Starter motor	இயக்க முன்னோடி
Soft Iron core	தேனிருப்பு உள்ளகம்

BAE_Glossary.indd 272 01/11/2022 12:24:33 PM

Storage battery	சேம மின்கலம்
Transformer	மின்மாற்றி
Generating system	உற்பத்திப் பிரிவு
Separators	இடைநிறுத்திகள்
Vent holes	காற்றுத் துவாரங்கள்
Charging	மின்னேற்றம்
Discharging	மின்னிறக்கம்
Rating	தீர்வை முறை
Rectifier	மின்திருத்திக்கருவி
Horn	ஒலிப்பான்

BAE_Glossary.indd 273 01/11/2022 12:24:33 PM

Class XII – Basic Automobile Engineering
Theory & Practical
List of Authors and Reviewers

Acadamic Advisor & Expert

Dr. P. Kumar,
Joint Director (Syllabus),
State Council of Educational Research and Training,
Chennai.

Domain Experts

Dr. E. Natarajan,
Prof., Dept. of Mechanical Engineering,
College of Engineering Guindy,
Anna University, Chennai.

Dr. P. Vijayabalan,
Prof., Dept. of Mechanical Engineering,
Hindustan Institute of Technology & Science,
Kelampakkam, Chennai.

Translators & Experts

Dr. M.S. Senthil kumar,
Associate Professor,
Department of Automobile Engineering,
MIT, Anna University, Chennai.

Dr. K. Arunachalam,
Associate Professor,
Department of Automobile Engineering,
MIT, Anna University, Chennai.

Reviewer

Dr. N.V. Mahalakshmi,
Professor,
Department of Mechanical Engineering,
Anna University,
Chennai.

Authors

Er. R.S. Muralidharan
Vocational Instructor,
T.V.S. Higher Secondary School, Madurai.

S.S. Suthan
Vocational Instructor,
Nadar's Sundara Vishalakshi Vidyasala Boys
Higher Secondary School,
Pattiveeranpatti, Dindugal District

Er. P. Saravanan,
Vocational Instructor,
Neelambal Subramaniam Hr. Sec. School, Salem.

Er. R. Muthu Kumar
Vocational Instructor,
Palani Gounder Higher Secondary School,
Nachimuthu Polytechnic College Campus,
Pollachi, Coimbatore District.

Er. A. Pandian,
Vocational Instructor,
Neelambal Subramaniam Hr. Sec. School, Salem.

Er. R. Thiruvenkadaswamy
Vocational Instructor,
Shri K. Krishnaswamy Naidu Memorial Higher Secondary School,
Coimbatore.

N. Manavalan,
Vocational Instructor (Retd.),
General Cariappa Hr. Sec.School, Chennai.

Academic Coordinators

A. Ilangovan,
Lecturer,
DIET, Thirur, Thiruvallur District.

P. Malarvizhi,
B.T. Assistant,
PUMS, Padiyanallur, Thiruvallur District.

Art and Design Team

Layout Designing and Illustration)

Udhaya Info, Chromepet, Chennai

Wrapper Design

Kathir Arumugam

Quality Control

V.S. Johnsmith

Coordination

Ramesh Munisamy

Data Operator

M.S. Vaahitha
M. Aswini

QR Code Management Team

J.F. Paul Edwin Roy
B.T. Asst.,
PUMS Rakkipatti, Veerapandi, Salem Dist.

A. Devi Jesintha
B.T. Asst.,
GHS., N.M. Kovil, Vellore.

M. Murugesan
B.T. Asst.,
PUMS, Pethavelankottagam,
Muttupettai, Thiruvarur.

This book has been printed on 80 G.S.M.
Elegant Maplitho paper.

Printed by offset at:

BAE_Contributors.indd 274 01/11/2022 12:28:11 PM