GOVERNMENT OF TAMIL NADU

HIGHER SECONDARY SECOND YEAR

VOCATIONAL EDUCATION

Basic Electrical Engineering

THEORY & PRACTICAL

A publication under Free Textbook Programme of Government of Tamil Nadu

Department of School Education

Untouchability is Inhuman and a Crime

Government of Tamil Nadu

First Edition - 2019

Revised Edition - 2020, 2022, 2023

Reprint - 2021, 2024

(Published under New Syllabus)

NOT FOR SALE

Content Creation

State Council of Educational Research and Training

© SCERT 2019

Printing & Publishing

Tamil NaduTextbook and Educational Services Corporation

www.textbooksonline.tn.nic.in

PREFACE

We are living in a modern world where all the systems are interconnected for effective performance. By the year 2050, the demand of electrical energy is double or even becomes triple due to the advancement in Electrical Technology. Now-a-days affordable knowledge is essential in the field of electrical sciences for better understanding of electrical appliances.

This book has been written primarily as a text book for the higher secondary vocational students and is designed to serve the introductory part of electrical engineering. The basic concepts of electrical sciences are explained with neat diagrams for better understanding. This book is intended for the clear understanding of electrical engineering and its applications.

This book has been written in a simple language and easy to understand by the students. Various stages of the electrical system such as generation, transmission, distribution and utilization of electrical power is clearly written and the concepts are described with color diagrams. This book is made to meet the requirements of International standards and made to compete with the global level.

The chapters are designed and formulated from the inspiration and interaction of experts from India and abroad in the field of Electrical Engineering. The design of the book is based on bloom's taxonomy which is a learning tool for all students. The concepts available in this text book obviously motivate the students for better understanding. The contents of this book are mainly confined to the content of syllabus fulfilling the objectives an electrical engineer.

CONTENTS

	Title	Pages	Month
	Preface	iii	
Unit01	Power transmission and distribution	**1-16**	June
Unit02	Engineering Materials	**17-26**	July
Unit03	DC Machines	**27-39**	July
Unit04	AC machines	**40-55**	August
Unit05	Starters and controlling devices	**56-66**	August
Unit06	Electric drives	**67-77**	September
Unit07	Control Panel Board& PLC	**78-93**	October
Unit08	DC and AC Windings	**94-111**	October
Unit09	Earthing	**112-126**	November
Unit10	PROJECT	**127-133**	December
	Model Question Paper	**134-136**	
	Practicals	**137-186**	

ZNYP5

E-book

HGN70

Assessment



UNIT 01

Power transmission and distribution

LEARNING OBJECTIVE

Alternating current (AC) and direct current (DC) supply play a vital role and are more important to study the applications of these supplies in our life. This lesson has dealt with the methods of power supply of both AC and DC power transmission and distribution, advantages and disadvantages.

- Understanding the concepts of electric power transmission and distribution
- Application of electric power in residential, commercial and Industrial

TABLE OF CONTENTS

1.1 Introduction to Power transmission and distribution
1.2 Types of power transmission system
1.3 Primary and secondary transmission
1.4 Overhead line and underground cable transmission, single phase and three phase main components-types
1.5 Power distribution systems
1.6 Applications of electric power distribution
1.7 Conclusion

1.1 Introduction to Power transmission and distribution

Power distribution is one of the most important for power system. Sub transmission is the efficient and economical method of power between power transmission and distribution. The power is transmitted through the overhead line and underground cable. These types of transmission have their own electrical properties and have significant effects during power distribution.

The properties of various types of electrical power stages are explained as high voltage and low voltage transmission (HT & LT), overhead transmission and underground cables are explained. Let us see the various types of poles, insulators, and protective devices.

1.1.1 Necessity of electric power transmission and distribution

Power transmission is the large scale movement of electricity at high voltage levels from a power plant to a substation. Whereas power distribution is the conversion of high voltage electricity at substations to lower voltages that can be distributed and used by private, public and industrial customers.

Electric power transmission systems distribute the power from generating station to the consumers. If no Electric power cause losses and it affectes day-to-day life.

1.1.2 Method of Electric power transmission system

i. DC transmission system
ii. AC transmission system
    a) Single phase AC transmission system
    b) Three phase AC transmission system

1.2 Types of power transmission system

Electrical Power transmission plays vital role in the power supply system. There are three main areas of power system. They are power generation, transmission and distribution. Transmission is done by

i. Overhead lines
ii. Underground cables

1.2.1 DC Transmission system

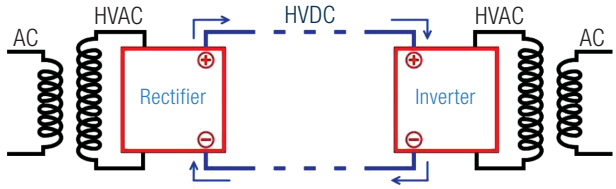

FIG. 1.1 Schematic diagram of DC transmission

The transmission of DC power from the AC power is shown in above.

The single line diagram of high voltage direct current transmission is given in fig 1.1. Alternating current is generated and stepped up to high voltage through the sending end transformer. This high voltage AC is converted to DC by a mercury arc rectifier. The transmission of electric power is carried out at high DC voltage. In the receiving end, the DC voltage is converted into AC through the help of thyratrons. This alternating current is reduced to low voltage with step-down transformer for distribution.

1.2.2 AC transmission system

a) Single phase AC transmission system

Single-phase power consists of two-wire AC power circuit. Typically, there is one phase and one neutral wire, with current flowing between the power to the load and the neutral wire. (Ref fig 1.2)

Single-phase distribution is used for domestic purpose (Lights, motors and other heating appliances). Standard frequency of single-phase power system is 50 Hz

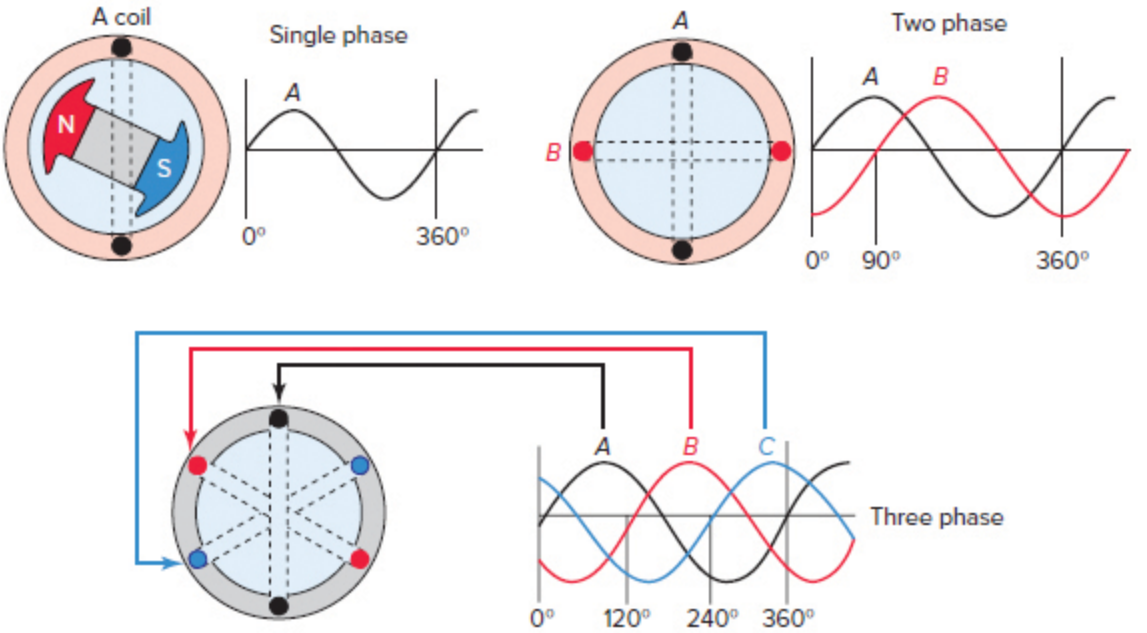

FIG. 1.2 AC Single phase power supply system

b) Three phase AC transmission system

From the power generating stations, a large quantity of AC supply is produced and is transmitted through transmission lines. Fig. 1.2 shows the layout of a typical AC power supply system. The existing transmission is by 3 phase 3 wire and 3 phase 4 wire systems.

Three-phase power can be defined as the common method of AC power generation, transmission, and distribution. It is a type of poly phase system and is the most common method used by electric grids worldwide to transfer power.

The generator generates voltage and three phase supply is received through transformer. In India, the frequency adopted is 50 Hz and the phase angle is of 120° as shown in fig. 1.3.

There are two types of connections, namely delta (Δ) connection and star (Y) connection. The load can be connected either in delta or star.

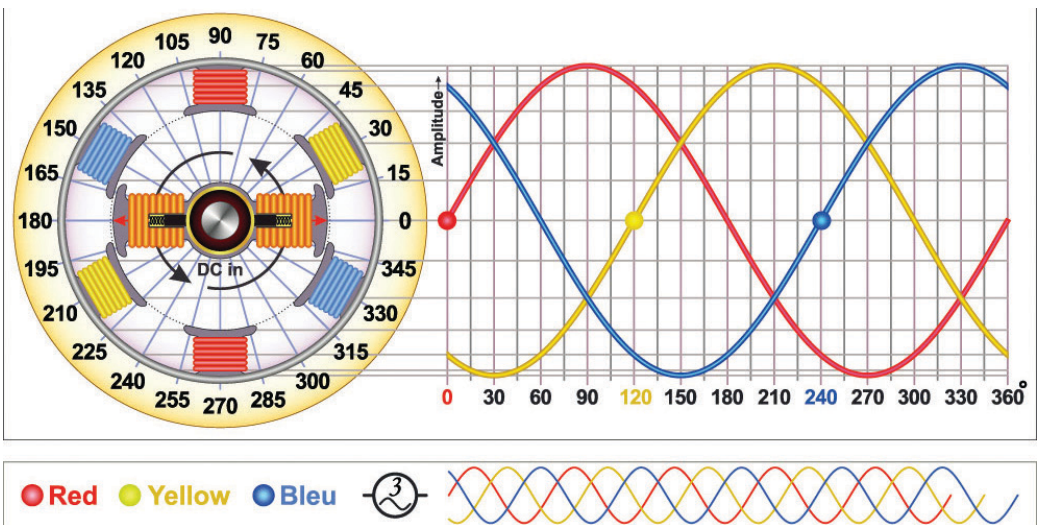

FIG.1.3 Three phase AC transmission system

i Star connection

The star connection requires four wires in which there are three phase conductors and one neutral conductor as shown in fig. 1.4. This type of connection is mainly used for long transmission because it has a neutral point. The neutral point passes the unbalanced current to the earth and makes the system balance.

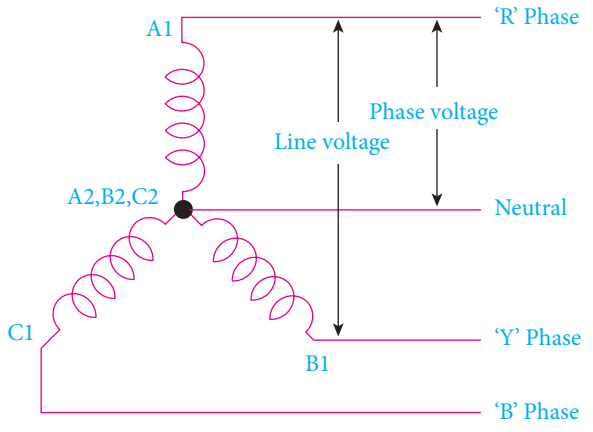

FIG.1.4 Star connection

The star connected three phase system gives two different voltages, i.e., the 230 V and 440V. The voltage between the single phase and the neutral is 230V, and the voltage between phase to phase 440V.

ii Delta connection

The delta connection has three phase wire and no neutral as shown in fig. 1.5. The line voltage of the delta connection is equal to the phase voltage. $V_L = V_P$

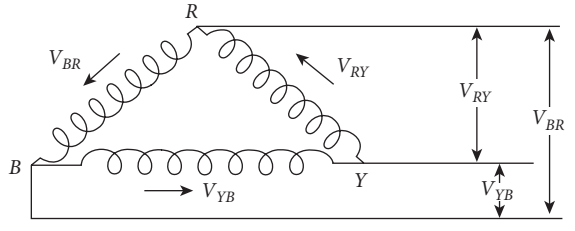

FIG.1.5 Delta connection

1.2.3 Advantages and Disadvantages of DC transmission

a) Advantages

1. Two conductors are sufficient for distribution of power supply.
2. There is no inductance and capacitance.
3. No skin effect in DC transmission lines.
4. The corona loss is less as compared to AC system.
5. Voltage drop is very low.

b) Disadvantages

1. It is difficult to produce high voltage
2. The voltage cannot be increased or decreased by using a transformer

1.2.4 Advantages and disadvantages of AC transmission

a) Advantages

1. AC can produce voltage (33 KV) to a maximum level.
2. The voltage can be increased or decreased.
3. High voltage transmission reduces losses.
4. It is easy to maintain in sub-stations.
5. Its cost is cheap.

b) Disadvantages

1. The AC line has the capacitive and inductive effect.
2. Due to skin effect, it requires more conductors.
3. The construction of AC transmission is complicated.
4. More copper conductors are required for transmitting AC.

1.3 Primary and Secondary transmission

Electricity is generated in power plants, which transmits through different levels and finally it reaches to consumers. Generated power is transmitted by stepping up or stepping down by using transformers. The power generating plants are located at Kalpakkam, Koodankulam (Nuclear power station), Neyveli (Thermal power station), Bhavani sagar Dam, Pykara, Mettur Dam (Hydro power station) and Kamuti (Solar power station) etc, The generated power is distributed to the consumers through the substations by transmission lines.

Two types of transmission are

i. Primary transmission
ii. Secondary transmission

1.3.1 Primary transmission

In primary transmission, the voltage produced from power plants, transmitted over the transmission lines to the substations with the help of step-up transformer.

1.3.2 Secondary transmission

The voltage transmitted by the primary transmission is reduced by a step-down transformer is transmitted to the sub-stations in the city is known as secondary transmission

1.4 Overhead line and underground cable transmission, single phase and three phase main components-types

Overhead line transmission

The overhead lines are used to transmit electricity from power generating station to consumers. A network of electrical power lines are used to transmit the electricity over a geographic area is called power grid. The electric power transmission system for single phase is of two conductor viz. phase and neutral as shown in fig 1.6.



FIG 1.6 Overhead transmission – Single phase system

a) Type of poles

Line supports or the poles which hold the conductors to a height they are above the ground level. In general, four types of poles are used, depending on the size and shape of the conductor used.

1. Wooden poles (Single phase)
2. Concrete poles (Three phase)
3. Tubular steel poles (Three phase)
4. Latticed steel tower (Three phase)

1) Wooden poles



FIG. 1.7 Wooden poles

Wooden pole type is used for LV transmission lines as in fig. 1.7. The limitations of wooden poles are that they must be straight, strong with gradual tapper and free from knots. These poles are cheap. Some portion of the pole below the ground level is coated with creosote oil. These poles are suitable for short spans between 40 m to 50 m and to a voltage level of 11 KV.

2) Concrete poles



FIG. 1.8 Concrete pole

The concrete poles are strong and reinforced with iron rods and it is shown in fig 1.8. It has high mechanical strength and durable. These poles are used for longer spans (80 m to 100 m). The maintenance cost is very low. These types of poles are used for transmission of power up to 33 KV.

3) Tubular steel poles

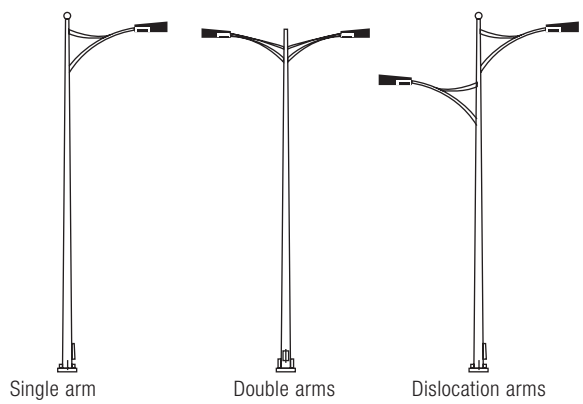

FIG. 1.9 Tubular steel poles

The iron tubular pole is shown in fig 1.9. It is stronger than the concrete pole. The poles are coated with zinc. Since it is circular in shape, the pressure due to air is less. Earthing is required for this type. It is suitable for low voltage and the span is 50 m to 80 m.

4) Latticed steel tower



FIG. 1.10 Latticed steel tower

A Latticed steel tower is shown in fig. 1.10. It is having high strength, designed for transmitting power to long distance and durable. It is used for HT voltage and the span is 100m to 300m.

b. Main components used in overhead lines

1. Electric conductors
2. Poles and towers
3. Insulators
4. Cross arm that holds electrical insulation materials
5. Transformer, lightning arrester, blocking barriers to the pole and circuit breakers

c. Transmission line conductors

Electric power is transmitted from power generating station to the consumers through conductors. Copper, aluminium, steel, Aluminium Conductor with Steel

Reinforced (ACSR), are exclusively used as line conductors.

d. Properties of conductors

1. High electrical conductivity
2. High tensile strength
3. Low cost
4. Less weight

The properties of Copper, Aluminium and ACSR conductors are detailed below.

i) Copper

Copper is used to transmit large quantity of electricity from one place to another. Hard-drawn copper is often used for power transmission, because it is twice as strong as soft drawn copper. Hard drawn conductor has high conductivity with less cross-sectional area is used. It has low specific resistance and durable.

ii) Aluminium

Next to copper, Aluminium is having high conductivity. It is cheaper than copper and less in weight. But conductivity of aluminium is 60% as that of copper. Its diameter is about 1.27 times thicker than that of copper. The melting point of aluminium conductor is less.

iii) ACSR (Aluminium Conductor with Steel Reinforced)



FIG. 1.11 ACSR conductor

Aluminium conductor having a central core of galvanized steel wire is used for high voltage transmission purpose as shown in fig. 1.11. This ACSR conductor is mostly used for power transmission. It has high tensile strength and less sag.

1.4.1 Overhead transmission – Three phase system

Three-phase system consists of a three-phase voltage source connected to a three-phase load by means of transformers and transmission lines as in fig. 1.12.



FIG 1.12. Overhead transmission – Three phase system

a. Types of overhead lines

The overhead transmission lines are classified as

1) Short transmission lines –up to 50 km and line voltage about 20 KV
2) Medium transmission lines – 50 km to 150 km and line voltage 20 KV to 100 KV
3) Long transmission lines – more than 150 km and line voltage is 100 KV

b. Guarding

Low, medium and high voltage conductors can cause disasters, such as rain or storm which cause electrical accidents makes risk to life. When a live conductor is cut down, the earthed cradle part protects the life of human things. This part is called as guarding. When the conductor touches the guarding, the circuit breaker automatically disconnects the supply.

c. Line insulators

The overhead line conductors are supported with the poles and towers by means of insulators, to avoid leakage of current between the conductor to earth.

d. Properties of insulators

A good insulator possess the following properties.

1. Very high mechanical strength.
2. Its dielectric strength is very high.
3. Insulators must be free from internal defects such as impurities to leakage current.
4. Insulation value of the resistance is high.
5. Should not affect the environmental conditions.
6. Do not have porous.

e. Line insulator materials

Porcelain, glass, magnesium silicate etc. are used as line insulators. The porcelain is made by suitable heat in combination with plastic, white clay and glass. It is having good stability, smooth and free from porosity.

f. Type of Insulators

1. Pin type insulator
2. Suspension type insulators
   i. Hewlett suspension type
   ii. Cemented cap type
   iii. Core and link type
3. Strain type insulator
4. Shackle insulator
5. Stay insulator

Let us see the various types of insulators used in the transmission lines.

1) Pin type insulator



FIG. 1.13 Pin type insulator

This type of insulator as (in fig. 1.13) is fixed in the crossing arm of the pole. The conductor is tightened at the top of semi-circular groove. This type of insulator is used to hold the conductors in straight.

2) Suspension type insulator

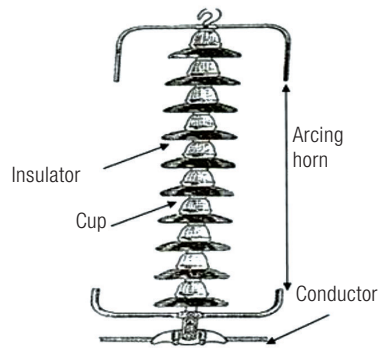

FIG. 1.14 Suspension type insulator

The suspension type insulator is connected to the steel tower as shown in fig. 1.14. The line conductor is connected at the bottom of the insulator. In this type, a number of similar units are connected one over one by bi-metallic links. This type of insulator is designed up to 11KV. Usually three types of suspension insulators are used.

i. Hewlett type
ii. Cemented cap type
iii. Core and link type

3) Strain type insulators

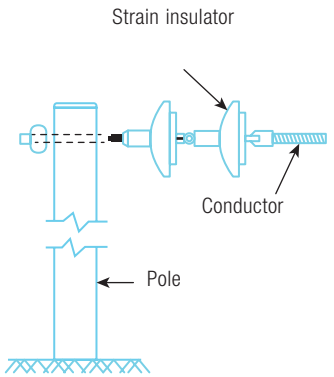

FIG. 1.15 Strain type insulator

Strain type insulator is as shown in fig. 1.15. These insulators are used in places where there are having very high tensions such as dead ends, sharp curves, corners and line which crosses the river. This type of insulator can be used for low voltages up to 11 KV. For the longer spans across river, two or more strings of insulators are connected in series. For high tension two or more strings of insulators were used in parallel.

4) Shackle insulator

A Shackle insulator is as shown in fig. 1.16. This type of insulator is commonly used for low voltage distribution lines. Such insulators can either be used in a horizontal position or in a vertical position.

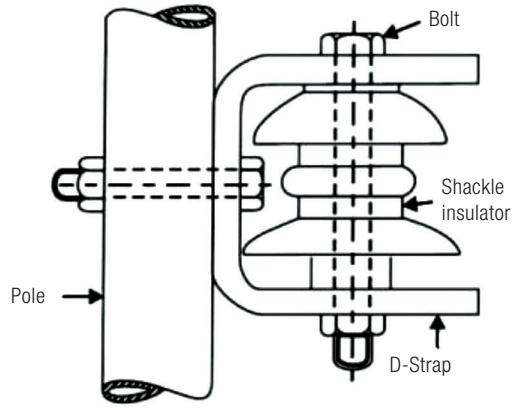

FIG. 1.16 Shackle insulator

5) Stay insulator



FIG. 1.17 Stay insulator

The insulator used with stay wires are called stay insulator. This type of insulator is as shown in fig. 1.17. It is made of porcelain. The size of insulator depends upon the tensile strength of stay wire. It is used to prevent the leakages from the poles up to 33KV. Stay insulators are provided to a height of 3m above the ground level.

1.4.2 Underground cable transmission system and its components

a) Underground cables

The power is transmitted from the generating station to the consumers by means of underground cables too. The underground cable consists of one or more conductor covered with suitable insulation and surrounded by a protecting core. Normally the number of cores in underground cables are 1, 2, 3, 3 ½ and 4.

i) Advantages of cables

1. Underground cables are not subjected to lightning discharges, thunder, storms, birds and other severe weather conditions.
2. As there is no tension on the conductor, it will not break due to any reasons after being installed. It reduces accidents.
3. Less maintenance.
4. There is no interference with tele-communication cables.

ii) Disadvantages of cables

1. The cost of installation is high.
2. High voltage cables are difficult to manufacture.
3. Difficult to join.
4. Identification of fault is difficult.

iii) Classification of cables

a. According to the rating of voltage the cables are classified into

1) Low tension cables up to 1 KV
2) High tension cable upto 11KV
3) Super tension cables 22 KV to 33KV
4) Extra high-tension cables 33KV to 66 KV
5) Oil filled cables 66KV to 132 KV
6) Extra super voltage cables beyond 132 KV

b. According to insulation, cables are classified into

1) PVC insulated cables
2) Mineral insulated cable
3) Paper insulated lead sheathed cable
4) Cross linked poly ethylene cable
5) Paper insulated lead covered double tap armoured cable

c. According to number of conductors, cables are classified into

1) Single core cable
2) 2 core cable
3) 3 core cable
4) 4 core cable
5) 3 ½ core cable

iv) Cross section of a cable



FIG 1.18 Cross section of a cable

1.4.4 Difference between Overhead line and Underground cables

Si. No.	Overhead Lines	Underground Cables
1	To increase the load, conductors can be included easily. To increase the working voltage, it is enough to change the insulator.	Change the new cable for two reasons like to increase the load and the conductors cannot be included easily.
2	If need, load can be easily increased.	Load cannot be increased, otherwise cable will get damage.

3	More space is required to install.	Less space is required to install.
4	Maintenance is easy.	Maintenance is complicated.
5	Easy to find the fault.	Difficult to find the fault.
6	Power factor loss is high.	Power factor loss is low.
7	It is suitable for long transmission	It is suitable for short transmission
8	It can be affected by lightning.	It cannot be affected by lightning.
9	Installation cost is low.	Installation cost is high.
10	It is cheap	It is costly.

1.5 Power distribution system

The generated power is distributed to the consumer through a step-down transformer, the feeder lines, distributors and service mains.

1.5.1 Single phase distribution system

Single-phase distribution systems are used for residential, small scale industrial and commercial applications.

Single-phase power distribution systems are classified as

1. Two wire system
2. Three-wire system

1.5.2 Three phase distribution system

The High voltage AC supply is stepped down in to three phase through three phase transformers. The three-phase distribution system is used in domestic, commercial and industries.

Three-phase power distribution systems are classified according to the number of phases and number of wires required. These systems are the three-phase, three-wire system and three-phase, four-wire system. The primary winding is not considered here. The three-phase three-wire system is used to supply motor to a load of 230 volts or 440 volts.

1.5.3 Feeder line

The feeder line is nothing but similar as power transmission conductors. It connects the power from sub-station and power supply to the consumers. The voltage is uniform throughout the conductor.

1.5.4 Distributor

Electric power is distributed to the consumer by tappings. Since electric power is taken from many tappings and the current is not uniform in all. Therefore, when designing the distribution system, care must be taken to the voltage drop.

1.5.5 Classification of distribution system

The distribution system is classified as,

1. Radial distribution system
2. Ring main distribution system
3. Grid or interconnected distribution system

1. Radial distribution system

In this system, each load junctions are connected through separate feeders and they are controlled by the sub-stations. This method is used when the low voltage exists in the centre of the city. If there is a fault in any feeder, the whole circuit will be affected.

2. Ring main distribution system

This system designed like a closed ring. Each load junctions were constructed one after another. Electricity is provided from two supply sources in different places for each load junctions. If one gets faulted, the other can be used to get power supply. This system is used in places where low and medium voltage is required. In this way there may be a chance of low voltage fluctuations happening for the consumers. Power supply can be provided by more than one feeder. Reliability can be generated by supply of electricity through each of the two feeders.

3. Grid or inter-connected distribution system

More than one power plants and sub-stations are connected in series feeders are called as Inter-connected distribution system. It is also called as grid. In this system, the power plant and sub-station are connected together, and the voltage is reduced to 33KV, by using transformer. This method increases the reliability and efficiency. Electricity can be provided from different power plants during high power consumption.

1.5.6 Service lines

Service line is low length connecting conductor. These service lines act as conductor between distribution pole and consumer.

1.6 Applications of Electric power distribution

Applications of Electrical power distribution can be classified as:

1. Residential application
2. Commercial application
3. Industrial application

1. Residential applications

In residential applications are toaster, refrigerator, microwave oven, washing machine, electrical chimney and other electrical appliances.

Fig. 1.19 shows how power generated from a generating station reaches its final destination, a residential area. It is stepped down to 240 volts using a step-down transformer. Only single-phase supply is used in a residential application.

1.6.2 Commercial applications

- Electricity is commercially used in the offices, stores, complexes and shopping malls. Usually commercial applications have higher demand of electrical power than residential applications. For commercial applications, the consumption of electric supply will be of high wattage of power to operate machines, elevators and conveyors.
- The large amount of power to distribute in safely by the way of highly insulated cables and bus ways are used. High rated service equipment is used in commercial application.

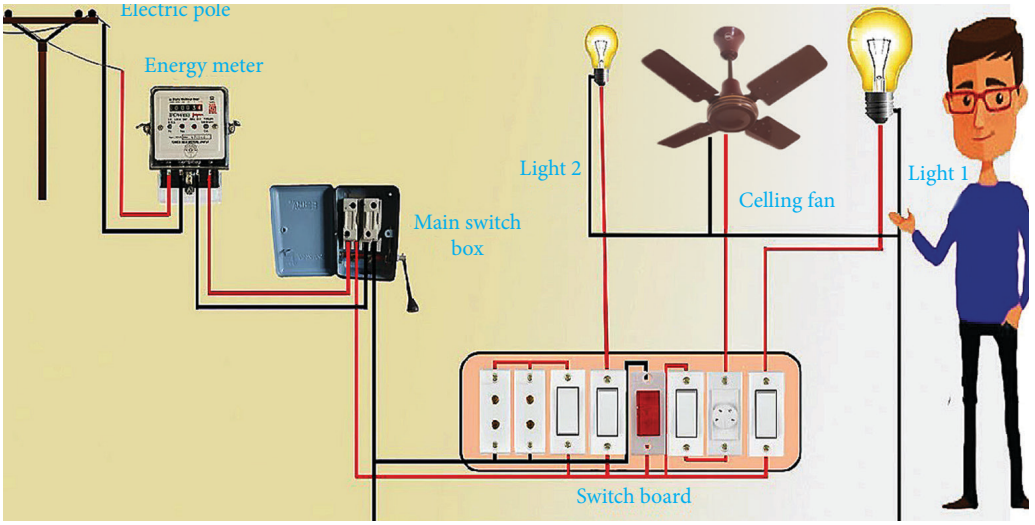

FIG. 1.19 Residential applications

- Panel boards and switch boards can be used in commercial application to distribute the power safely to the machines.

1.6.3 Industrial applications

Industrial areas require high quantity of electric power for the operation of high load motors, high wattage bulbs, halogens, air conditioners, and water coolers, cranes, milling machines and grinding machines (fig. 1.20). Industries requires high electric supply for operating the heavy loads.

1.7 Conclusion

In this unit, students can know about power transmission and distribution, its types, primary and secondary transmission, over load line and underground cable transmission single phase and three phase components, its types and the applications of electric power distribution.

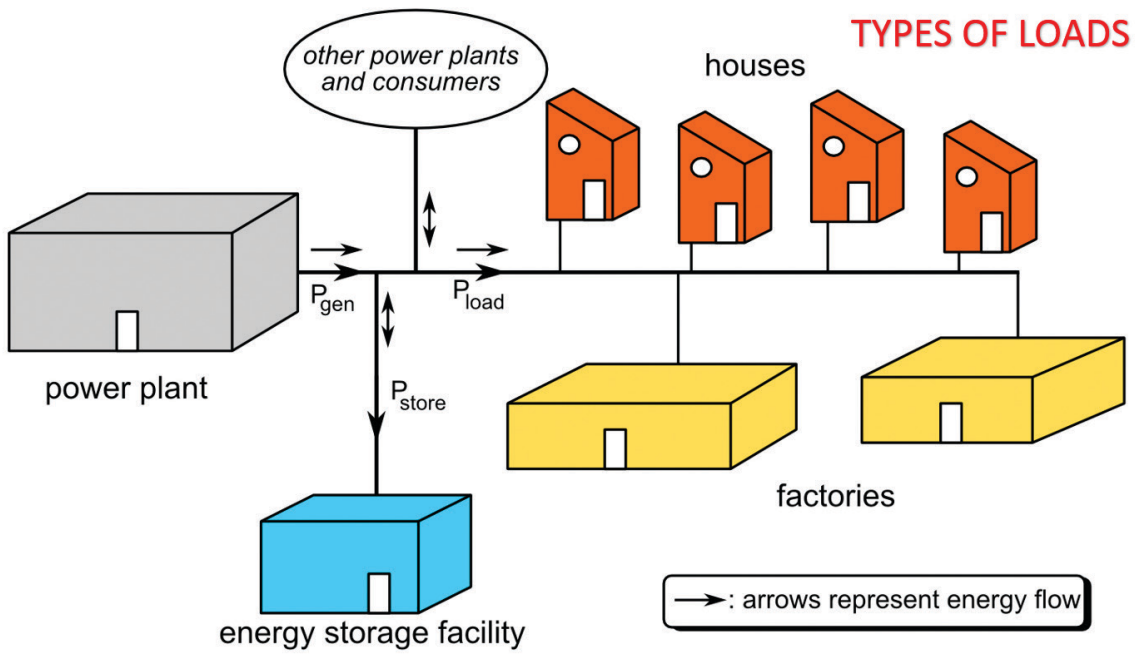

FIG.1.20 Commercial applications

POINTS TO REMEMBER

- The power supply from power plants to the consumers is called power transmission.
- A large amount of alternating current is produced at power stations.
- The specific resistance of copper is less than aluminium.
- Aluminium Conductor with Steel Reinforced is extensively used for power transmission..
- The Lattice steel tower is suitable for the distance between 100 meters and 300 meters.
- Types of guarding
  1) Cradle guarding
  2) Cage guarding
- The insulator used in the stay wire is called stay insulator.
- When electrical power is unable to transmit by overhead lines area underground cables are used.
- The underground cable is not affected by lightning

Activities



1. Students are motivated to do a small project in connected with solar energy. (By using LED lamp)

Glossary



Di-electric strength	மின்காப்பு வலிமை
Feeder lines	ஊட்டளிப்புத் தொடர்
Grid	வலையிணைப்பு (அ) மின்கட்டமைப்பு
Insulator	மின்காப்பான்
Peak load	உச்சக்கட்ட பளு
Regulation	ஒழுங்கு முறை
Power factor	திறன்காரணி
Receiving station	ஏற்பு நிலையம்

Evaluation

PART-A

(1 Mark)

Choose the correct option:

1. Which of the following is not the distribution system?
   a) 3 phase - 4 wire
   b) 3 phase - 3 wire
   c) Single phase - 3 wire
   d) Single phase - 4 wire

2. The disadvantage of constant voltage transmission is _____
   a) short circuit current of the system is increased
   b) load power factor in heavy loads
   c) large conductor area is required for same power transmission
   d) less current during short circuit

3. The voltage of low-tension transformer is
   a) 132 KV b) 220 KV
   c 33 KV d 400 KV

4. Generally which conductor is used for power transmission _____
   a) Steel b) Copper
   c) Aluminium d) ACSR

5. Wooden poles for supporting transmission lines are used for voltages up to _____
   a) 440 V b) 11 KV
   c) 22 KV d) 66 KV

6. Which of the following regulation is considered to be the best?
   a) 2% b) 30%
   c) 70% d) 98%.

7. The power transmission will be maximum while _____
   a) sending end voltage is more
   b) receiving end voltage is more
   c) reactance is high
   d) less corona loss

8. Stranded conductors are used for transmitting power to a high voltage because of
   a) increased tensile strength
   b) better wind resistance
   c) ease-in handling
   d) low cost

9. The frequency supply in India is _____
   a) 60Hz b) 70 Hz
   c) 50Hz d 45Hz

10. The angle between the two phase is ----------
    a) 180^0 b) 120^0
    c) 150^0 d) 90^0

11. Three phase transformer require ---------- coils
    a) 6 b) 8
    c) 3 d) 4

12. What is the voltage between phase and neutral?
    a) 200V b) 210V
    c) 220V d) 230V

13. What is the voltage between phase to phase?

a) 440V b) 430V

c) 400V d) 450V

PART-B (3 Mark)

Answer the questions in brief

1. What is meant by power transmission?
2. State some electrical power generating stations.
3. What are the advantages of DC transmission?
4. What are the disadvantages of AC transmission?
5. What are the advantages of high voltage transmission?
6. What are the properties of overhead line conductors?
7. Write short notes on ACSR conductor.
8. List out the types of electrical poles.
9. What are uses of guarding?
10. What are called service lines?

PART-C (5 Marks)

Answer the Questions not exceeding one page

1. What are the various methods of power transmission?
2. Write down the types of distributors.
3. What are the main objectives, advantages and disadvantages of underground cable for power distribution?
4. Draw the diagram of suspension type insulator.

PART-D (10 Mark)

Answer the Questions not Exceeding two page

1. Explain with a neat sketch about types of electrical poles.
2. Tabulate the differences between the overhead transmission lines and underground cables.



Reference book

1. A text book of 'Electrical Technology' Volume-III B.L.Theraja and A.K.Theraja, S.Chand & Company Ltd.



Reference internet source

1. http://www.wikipedia.org
2. https://www.electrical4u.com



UNIT 02

Engineering Materials

AKY5B

LEARNING OBJECTIVE

In this unit, the study regarding properties and the applications of engineering materials, classifications, properties of electrical and mechanical and its types with updated materials were to gain the knowledge in the field of engineering.

TABLE OF CONTENTS

2.1 Introduction
2.2 Properties of engineering materials
2.3 Classification of engineering materials
2.4 Conducting and insulating materials
2.5 Conclusion

2.1 Introduction

A material is a substance used to make physical things. The term property means quality, which defines the specific characteristics of a material. Materials have different properties and characteristics depending on what they are used for.

2.2 Properties of engineering materials

Properties of materials can be classified under several heads. As a matter of fact the following classification of materials are important for an engineer, to select a suitable material for the specific purpose.

2.2.1 Physical properties

Physical properties determine the micro and macro structure of the materials.

Example: shape, size, colour, lustre, density, structure, finish, etc.,

2.2.2 Electrical properties

Electrical properties determine the ability of material to permit or resist the flow of electricity.

Ex: conductivity, resistivity, di-electric, insulation, etc..

2.2.3 Magnetic properties

Magnetic properties determine the property of the materials with presence of applied magnetic field.

Ex: permeability, retentivity, hysteresis, temperature, etc..

2.2.4 Optical properties

Optical properties of a material determines about a material under the action of light.

Ex: emission of light, absorbance, colour luminosity, photo sensitivity, reflecting, refractive index, scattering, transmission etc.

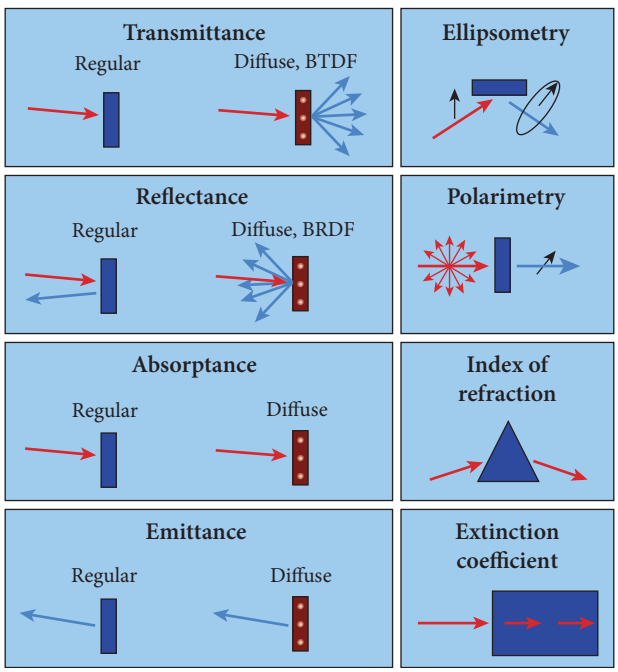

FIG 2.1 Optical properties

2.2.5 Chemical properties

Chemical properties determine the corrosion rate, chemical reaction rate of material.

Ex: corrosion resistance, reactivity, chemical composition, PH, hydroscope etc.

2.2.6 Thermal properties

Thermal properties determine the property of the materials when they are subjected to thermal changes.

Ex: specific heat, thermal conductivity, thermal expansion, thermal stress, thermal shock, latent heat, specific heat, etc..

2.2.7 Mechanical properties

Mechanical properties are the properties which dealt about the behaviour of material under force or load.

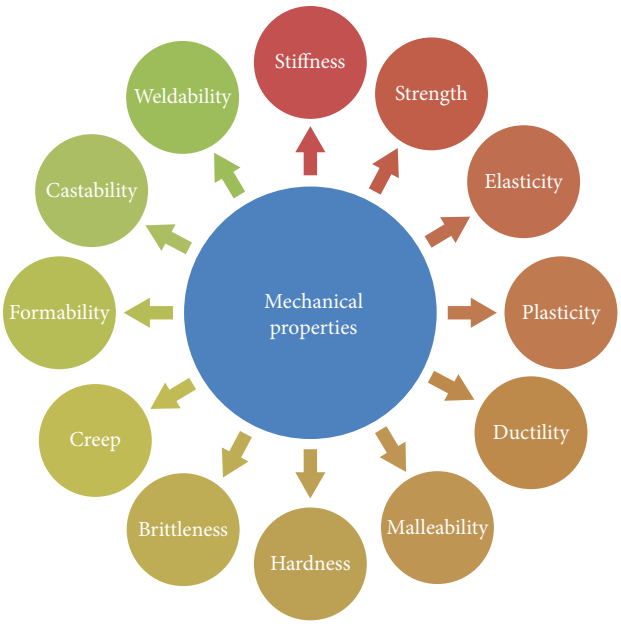

FIG 2.2 Mechanical properties

i) Strength

It is defined as the ability of a material to resist loads without failure and fracture.

ii) Stiffness

It is defined as the ability of a material to resist deformation or deflection under load.

iii) Elasticity

The property of a material gets deformation when the load is applied and then back to its original shape after the load is removed. Stiffness within the elastic limit is known as elasticity.

iv) Plasticity

The ability of a material gets deformed due to load and retain to a new shape after the load is removed is called plasticity.

v) Ductility

The property of a material to be deformed without rupture under tensile load is called ductility. Materials possessing ductility can be drawn into thin wire.

vi) Brittleness

The property of sudden fracture without any deformation is called brittleness.

vii) Machinability

The ease in which a given material may be shaped into required shape with the tools is called machinability.

viii) Hardness

The ability of material to resist scratching or indentation by another hard object is called hardness.

ix) Toughness

The ability of a material to resist energy and gets fracture during the plastic deformation is called toughness.

x) Malleability

The ability of material gets deformed without rupture with compressive load is called Malleability. Malleable materials can be hammered and rolled into required measurement of thin sheets.

xi) Creep

The slow and progressive deformation of a material to a long time with a constant stress is called creep.

xii) Fatigue

Failure of materials under repeated stress is called fatigue.

xiii) Resilience

The capability of a strained body to recover its size and shape, after deformation by compressive stress is called resilience.

2.2.8 Points to be kept in mind before selecting engineering materials

The substances which are essentially used in the field of engineering are called engineering materials. Following criteria's are required for selection of engineering materials.

- Availability of material
- Cost of material
- Sustainability
- Ease of manufacture
- Compatibility
- Reliability
- Recyclability

2.3 Classification of Engineering Materials

The Engineering materials are classified into Metals, Non- metals and Alloys. It plays an important role in the field of engineering and in industries. Non- metals are classified as polymer and ceramics.

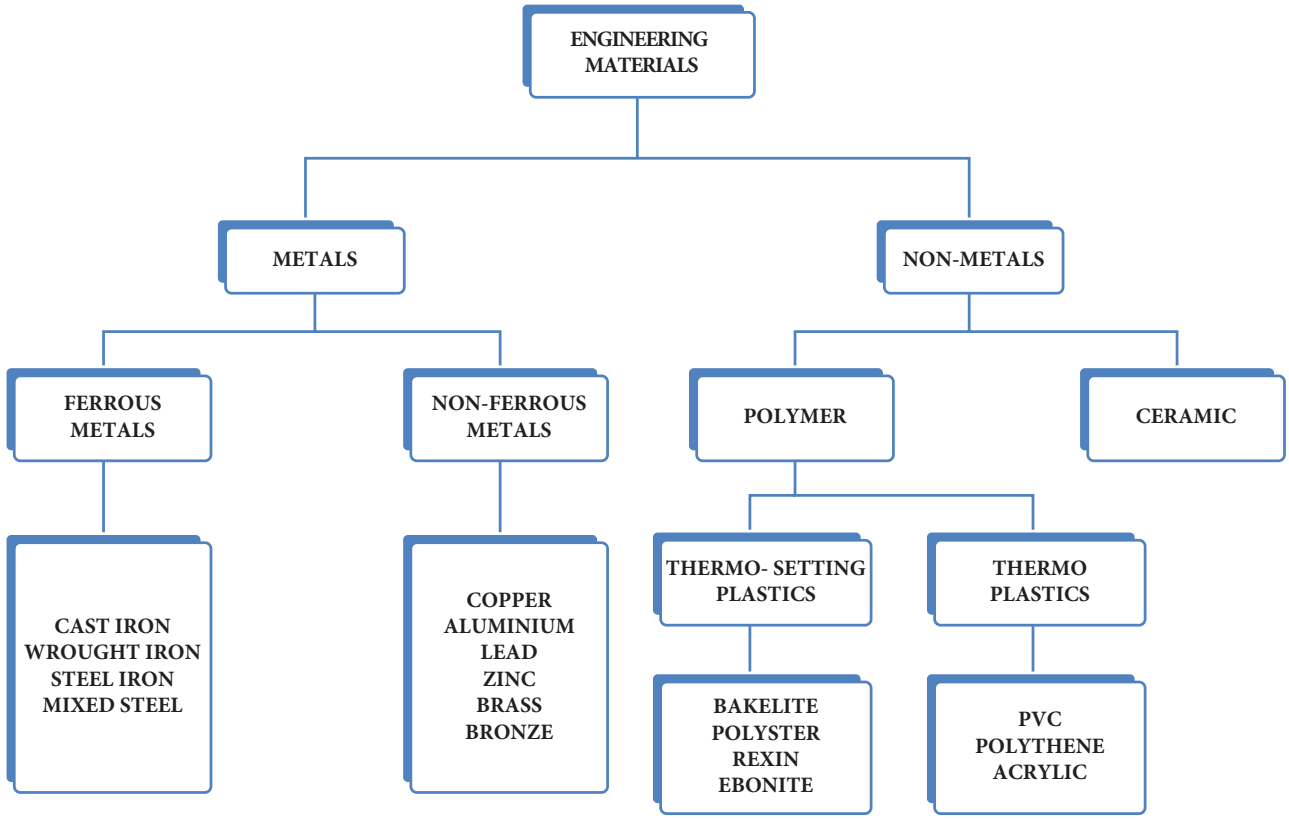

FIG 2.3 Classification of engineering materials

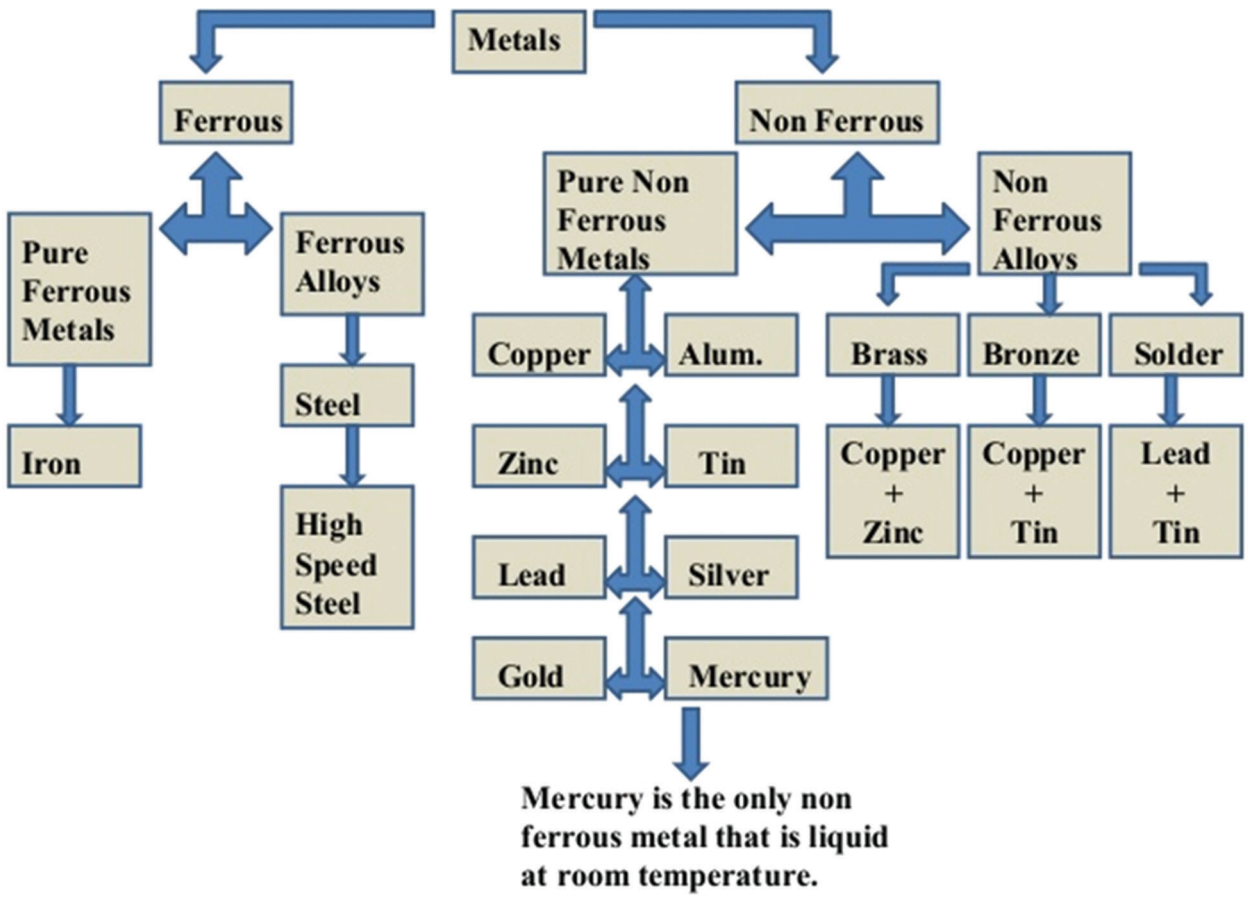

FIG 2.4 Classification of metals

i. Ferrous metal

The metal which contains iron as its main constituent is ferrous metal.

Example: Cast iron, wrought iron and steel.

The ores of iron are hematite, magnetite, limonite and siderite. The main ore is hematite.

Indians have specialized in metallurgy of iron and steel manufacturing. Asoka's pillar at New Delhi and Puri Jagannath temple shows the intellectual skill of Indians in the field of Engineering.

ii. Non- ferrous metal

The metals which contain other than iron are called non-ferrous metal.

Example: Copper, Aluminium, Zinc, Lead, Tin, Platinum, Silver, Gold, Tungsten.

iii. Alloy metal

Alloy metals are the metals where two or more metals are mixed.

Example: Brass, Bronze, Stainless steel and Nichrome.

2.4 Conducting and insulating materials

Conductivity is the property of a material which allows the electric current to flow. Conducting materials are classified into low resistivity, high resistivity and zero resistivity.

2.4.1 Conducting materials

Silver: Used in contact surface of switch gears and circuit breaker points

Copper: Used in winding, wires, transformer and in transmission lines.

Aluminium: Flexible in nature used for wires, bus bars and wiring.

Tungsten: Filaments in bulb.

Platinum: Used in thermo couple as constant material

Manganese: Used in standard resistance and shunts.

Constantine: In Thermo couples, Rheostats and starters for electric motors.

Nichrome: Used as heating element in all heating appliances.

Carbon: Used as brushes in electrical machines.

2.4.2 Comparison of Copper and Aluminium

Factors	Aluminium	Copper
Colour	Silverly white	Reddish brown
Density	2700 kg/m^3	8900° kg/m^3
Melting point	660°C	1085°C
Resistivity	2.65 x $10^{-6}\Omega$-m	1.72 x $10^{-6}\Omega$-m

2.4.3 Advantages and disadvantages of aluminium

a. Advantages

- Cheaper
- 1/3 Lighter than the weight of copper.
- Softer.
- Non-reactive to acids.
- Availability - Aluminium is the third most abundant element available in nature. It consists of 7.28% of earth crust.

b. Disadvantages

- Higher resistivity: Due to high resistivity, aluminium is not used for winding.
- Having high contact resistance.
- Tensile strength is very poor.
- Possibilities for getting loose contacts.

2.4.4 Advantage and disadvantage of Copper

a. Advantages

- Light in weight.
- Safe, Formable and dependable.
- Easy to join and durable.
- 100 % Recyclable.

b. Disadvantages

- Susceptibility to corrosion. i.e., Oxidation.
- Price is costly.

2.4.5 Insulating materials

i. Solid insulating materials

a) Plastics

It is an organic polymer, which can be moulded into desired shape and size with the heat and pressure or both. The plastic in liquid forms is known as resin. There are two types of plastics namely Thermo plastic and Thermo set plastic. Thermo plastic can be softened and hardened by heating and cooling by any number of times. (e.g.) Polythene, PVC, Acrylic. Thermo set plastic cannot be softened once they are moulded. It is formed by condensation and polymerization. E.g. Polyester, Bakelite, Epoxy

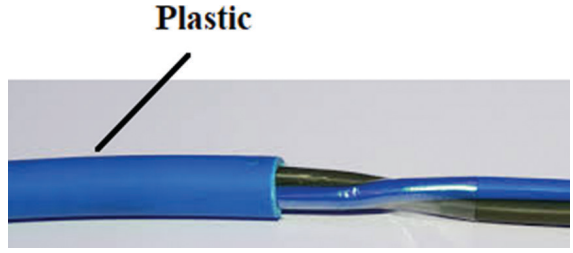

FIG 2.5 Application of Plastic

b) Ceramics

Ceramics are inorganic, non-metallic, covalent compounds. They are produced from earthy material clay by the heat treatment of fire. Refractories and glasses are the types of ceramics. Porcelain is used as an insulators in transformer bushing pin, switches, fuse holder, socket, discs of electric stove, kettle and in heating element. Aluminium is an important refractory material used in furnaces. Silica glass, fibre glass, Pyrex are important glass insulation materials used in capacitor, radio & TV tubes, lamps and in laminated boards.

c) Rubber

Rubber is an organic polymer, which elongates on stretching and regains its original shape after the removal of the stress. Rubber may be classified as natural rubber and synthetic rubber.

d) Mica

Mica is a compound of aluminium silicate with soda potash and magnesium. It has high dielectric strength and low power loss. Mica is used in tapping stator coils, electric irons, hotplates, toasters, motor slot lining and transformer insulation.

e) Asbestos

It is a natural material having fibrous structure, low dielectric strength and high dielectric loss. It is used in electrical machines to withstand temperature.

2.4.6 Liquid insulating materials

a) Mineral insulating oils

These oils are obtained from distillation of crude petroleum. It has high oxidation resistance and good thermal stability.
This oil is used as an insulator and cooling agent in a transformer (winding and core).

b) Synthetic insulating oils

Compared to mineral oil, these oils are very cheap and inflammable. Askarel is used as coolant in High Voltage transformer (upto 110° C) Aroclors, sovoland sovtol are other synthetic insulating oils.

2.4.7 Gaseous insulating materials

a) Air

It is an important insulating material available in nature used in HT lines and capacitor.

b) Nitrogen

It is chemically inert, prevent oxidation and reduce deterioration. It is used in oil filled transformers, capacitors and in cables under pressure.

c) Inert Gases

They are used in electronic tubes and discharge tubes as insulators.

2.4.8 Optical materials

Optical materials are currently important for communication. In this, an entire network of optical fibre, LED's, LASER and detectors were installed for transmission of voice and data. Optical disk recording with semi conductor, laser playback are replacing the conventional piezo electric pickups.

2.4.9 Optical materials and their application

Technology	Application
1. Optical communication	
i) Wave guides	To guide the light inside the fibre by total internal reflection (eg. optic fibre cable)
	To modulate the intensity or phase of light by an electric field / magnetic field / ultrasonic waves
ii) Optical modulator	To do fast switching
	To produce light
iii) Optical switches	
iv) Optical source	
2. Energy convertors	To convert light energy into electrical energy (solar panel, silicon, selenium sulphate)
3 Thermal energy detectors	To detect thermal radiation
4 Display device	To display electrical signal in the visual (eg LED, LASER)
5 Optical fiber sensor	To measure mechanical quantities like displacement, acceleration, pressure & electrical quantities likes field strength, current

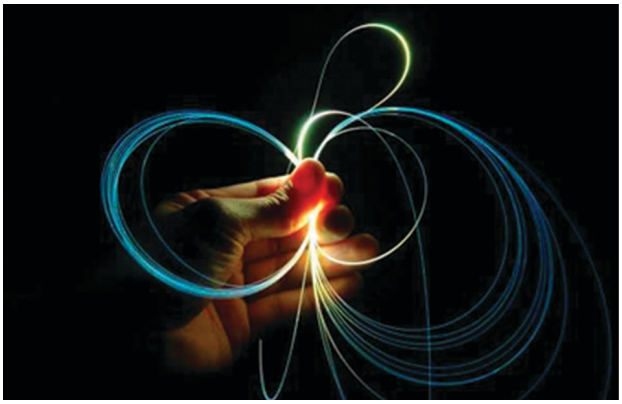


FIG 2.6 Examples of optical fibres

2.5 Conclusion

In this unit, we have gained the knowledge about the properties of engineering materials, classification of engineering materials and the conducting and insulating materials were updated with the sources provided.

Activities

1. Collect any 15 insulating materials?

Glossary

Engineering materials	பொறியியல் பொருட்கள்
Metal alloy	உலோக கலவை
Stiffness	விறைப்புத்தன்மை
Elasticity	நெகிழ்வுத்தன்மை
Plasticity	உருமாறும் தன்மை
Ductility	கம்பியாக நீளும் தன்மை
Brittleness	நொறுங்கும் தன்மை
Toughness	கெட்டிப்புத் தன்மை
Malleability	தகடாகும் தன்மை
Creep	தொய்வு
Fatique	நொந்தக் களைப்பு

PART A (1 Mark)

Choose the correct answer

1. Steel is an example for_____
   a) Non metal
   b) Ferrous metal
   c) Non-Ferrous metal
   d) Alloy metal
2. Which one of the following is an alloy _____
   a) Cast iron
   b) Copper
   c) Brass
   d) Platinum
3. Which of the following are the thermal properties of materials?
   a) Fatigue
   b) Specific heat
   c) Thermal conductivity
   d) Creep
4. Zinc is an example of _____
   a) Non metal
   b) Ferrous metal
   c) Non-ferrous metal
   d) Alloy
5. Refractive index and reflectivity are properties of material is known as _____
   a) Mechanical
   b) Thermal
   c) Chemical
   d) Optical
6. Which one of the following is an organic material _____
   a) Zinc
   b) Iron
   c) Silicon carbide
   d) Wood
7. Shape and density are properties of materials is known as _____
   a) Physical
   b) Chemical
   c) Mechanical
   d) Electrical
8. Which state of material resists tension, compression and shear stress?
   a) Gaseous
   b) Liquid
   c) Solid
   d) Heat
9. Which of the following metals are both malleable and ductile_____
   a) Copper
   b) Cast iron
   c) Porcelain
   d) Zinc
10. The following list gives the four metals Gold (Au), Silver (Ag), Aluminium (Al) and Copper (Cu) arrange the metals in the increasing order of resistivity.
    a) Ag, Cu, Au, Al
    b) Au, Ag, Cu, Al
    c) Ag, Au, Cu, Al
    d) Cu, Ag, Au, Al

11 Aluminium is found _____ percentage of earth crust

a) 7.28

b) 8.27

c) 7.82

d) 8.72

12 Which one of the following is used as energy convertor in optical materials?

a) Optic fibre cable

b LED

c) LASER

d) Solar panel

13 Most widely used conducting materials are____

a) Gold and silver

b) Copper and aluminium

c) Copper and silver

d) Gold and platinum

PART B (3 Mark)

Answer the questions in briefly

1. List out the broad classification of the properties of engineering materials.
2. Write short notes on types of metals.
3. Differentiate Thermo setting plastic and Thermo plastic.
4. State the different properties of material.
5. Write down the thermal properties of materials.
6. What is meant by optical properties and give some examples?
7. State the factor to be considered for the selection of materials for engineering applications.

PART C (5 Mark)

Answer the questions not exceeding one page

1. Explain the various properties of engineering materials.
2. Tabulate the applications of optical materials and technology.
3. Explain the types of conducting materials.
4. Compare the properties of copper and aluminium

PART D (10 Mark)

Answer the questions not exceeding two page

1. Explain the mechanical properties of materials.
2. Explain the classifications of engineering materials.
3. Explain the classifications of insulating materials.



Reference Book

1. 'An introduction to Electrical Engineering Materials' by Dr. C.S. Indulkar and Dr. S. Thiruvengadam, 4th edition, S. Chand & company.



Reference Internet Source

1. https://www.electrical4u.com



UNIT 03

DC Machines

LEARNING OBJECTIVE

In this unit, the students can enable to:

- Understand the various parts of DC machines
- Know about the principle of operation of DC machine
- Know about the applications of DC machines

TABLE OF CONTENTS

3.1 Introduction
3.2 Construction of DC machines
3.3 DC generators
3.4 DC motor
3.5 Conclusion

3.1 Introduction

DC machines are electro mechanical energy conversion devices which functions as generators which converts mechanical energy to electrical energy. It can also operate as DC motors, taking electrical energy from DC supply and converts to mechanical energy. DC motors are widely used in electric traction, cranes, etc. The extension of these DC machines leads to the development of brushless DC machines which are mostly used in modern scenario.

The electrical machines functions on AC supply are called AC machines. Functions on DC supply are called DC machines. In this unit, we will discuss the topics connected to DC machines.

DC machines are classified into two types:

1. DC generator
2. DC motor

3.2 Construction of DC machines

The construction of the DC generator and DC motor are same. Hence the DC generator can be treated as DC motor. The construction of a 4-pole DC machine is given in the fig 3.1.

All DC machines have mainly two parts:

1. Stator (outer stationary part)
2. Rotor (inner rotating part)

The stator consists of Yoke or Magnetic frame, poles, pole shoe, field winding.

Rotor has the following parts:

- Armature – Armature core, Armature winding
- Commutator – Brushes,
- Bearing, end plates, shafts

3.2.1 Yoke

1. It provides mechanical support to the poles and acts as a protecting cover for the whole machine.
2. It carries the magnetic flux produced by the poles.

3.2.2 Field system

Field system consists of two main parts namely poles and field winding.

i) Poles

Each pole is divided into two parts, namely:

1. Pole core
2. Pole shoe

The functions of pole core and pole shoe are:

1. Pole core carries field winding which is necessary to produce the flux.
2. Pole shoes spread out the flux in the air gap uniformly.
3. It supports the exciting coils (or) field coils.
4. It is made up of cast-iron or cast-steel.

ii) Field winding

The field winding is placed on the pole core. It is made up of aluminium or copper. Its function is to carry the current and produce the magnetic flux. The pole structure of a DC machines is shown in fig 3.1.

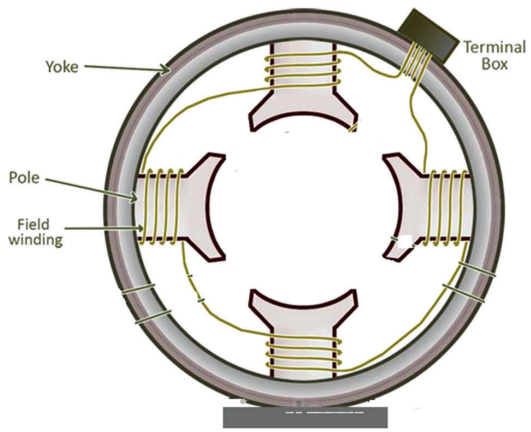

FIG 3.1 Yoke and Poles

3.2.3 Armature system

It is further divided into two parts namely:

1. Armature core
2. Armature winding

i) Armature core

It is cylindrical in shape with slots on its outer periphery and is mounted on the shaft and is used to house the armature conductors in the slot. It is made of cast-steel laminations to reduce the eddy current loss.

ii) Armature slots and windings

The armature windings are placed into the slots on the armature surface. When

the armature rotates, emf is induced in the armature conductors. The ends of the coils are soldered with commutator segments. These segments are made up of copper materials.

3.2.4 Commutator

The emf induced in the armature conductor is alternating in nature. This alternating emf is made into unidirectional by means of a device called as commutator. It is made up of copper segments.

3.2.5 Brushes and bearings

The function of brushes is to collect current from commutator. It is made up of carbon or graphite in the shape of rectangular block. These brushes are housed in brush-holders usually of box-type. Ball bearings are used because it is reliable, but for heavy duty machines, roller bearing is preferred. The structure is shown in fig 3.2

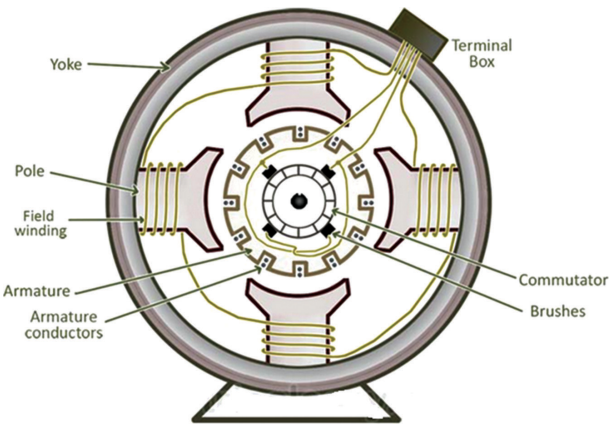

FIG 3.2 Poles and armature of DC machines.

3.3 DC Generator

A DC generator is a rotating machine that supplies an electrical output with unidirectional voltage and current. The basic principle of operation is same as that of synchronous generator.

3.3.1 Principle of operation of a DC Generator

According to Faraday's law of electromagnetic induction, 'when a conductor is rotated in a magnetic field, the magnetic lines of flux lines were bisects and dynamically induced emf is produced can be seen in fig. 3.3. The emf causes a current flow when the circuit is closed. The direction of the current can be known with the help of Fleming's Right-hand rule.

The basic requirements for the dynamically induced emf are:

1. A static magnetic field
2. A conductor or coils
3. Relative motion between the magnetic field and the conductors.

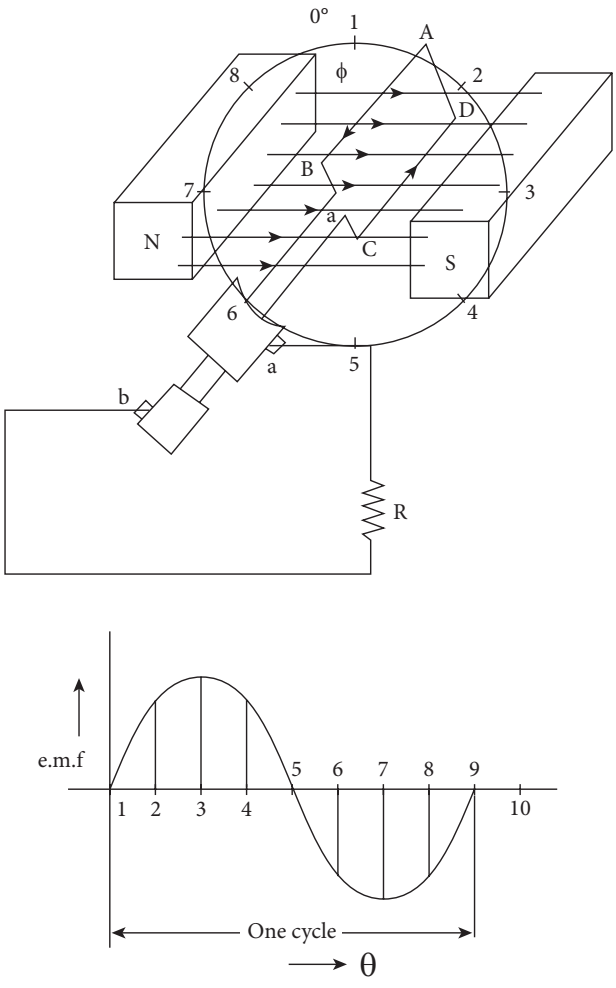

FIG.3.3 Principle of EMF generation

3.3.2 Elementary DC Generator

Consider a single-turn rectangular copper coil ABCD rotating clockwise in a magnetic field provided by N and S magnets (or) electromagnets as shown in fig 3.4. The two ends of the coil are joined to two split-rings 'a' and 'b' which are insulated. Two collecting brushes (of carbon or copper) press against the split-rings. Their function is to collect the current produced in the coil and to carry it to the external load resistance R. The rotating part is called as 'armature' and the magnets as "field magnets" or "poles". The coil is rotated in clockwise direction at a uniform magnetic field.

At position 1, where θ = 0 degrees, the plane of the coil is perpendicular to the direction of lines of the flux. Now, the flux linked with the coil is maximum, but the rate of change of flux is minimum. So, no emf is induced in the coil. At the starting position the emf induced is zero.

When the coil is rotated further, the rate of change of flux linkage increases up to position 3, where θ = 90 degrees. At this position, the plane of the coil is parallel to the lines of flux. Now, the flux linked with the coil is minimum, but rate of change of flux linkage is maximum. Therefore, at this position emf induced in the coil is maximum. On further rotation the value of generated emf continues to decrease from maximum to minimum value.

At position 5, where θ = 180 degree, the generated emf is reduced to zero. The magnitude of emf with respect to the coil position is represented in fig 3.3. from position 5 to position 7 (180 degrees to 270 degrees), the induced emf value starts again from zero to maximum and from position 7 to positon1 (from 270 degrees to 360 degrees) maximum to zero in opposite direction.

In this way the generated emf goes on one cycle as alternating emf. The two halved split-rings make the bidirectional emf into unidirectional emf to behave as DC generator. This set up is shown in fig 3.4. In the first half revolution current flows along the path A-B-a-M-L-b-C-D-A, (fig 3.4a). The coil in the second half

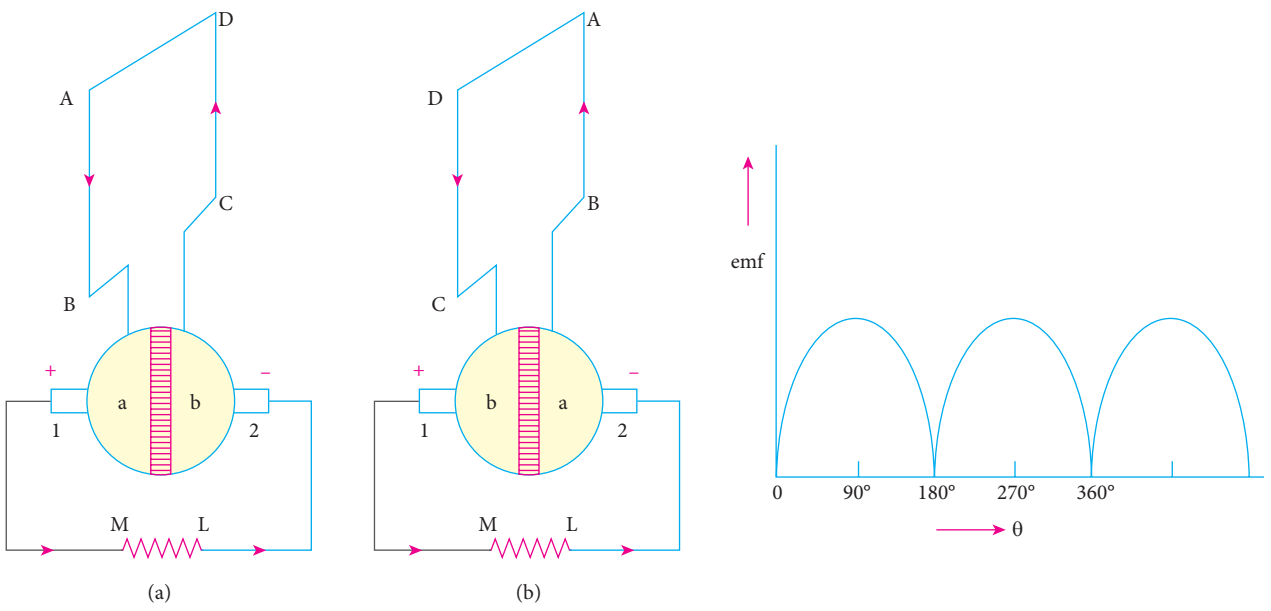

FIG.3.4 AC into DC waveform

rotation, the induced currents is reversed. But the positions of brushes 'a and b' are also reversed so that current through the load remains the same direction, that is the loop D-C-b-M-L-a-B-A-D (fig 3.4b). The device making the alternating supply into unidirectional supply is by means of a device called 'commutator'.

3.3.3 EMF equation of DC generators

Let Ø = flux in weber

Z = no. of armature conductors

N = speed in RPM

P = no. of poles

A = no. of parallel paths

(A=P) - for lap winding

(A=2) - for wave winding

According to Faraday's law of electromagnetic induction, the value of generated EMF,

$$\text{EMF, } E_g = \frac{d\text{Ø}}{dt}$$

Flux cut/conductor in one revolution for 'P' poles 'dØ' = ØP

The time for one revolution 'dt'=$\frac{60}{N}$.

The value of induced EMF per coductor, E_g

$$= \frac{d\text{Ø}}{dt} = \frac{\text{Ø}P}{\frac{60}{N}} = \frac{\text{Ø}PN}{60}$$

For Z = Number of conductors
A = Parallel path
P = No of poles

$$E_g = \frac{\theta ZN}{60} X \frac{P}{A} \text{ volts}$$

3.3.4 Types of DC Generator

DC generators are classified according to the manner in which field windings are connected. The process of giving DC voltage to the field winding for producing magnetic field is called field excitation. The generators are classified based on the excitation, as:

1. Separately excited DC generator

   In separately excited DC generator, the excitation to the field winding is given by an external DC supply as shown in Fig 3.5

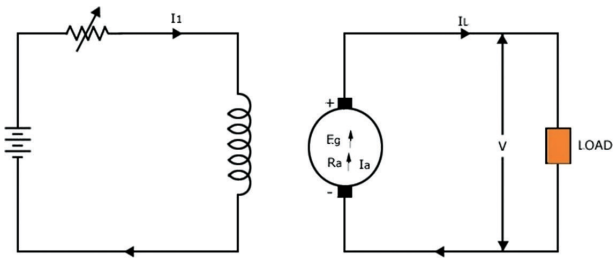

FIG 3.5 Separately excited DC generator

2. Self-excited DC generator

   In this type of DC generators, the generation of emf is due to its property of residual flux or residual magnetism present in the field winding. They are mainly of three types:

   a) DC series generator

   b) DC shunt generator

   c) DC compound generator

a) DC series generator

In DC series generators the field winding (R_{se}) is connected in series with the armature winding (R_a). Therefore, the series current (I_{se}) is equal to the armature current (I_a) and the load current (l_L), as shown in the fig 3.6

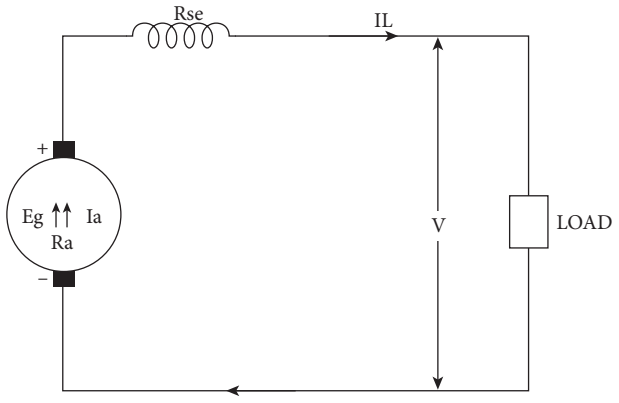

FIG 3.6 DC Series generator

The current equation is $I_a = I_L = I_{se}$

The Voltage equation is $E_g = V + I_a (R_a + R_{se})$

V = Load voltage

b) DC shunt generator

In shunt generator the field winding is across (shunt) the armature winding. Here the armature current (I_a) is the sum of shunt field current (I_{sh}) and load current (I_L) as shown in Fig 3.7

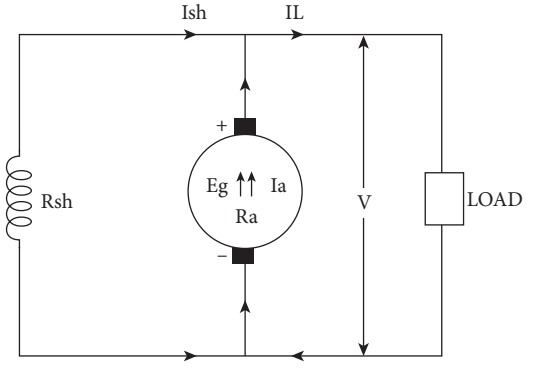

FIG 3.7 DC Shunt generator

The current equation is $I_a = I_L + I_{sh}$

The voltage equation is $E_g = V + I_a R_a$

c) DC compound generator

These types of generators are again classified into long shunt generator and short shunt generator based on the field winding connections. In long shunt compound generator, the shunt field winding is connected in parallel with the series combination of series field winding and armature winding. (fig 3.8a)

In short shunt compound generator, the series field winding is connected in series with the parallel combination of armature and shunt field winding. (Fig 3.8b)

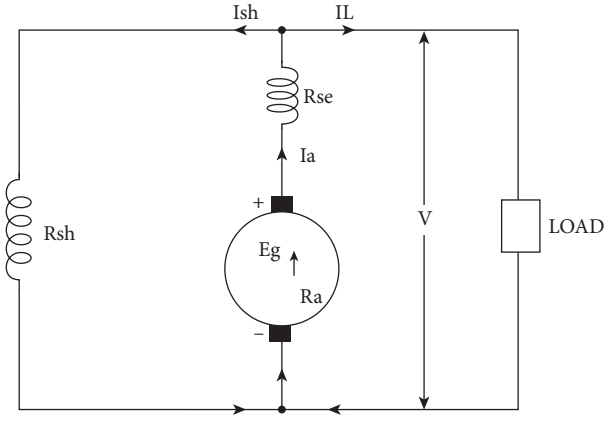

FIG 3.8 (a) DC Long shunt

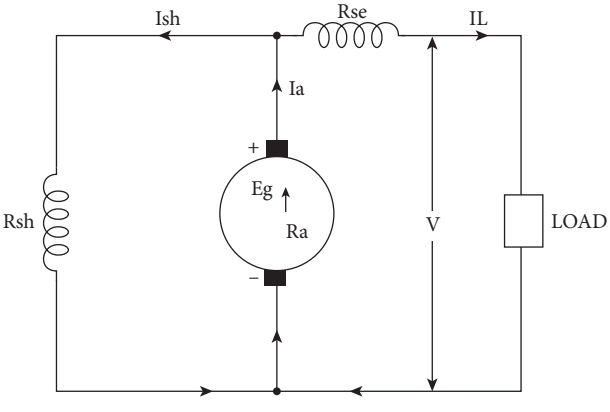

FIG 3.8 (b) Short shunt compound generator

Where,

I_a = Armature current

R_a = Armature resistance

I_L = Load current

I_{sh} = Shunt field current

I_{sc} = Series field current

R_{se} = Series field resistance

R_{sh} = Shunt field resistance

V_L = Load voltage

E_g = Generated voltage from armature.

DO YOU KNOW?

Universal motors are known to over-speed, perhaps dangerously and destructively, when run with no load. This article deals with different methods of universal electric motor speed control.

A motor which can be operated either on DC or on single phase AC is called a universal motor. On both AC and DC, it gives approximately the same speed and output. Universal motors often run at dangerously high speed when operated at no load. This means that motor speed will be low at full load, but the speed of the motor will start increasing as the load on the motor decreases. Finally at no load, the motor will run at very high speed (perhaps about 20,000 rpm in some cases) and cannot make to run at less than about 2,000 rpm. The speed of universal motor varies just like that of a DC series motor. Being a series wound motor, it has a high starting torque and variable speed characteristics, and if the motor is started at no load, due to its high starting torque it will attain high speed quickly. Thus it is not advisable to start a universal motor at no load.



3.3.5 Applications of DC generator

1. DC series generators
   - i) They are used for series arc lighting
   - ii) They are used as boosters for the purpose of compensating the drop in voltage in the lines on loading.
   - iii) Used for regenerative braking of DC locomotives.
2. DC shunt generators
   - i) In shunt generator, terminal voltage is more or less constant. So these are used for supplying loads needing constant voltage.
   - ii) In Electroplating
   - iii) In Battery charging purpose.
   - iv) As Exciters for AC generators.
3. DC compound generators
   - i) By means of compound generator it is possible to give constant voltage at the line end by proper compounding.
   - ii) Differentially, compound generator may be used for welding purpose.
   - iii) They are used to supply power to railway circuits, elevator motors etc.
4. Separately Excited Generators

   These generators are used for:
   - i) Supplying DC motors whose speed is to be varied widely.
   - ii) Where a wide range of DC voltage is required for testing purpose.

3.4 DC Motor

3.4.1 Principle of operation of DC motor

An electric motor is a machine which converts electrical energy into mechanical energy. Its action is based on the principle that when a current-carrying conductor is placed in a magnetic field, the conductor experiences a mechanical force. The direction of this force is given by Fleming's left-hand rule and magnitude is given by;

F = BIl (N)

B = flux density due to the flux produced by the field winding

I= Magnitude of current passing through the conductor

l = Active length of the conductor

In construction, there is no difference between DC generator and DC motor. In fact, the DC machine can be interchanged as a generator or as a motor. In generator the input is mechanical energy by a prime mover and the output is voltage, while in a DC motor the input is electrical energy and it produces rotating torque as output.

3.4.2 Fleming's left hand rule

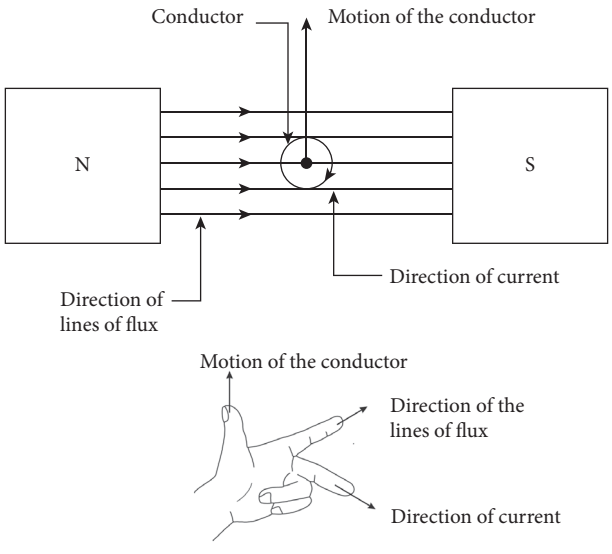

FIG 3.9 Fleming's left hand rule

According to Fleming's left hand rule, keep the forefinger, middle finger and thumb of the left hand perpendicular to one another as in fig.3.9. The forefinger indicates the direction of the magnetic field (B), the middle finger indicates the direction of current (I) in the conductor, and the thumb indicates to the direction of motion (F) of the conductor.

3.4.3 Principle of operation of DC motor

In principle and design, a DC motor is the reverse process of DC generator.

Consider a single conductor placed in a magnetic field as shown in fig 3.10. The two diagrams indicate the direction of magnetic fluxes considering separately. The resultant force takes place in a DC motor is clearly shown in the fig 3.10

A steady current is passed through the armature coil from the commutator and the brushes are arranged so that reverse the current for every half revolution. When a coil, carrying a current is placed in a magnetic field, it experiences forces, as per Fleming's left-hand rule, which turn to a direction perpendicular to the field and the current.

The fig 3.11 (a) shows the upper side of the conductor, the magnetizing forces of the field due to the current is

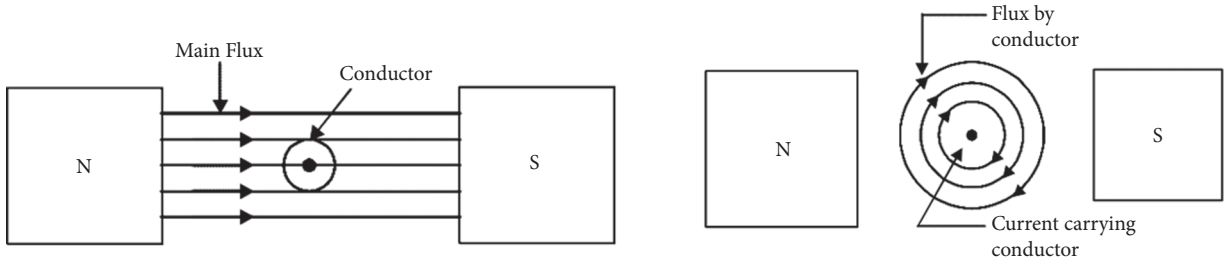

FIG 3.10 Resultant force developed

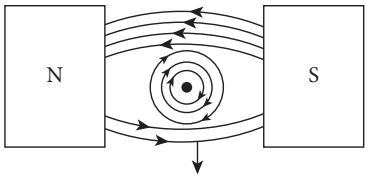

FIG 3.11 (a)

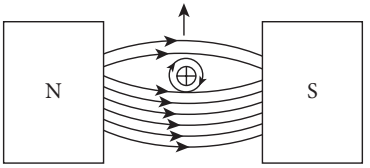

FIG 3.11 (b)

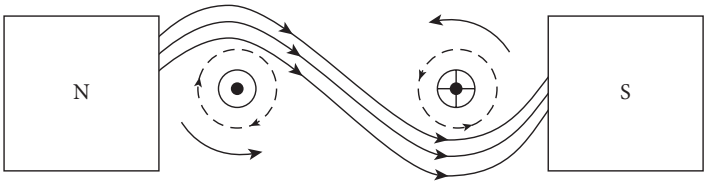

FIG 3.11 (c)

FIG 3.11 Torque development in DC Motors

progressive while on the lower side it is retrogressive. The result is to increase the flux density into the region directly above the conductor and to reduce flux density below the conductor.

If the current is reversed in the conductor, the strengthening of flux lines occur below the conductor and the conductor will be pushed upwards as shown in fig. 3.11(b).

As above, one of the coil side 'A' will be forced to move downward and 'B' moves upward. These two forces are equal in magnitude and opposite to each other as in fig. 3.11(c). These forces make the armature to rotate through the two ends by the help of bearings. But practically, a DC machine will have multiple conductors and each conductor will be experiencing a force F=BIL Newton. These forces collectively produce a driving torque which sets the armature rotating. The machine is then said to be motoring.

3.4.4 Back EMF of DC Motor (E_b)

When the armature of a DC motor rotates in the magnetic field, the armature conductor cuts the magnetic flux. Hence an emf will be induced in the conductor. According to Faraday's law of electromagnetic induction, the induced emf acts in opposite direction to the applied voltage and it is referred as the back emf E_b.

The back EMF is given by,

$$E_b = \frac{\phi ZN}{60} \times \frac{P}{A} \text{ volts}$$

which is same as that emf induced in a DC generator.

The relationship between the current, back emf and the applied voltage for a dc shunt motor is given by,

$$E_b = V - I_a R_a$$

Where,

E_b = back emf in volts

V = supply voltage in volts

I_a = armature current in amperes

R_a=armature resistance in ohms.

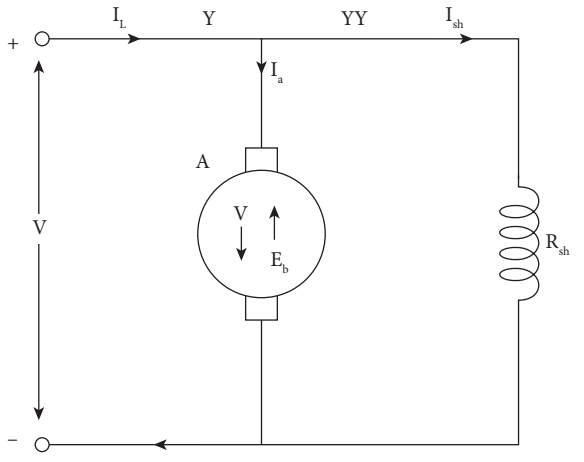

FIG 3.12 DC motor circuit

The back emf E_b is always less than that of the applied voltage and hence the current is flowing against the direction of back emf.

3.4.5 Types of DC motors

The DC motor is classified into three types based on the field winding connection with the armature.

i) DC series motor

ii) DC shunt motor

iii) DC compound motor

a) Long shunt compound motor

b) Short shunt compound motor

i) DC series motor

In DC series motor, the field winding is connected in series with the armature as shown in Fig 3.13 The series field winding carries the input current, $I_L = I_a = I_{se}$. The series field winding is relatively small in number to give minimum value of resistance drop.

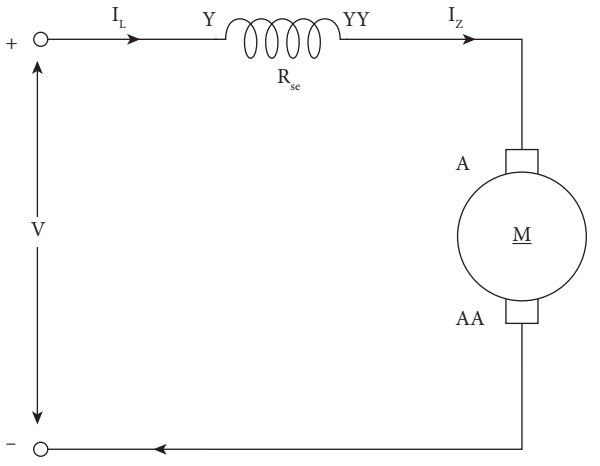

FIG 3.13 DC series motor

ii) DC shunt motor

In DC shunt motor, the field winding is connected parallel (shunt) with the armature as shown in fig 3.14. The field winding has a large number of turns and relatively smaller in cross sectional area. Therefore, the shunt field winding has high resistance and hence shunt field current is relatively small compared with armature current. The speed of DC shunt motor is almost constant during no-load to full-load.

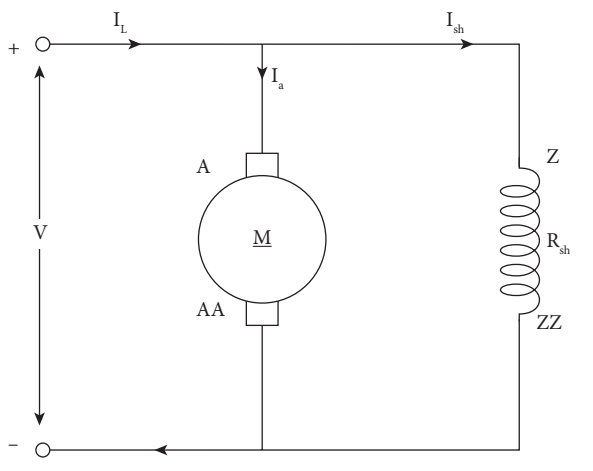

FIG 3.14 DC shunt motor

iii) DC compound motor

In compound motors both series and shunt windings are connected as of long shunt and short shunt compound motor.

a) Short shunt compound motor

In short shunt compound motor, the series field winding is connected in series with the parallel combination of armature and shunt field winding. The connection diagram for this compound motor is as shown in Fig 3.15.

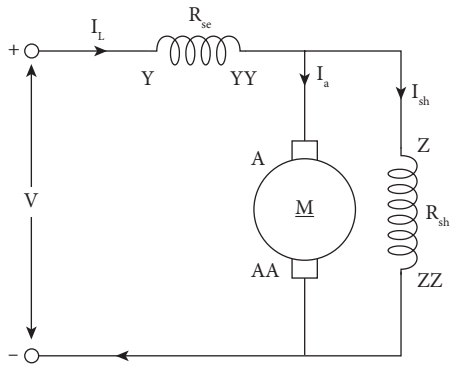

FIG 3.15 DC short shunt compound motor

b) Long shunt compound motor

In long shunt compound motor, the shunt field winding is connected in parallel with the series combination of series field winding and armature winding as shown in fig. 3.16.

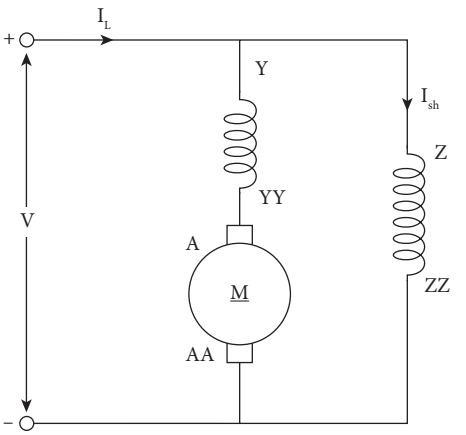

FIG 3.16 DC Long shunt compound motor

3.4.6 Applications of DC motors

Type of motor	Characteristics	Applications
1. DC series motor	i) Variable speed ii) Speed can be controlled iii) No load condition is dangerous iv) High starting torque	i) Electric traction ii) Cranes hoists iii) Conveyors, Elevators, Trolleys
2. DC shunt motor	i) Speed is fairly constant ii) Adjustable speed iii) Medium starting torque	i) Lathe machines ii) Blowers and fans iii) Centrifugal pumps iv) Reciprocating pumps v) Machine tools vi) Drilling machines
3. DC compound motor	i) Variable speed ii) Speed can be controlled iii) High starting torque	i) Punches ii) Elevators iii) Shears iv) Rolling mills v) Printing presses vi) Air compressors

3.5 Conclusion

- In this unit, the knowledge about the various parts, its principle of operation and the applications of DC machines were known with updated contents.

Activities



1. With the help of DC supply, run DC motor and know the speed.

Glossary



Generator	மின்னாக்கி
Motor	மின்னோடி
Magnetic poles	காந்த துருவங்கள்
Carbon brush	கார்பன் தூரிகை
Bearings	தாங்கிகள்

Evaluation





PART 1 **(1 Mark)**

Choose the correct answer

1. In DC generator, the alternating emf is converted into direct by means of ----------
   a) Slip-ring
   b) Commutator
   c) Carbon brush
   d) End rings
2. The ---------- rule gives the direction of induced emf in DC generator.
   a) Fleming's left-hand rule
   b) Fleming's Right-hand rule
   c) Faraday's law
   d) Kirchhoff's law
3. The Yoke of a DC machine is made up of
   a) Copper b) Aluminium
   c) Zinc d) Cast-iron
4. Which of the following is a function of brushes?
   a) To convert AC to DC
   b) To convert DC to AC
   c) To collect the current and to deliver to load
   d) To regulate the speed
5. The armature is made up of
   a) Solid aluminium
   b) Solid steel
   c) Laminated aluminium
   d) Laminated steel

6. The principle of a DC motor is based on
   a) Fleming's left-hand rule
   b) Fleming's Right-hand rule
   c) Faraday's law
   d) Ohm's law
7. For electric traction, the motor used is ----------
   a) DC shunt motor
   b) DC series motor
   c) DC compound motor
   d) Stepper motor
8. Which of the following motor is constant speed motor?
   a) DC shunt motor
   b) DC series motor
   c) AC series motor
   d) Transformer
9. DC compound motor is having .....
   a) series winding
   b) shunt winding
   c) series or shunt winding
   d) series and shunt winding
10. Commutator is made up of ----------
   a) Copper b) Brass
   c) Aluminium d) Silver

PART B (3 Mark)

Answer the questions in briefly

1. What are the main parts of DC machines?
2. Write some short notes on commutator.
3. Define yoke?
4. What are the types of DC generators?
5. State Fleming's left-hand rule.
6. State the applications of DC series motor.
7. Mention the applications of DC shunt motor.

PART C (5 Mark)

Answer the questions not exceeding one page

1. Derive the emf equation of a DC generator.
2. Draw the circuit diagram of DC shunt and series generators.
3. Draw the circuit diagram of DC shunt and series motors.
4. Write down the various applications of DC generator.
5. List out the applications of DC motor.

PART D (10 Mark)

Answer the questions not exceeding two page

1. With neat diagram explain the construction of DC machines.
2. Explain the principle of operation of DC motor.
3. Explain the different types of DC generators with neat diagram.



Reference Book

1. 'A text book of Electrical Technology' VolumeII B.L. Theraja and A.K. Theraja, S. Chand & Company Ltd.



Reference Internet Source

http://www.globalspec.com



UNIT 04

AC machines

WS4ZL

LEARNING OBJECTIVE

This unit enable the students to know about basic principle, construction, operation of single phase and three phase AC motor.

TABLE OF CONTENTS

4.1 Introduction
4.2 AC Generator (Alternator)
4.3 AC Motor - Single phase motor
4.4 AC Motor – Three phase motor
4.5 Stepper motor
4.6 Conclusion

4.1 Introduction

The machine which generates alternating current is called as alternator or synchronous generator.

4.2 AC Generator (Alternator)

In power supply system alternating current is supplied to a great extent to direct current supplies because of the following reasons.

1. AC power can be generated in large quantity without difficulty.
2. AC is cheap in cost.
3. AC voltage can be step up or step down by using transformer.
4. AC can be easily converted into DC.

4.2.1 Requirement of Alternator

The generation of AC emf of the alternator requires the following basic systems:

1. Magnetic field system to produce the magnetic field.
2. Armature system which house the conductor on which emf is induced.
3. A prime mover is required which gives rotational power for generation of emf in the alternator.

4.2.2 Parts of motor

1. **Frame:**

   It is made up of cast iron alloy which gives shape to the machine.

2. **Stator and rotor core:**

   It is built from high quality of laminated silicon steel to reduce losses.

3. **Stator and rotor windings:**

   Stator and rotor windings have moisture proof insulation embodying mica and varnishes. For most effective air circulation, it is uniformly spaced.

4. **Air gap:**

   It is designed for the air gap to retain uniform space in the stator.

5. **Shafts and bearings:**

   The motor shaft is fixed in the rotor. Rotor shaft holds the bearings on either end of the motor casing. Ball and roller bearings are used in the shaft for free rotation to avoid friction.

6. **Fans:**

   Light aluminum fans are used for the circulation of air to reduce heat.

   Generally single phase motors are used for domestic purposes. The motors less than 1 HP (1HP = 746 watts) are called as Fractional Horse Power motors (FHP).

Advantages

i) Simple in construction

ii) Cheaper in cost

iii) Reliable

iv) Repairs and maintenance is very easy.

4.2.3 Types of Alternator

According to the position of armature and field, the alternators are classified into two types

a) Stationary field and rotating armature type.

b) Stationary armature and rotating field type.

a) Stationary field and rotating armature type

It is commonly used in small size generators in low voltages. The DC supply given to the field windings and the alternating current generated is delivered to the slip ring. The mechanical construction of the revolving armature alternator is similar to that of the DC generator except that there is no commutator.

b) Stationary armature and rotating field type

Alternator with the stationary armature and revolving field type is used in the generation of high voltages. In this rotating armature type, it difficult to get generated voltage by using sliding contact brushes on slip rings at high voltages. But in stationary armature, the power from the generator is delivered through copper by connecting firmly. The rotating fields are supplied to DC to a uniform voltage of 110V, can be through a pair of slip rings.

Advantages

1. The armature windings are fixed in the stator. So it can be easily insulated, .
2. Output current can be easily collected and supplied to the load.

3. Rotating field system has two slip rings which are insulated.
4. Rotating field is light in weight and run at high speed.
5. In stationary armature the winding may be cooled easily.

On basis of its construction, Alternators are classified in to two types.

1. Salient pole alternator
2. Non – salient pole alternator (Cylindrical)

4.2.4 Salient pole alternator

(a) Stator

It is the stationary part of the machine and it is built up of silicon steel laminations having slots on its inner periphery to house the armature conductors. The armature core in the form of a ring is fitted to a frame which may be of cast iron or welded steel frame which is called stator frame.

The armature core is laminated to reduce the eddy current loss. The laminations are stamped out and insulated from each other with paper or varnish. The stampings also have holes which make axial and radial ventilating ducts to provide efficient cooling.

(b) Armature Slot

Slots provided on the stator core are mainly of three types.

1. Wide open slots
2. Semi-closed slots
3. Closed slots

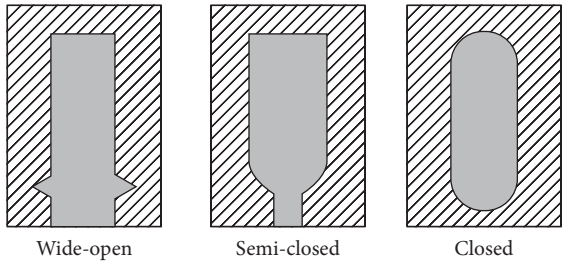

FIG 4.1 Types of slots

1. **Wide open slots**

   The open slots are more commonly used because the coils can be form wound and pre – insulated before placing in the slots. This type of slots also facilitates easy removal and replacement of defective coils. But this type of slots creates uneven distribution of flux, there by producing ripples in the emf. This type of slots are used in alternator.

2. **Semi-closed slots**

   In semi closed type, the slots the wounded coils are inserted gradually which are quiet requires time to process the winding.

3. **Closed slots**

   These closed slots not disturb the flux lines in air gap. It is rarely used.

(c) Rotor

Salient pole type rotor is used in low and medium speed alternators. It has a large number of projecting poles, having their cores bolted on to a heavy magnetic wheel made of cast iron or steel. The diameter of this alternator is large and the length is small. The poles and pole shoes are laminated so as to reduce the heat due to eddy currents. In large machines, the field winding consists of rectangular copper strip wound on edge.

4.2.5 Turbo alternator

The alternator which coupled directly to the steam turbines are called **turbo-alternator**. The turbine converts heat energy in the steam into mechanical work and the alternator converts mechanical energy into electrical energy .The bulk power is generated by three phase turbo alternators at frequency 50 Hz. Turbo alternators are cylindrical pole machines having synchronous speeds 3000 rpm (two pole machines) or 1500 rpm (for four pole machines).

Large centrifugal force produced at these speeds, restricts the diameter of the turbo alternators and is characterized by small diameters compared to their length. The generated voltage is either 6.6 KV or KVA separated DC generator is mounted on the same shaft of the turbine and alternator and supplies the exciting current for the field winding of alternator. Air cooling is used up to a capacity of 100 MW generating units. Hydrogen cooling can be used for 500 MW generating unit.

(i) Stator

The diameter of non salient pole alternator stator is small and the length is long. Stator is the stationary part of the machine, and it is built up of laminated silicon steel having slots on its inner periphery to house the conductors. Normally this type of alternator has double layer winding. But in high voltage machines, single layer winding is used in semi-closed slot. Lengthy ventilating ducts are provided for cooling purpose.

(ii) Smooth cylindrical type rotor

This rotor is used in very high speed alternators driven by steam turbines. The rotor of turbo alternator physically is in the form of smooth cylinder, having long axial length and smaller diameter as in fig 4.2.

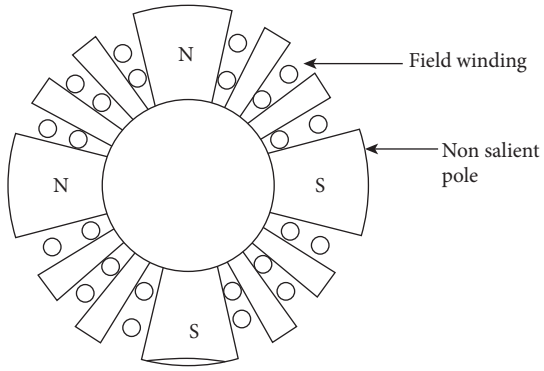

FIG 4.2 Cylindrical pole rotor

Poles are not projected out from the surface of the rotor. The outer periphery of the rotor stampings has radial slots.The field windings are accommodated in these slots. Generally copper strips are used for the field winding, Radial ducts are provided for ventilation purposes.

4.2.6 Applications of alternators

1. Automotive alternators are used in modern automobiles.
2. Diesel-electric locomotive alternators are used in diesel-electric multiple units.
3. Marine alternators are used in marine applications.

4.2.7 Comparison of Salient pole type rotor and Smooth cylindrical type rotor

No	Salient pole rotor	Cylindrical rotor
1	The diameter of rotor is large	The diameter of rotor is small
2	Poles are projecting outside	Poles are not projecting outside
3	Length of rotor is short	Length of rotor is long

4	Damper winding is required	No damper winding is required
5	Runs at slow speed. (100 rpm to 1500 rpm)	Runs at very high speed. (1500 rpm to 3000 rpm)
6	Suitable for hydro generators	Suitable for turbo alternators run by steam turbines

4.2.8 Principle of operation of alternators

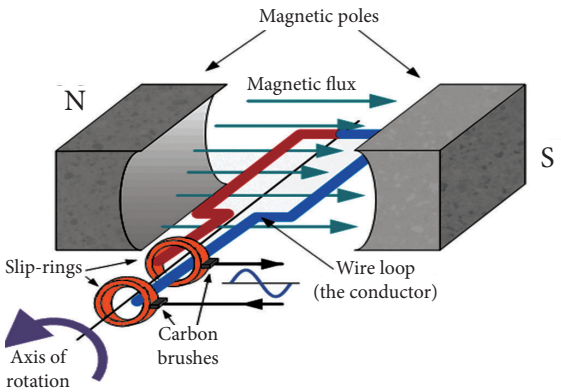

FIG 4.3 Basic principle of Alternator

An alternator works on the principle of electromagnetic induction like DC Generator. When the flux linked to a conductor, an emf is induced in the conductor. Alternator consists of armature and field winding as in fig 4.3.

The frequency of output AC voltage of a synchronous generator is directly proportional to the rotor speed. To maintain constant frequency, the rotor must always move at synchronous speed.

4.2.9 EMF equation of an alternator

EMF Equation of Alternator

Let,

P = Number of poles

φ = Flux per pole in Weber

N = Rotor speed in RPM

f = Frequency of the induced EMF in Hz

Z = Number of conductors in series per phase

T = Number of coils or turns per phase

As the flux per pole is φ, hence, in one revolution, each stator conductor cut a flux of,

$$d\varphi = P\varphi$$

And the time taken to complete one revolution is,

$$dt = \frac{60}{N}$$

Therefore, according to electromagnetic induction, the average EMF induced in one stator conductor is given by,

$$\text{EMF per conductor} = \frac{d\phi}{dt} = \frac{P\phi N}{60}$$

Since there are Z conductors in series per phase, thus,

$$\text{EMF per phase} = \text{EMF per conductor} \times Z = \left(\frac{P\phi N}{60}\right) \times Z$$

Speed of the rotor N =120f / P

$$\therefore \text{EMF per phase} = \left(\frac{P\phi Z}{60}\right) \times \frac{120f}{p} = 2 f \varphi Z$$

4.3 AC motors – Single phase motor

4.3.1 AC Single phase motor

A single phase motor with coil is the simplest type of AC motor. AC single phase induction motor is not a self starting.

Single phase induction motor has distributed stator winding and squirrel cage rotor. When single phase supply is feeded, the stator winding produces a flux which is only alternating. It is not a synchronously revolving (or) rotating flux as in the case of a two or three phase stator winding fed from a two or three phase supply. Now, alternating or pulsating flux acting on a stationary squirrel cage rotor cannot rotate (only a revolving flux can produce rotation).

To make itself starting, it can be temporarily converted into a two phase induction motor while starting. This can be achieved by introducing an additional starting winding called auxiliary winding.

i) Stator winding

Stator of a single-phase Induction motor has two windings

1. Main winding (Running winding)
2. Starting winding (Auxiliary winding)

These two windings are connected in parallel across a single phase supply to an angle of 90° electrical degrees, phase difference of 90° electrical degree can be achieved by connecting capacitor in series with the starting winding. Hence it functions like a two phase motor and the stator produces revolving magnetic field which causes rotor to run. Once motor speed, reaches to 80% of its normal speed, the starting winding gets disconnected from the circuit by means of a centrifugal switch and the motor runs only with main winding.

ii) Rotor

It consists of a laminated cylindrical core having parallel slots on its outer periphery. One copper or aluminum bar is placed in each slot. All these bars are joined at each end by metal ring called end rings. The entire construction resembles like a squirrel cage motor. The rotor is not electrically connected to the supply. The rotor functions with the current induced by the transformer.

4.3.2 Classification of Single phase motor

a) Split phase induction motor

b) Capacitor start capacitor run motor

c) Universal motor

a) Split phase induction motor

The starting torque of this type of motor is relatively small and starting current is high. These motors are commonly used for rating up to 0.5 HP where the load could be started easily.

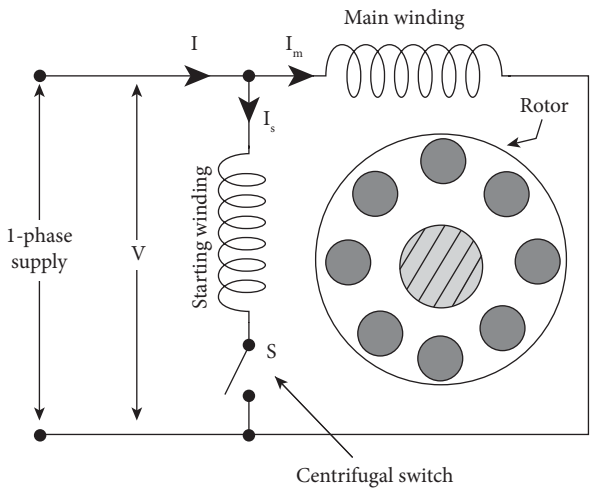

FIG 4.4 Split phase induction motor

i) Construction

The schematic diagram of the split phase induction motor is shown in figure 4.4. The starting winding is designed to have a high resistance and low reactance than the main winding. The main winding is having high inductance when surrounded

by more iron which could be made by placing it deeper into the stator slots.

ii) Working principle

The starting current I_s will lag the main supply voltage V_L by 15° and the main winding current I_m lags the main supply voltage by 80°. Therefore, these current will differ in time phase and their magnetic field will combine to produce a rotating magnetic field. When the motor has reached to about 80% of synchronous speed the starting winding is opened by a centrifugal switch and the motor will continue to operate as a single phase motor. At the point the starting winding is disconnected, the motor develops nearly as much torque with the main winding alone as with both windings connected.

iii) Changing the direction of rotation

The direction of rotation of a split phase motor is determined by the way the main winding and auxiliary windings are connected. By changing the main winding or starting winding terminals, the direction of rotation can be reversed.

iv) Applications

The motors used for easy starting loads to a range of 1/3 HP or less in

1. Washing machines
2. Fans
3. Grinders
4. Carpentary tools

b) Capacitor start Capacitor run motor

A Capacitor start capacitor run motor is similar to that of a single phase Induction motor that employs a capacitor in the auxiliary winding to produce a greater phase difference between the current in the main and the auxiliary windings.

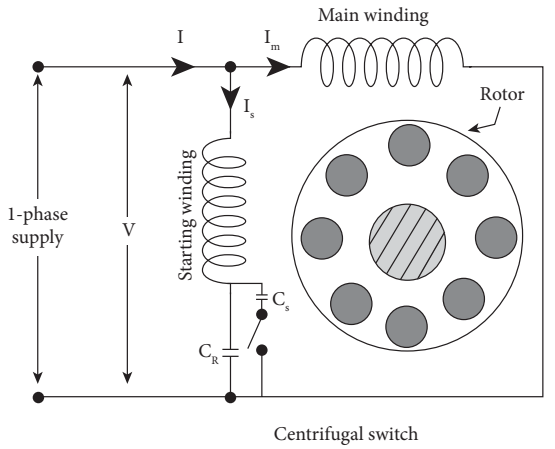

FIG 4.5 Capacitor start-Capacitor run motor

i) Working principle

Capacitor start capacitor run motor starts with a capacitor in series with the starting winding, which produce high starting torque. When a motor is in run, capacitor also run in supply and the running and starting windings remains in the circuit. In start, the centrifugal switch gets closed when two capacitors are in parallel. When a motor reached to a speed 80% of full load speed, the centrifugal switch opens and running capacitor remains in the circuit. It is used to disconnect the starting capacitor from the supply after attaining 80% of load speed. The direction of the rotation can be changed by changing either the main or starting winding terminals.

ii) Applications

The capacitor start capacitor run motors are used for low noise and high starting torque applications like,

1. Compressors
2. Pumps
3. Air Conditioners
4. Refrigerators.

c) Universal motor

The universal motor is defined as a motor which can be operated on both DC and AC supply with the same speed and output.

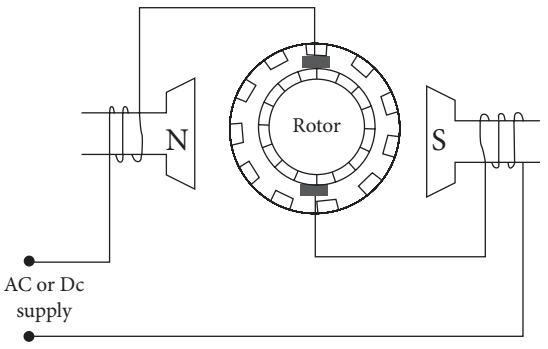

FIG 4.6 Universal motor

i) Construction

Basically universal motor is similar to DC series motor. The universal motor is usually of two poles with a winding of few turns which gives opposite magnetic polarity. The armature is of wounded type and it consists of laminated cores having either straight (or) skewed slots. The armature windings are connected to a commutator.

ii) Working principle

Universal motor develop unidirectional torque, operates on both DC and AC supply. Universal motor works on the principle of DC motor, (i.e. force between the main pole flux and the current carrying armature conductors).

In AC operation, both field and armature currents change their polarities, at the same time resulting in unidirectional torque.

iii) Application

Universal motor is used in

1. Vacuum cleaners
2. Mixer
3. Portable drills and
4. Domestic sewing machines

4.3.3 Comparison of various types of single phase motors

S.No	Types of motor	Starting torque	Speed	Windings	Applications
1	Split – phase motor	Low	Low	Main winding, Starting winding	Driving fans, wood working tools
2	Capacitor start capacitor run motor	High	Constant	Main winding, Starting winding	Compressors, refrigerators, air -Conditioners
3	Universal motor	Very high	Varies according to load	Field winding, armature winding	Vacuum cleaners, mixie, portable drills, sewing machine

4.4 AC motor - three phase motors

Three phase induction motors are widely used in industries and domestic motors. The rotor of induction motor gets power from the stator by means of induction from transformer. In this, primary winding is stationary and secondary winding is rotating one.

Based on construction, three phase induction motors are classified as

i) 3-phase squirrel cage induction motor

ii) 3-phase slip-ring induction motor

4.4.1 Construction of 3 phase induction motor

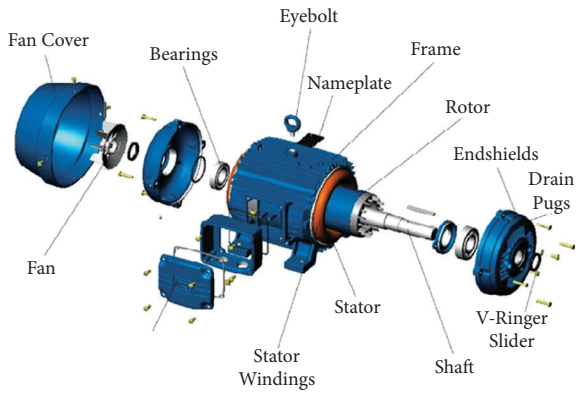

FIG 4.7 Parts of 3 phase induction motor

i) Stator

The stator is made up of number of stamping, with alternate slot and tooth. Stampings are insulated from each other. More number of stampings are combined together to build the stator core. The stator core is fitted in a casted or fabricated steel frame. The slots in the stator, houses the three phase winding and produce the required rotating magnetic field.

ii) Rotor

Two types of rotor used in Induction motors are:

a. Squirrel cage rotor

b. Slip ring (or) Wound rotor

a) Squirrel cage rotor

The rotor is made up of a cylindrical laminated core with slots to carry the rotor conductors. The rotor conductors are heavy bars made of copper or aluminum, short circuited in both ends called end rings. The value of rotor resistance is low. From the rotor side no supply is given or taken. Motors having such type of rotors are extremely rugged in construction. The majority of induction motors are cage rotors.

i) Advantages

1. Cheap in price
2. Light in weight
3. Rugged construction
4. Higher efficiency
5. Requires less maintenance

ii) Disadvantages

1. Moderate starting torque
2. Starting torque cannot be controlled

iii) Applications

1. Lathes
2. Drilling machines
3. Fans
4. Blowers
5. Water pumps
6. Grinders and
7. Printing machines

b) Slip ring (or) Wound rotor

In Slip ring (or) Wound rotor type, the construction, rotor winding is exactly similar to the stator. The rotor carries a three phase star or delta connected, distributed winding, wound for same number of poles as that of stator. The rotor construction is laminated and slotted. The slots contain the rotor winding. The three ends of three phase winding, available after connecting the winding in star or delta, are permanently connected to the slip rings. The slip rings are mounted on the same shaft. We have seen that slip rings are used to connect external stationary circuit to the internal rotating circuit. So in this type, the external resistances can be added with the help of brushes and slip ring arrangement, in series with each phase of the rotor winding.

i) Advantages

1. The starting torque can be controlled by varying the rotor circuit resistance.
2. The speed of the motor can also be controlled by varying the rotor circuit resistance.

ii) Disadvantages

1. Slip-ring type motor is heavy.
2. Higher in cost
3. High rotor inertia
4. High speed limitation
5. Maintenance problems due to brushes and slip – rings

iii) Applications

These motors are used when speed control and high starting torque is required. Mainly used in:

1. Lifts
2. Hoists
3. Cranes
4. Compressors

4.4.2 Slip

The difference between synchronous speed and rotor speed is called the slip speed. It is usually expressed as a percentage of synchronous speed (N_s) and represented by the symbol 'S'.

Slip speed= $N_s - N$

Slip S =

% Slip = $\times 100$

4.4.3 Synchronous motor

A motor which is running in its synchronous speed is called as synchronous motors.

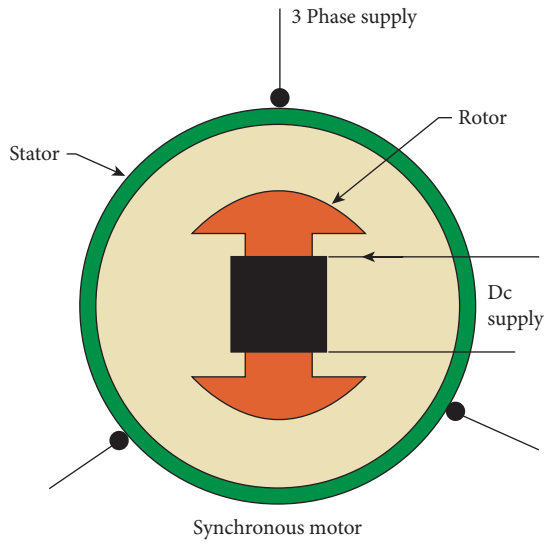

FIG 4.8 Stator and Rotor Synchronous Motor

1. For a given frequency, the synchronous motor runs at a constant average speed, whatever the load.
2. Synchronous motor can be operated over a wide range of power factors, both lagging and leading.

3. The synchronous motor is not a self-starting motor.
4. The changes in applied voltage do not affect synchronous motor torque.
5. For synchronous motor, DC excitation is required.
6. Synchronous motors are usually more costly and complicated

i) Applications of synchronous motor

1. Power factor correction
2. Constant speed, constant load drives
3. Constant voltage

4.4.4 Principle of operation of 3 phase induction motor

In 3 phase induction motor, three phase supply is given to the stator winding. The current flows through the stator winding produces a rotating magnetic field in the space between stator and rotor. This magnetic field rotates at synchronous speed given by

$$N_s = \frac{120f}{N}$$

Whereas, N_s = Synchronous speed

f = Supply frequency

P = Number of poles in which stator is wounded.

The rotating magnetic field cuts the rotor conductors and an emf is induced in the rotor. This induced emf produces current and this current produces magnetic field in the rotor and rotates. Both the stator and rotor fields develop a torque. Now the rotor is rotating in the same direction produces rotating magnetic field. In an induction motor, the rotor speed is always less than the synchronous speed.



Electric motors are used to "actuate" something in your robot: its wheels, legs, tracks, arms, fingers, sensor turrets, or weapon systems. There are literally dozens of types of electric motors (and many more if you count gasoline and other fuelled engines), but for amateur robotics, the choice comes down to these three:

In a stepping motor, applying power causes the shaft to rotate a few degrees, then stop. Continuous rotation of the shaft requires that the power be pulsed to the motor. As with continuous DC motors, there are sub-types of stepping motors. Permanent magnet steppers are the ones you'll likely encounter, and they are also the easiest to use.

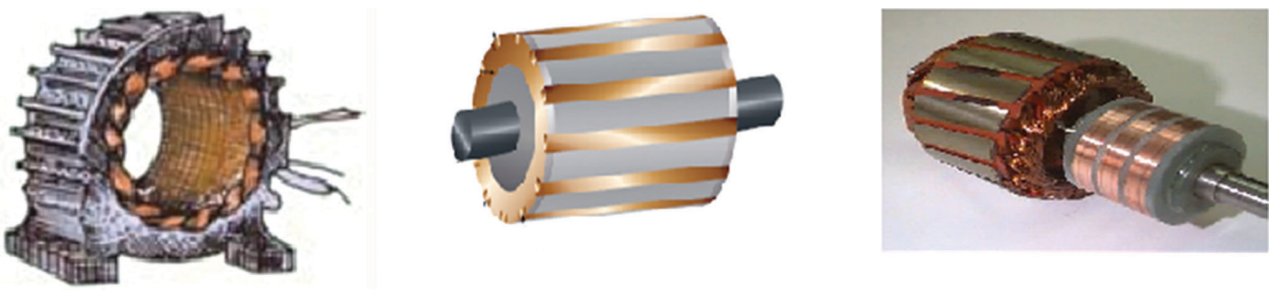

Stator

Rotor
(Squirrel cage type)

Rotor
(Slip-ring type)

FIG 4.9 Stator and rotor of 3 phase induction motor

4.5 Stepper motor

A stepper motor is an electromechanical device which converts electrical pulses into discrete mechanical movement.

4.5.1 Step angle

Step angle is defined as the angle which the rotor of a stepper motor moves when one pulse is applied to the input of the stator. The position of a motor is decided by the step angle and is expressed in degrees

Step angle, (θ_S) = 360/m x n, whereas

m – Number of phases.

n – Number of rotor teeth.

Stepper motor can be divided into the following three categories.

1. Variable reluctance (VR) stepper motor
2. Permanent magnet (PM) stepper motor
3. Hybrid stepper motor

4.5.2 Variable reluctance stepper motor

It is the most basic type of stepper motor. The VR stepper motor has stator and rotor. The stator windings are wound on the stator poles. The rotor carries no windings. Rotor poles are of a ferromagnetic material. The rotor is a salient pole type. This motor may be single stack or multi stack type. This is called variable reluctance motor because the reluctance of the magnetic circuit formed by the rotor and stator teeth varies with the angular position of the rotor. The direction of motor rotation is independent of the polarity of the stator current.

4.5.3 Permanent magnet stepper motor

In this motor also stator winding are wound on the stator poles. The stator is multipolar. The rotor is generally cylindrical and rotor poles are permanently magnetized. The direction of motor rotation depends on the polarity of the stator current.

4.5.4 Hybrid stepper motor

It combines the features of variable reluctance and permanent magnet stepper motors. This is the most popular type of stepper motor. It has wound stator pole and permanently magnetized rotor poles.

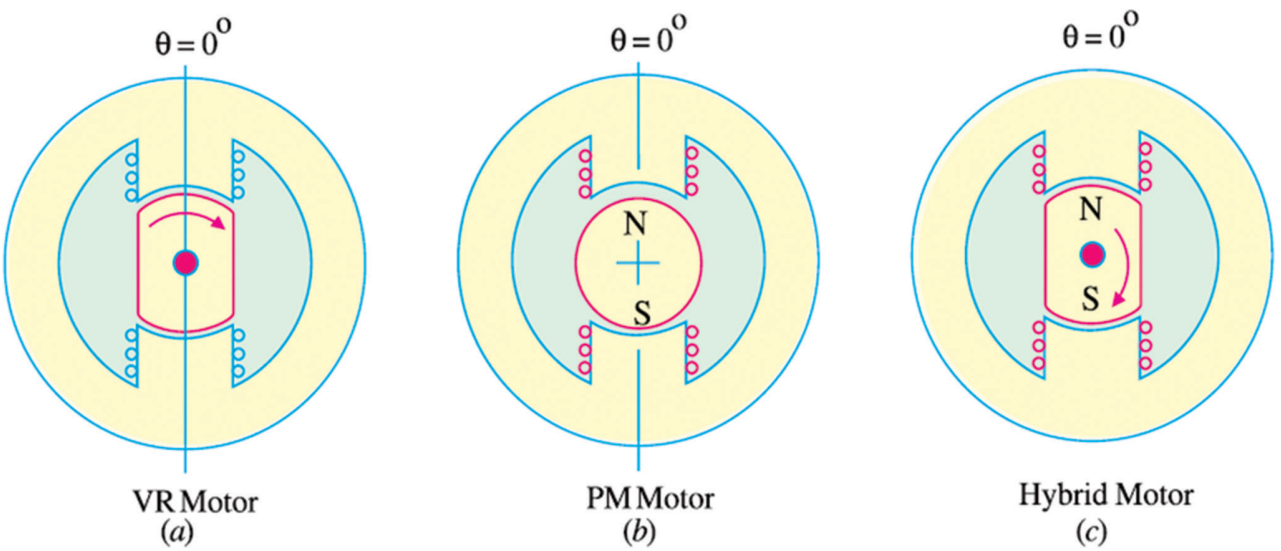

FIG 4.10 Types of stepper motor

The important features of the hybrid motors are its rotor structure. A recent type motor, a disc rotor is used which is magnetically, axially to give a small stepping angle and low inertia.

i) Advantages of stepper motor

1. The rotating angle of the motor is proportional to the input pulse
2. The motor has full torque at stand
3. Excellent response to starting, stopping and still reversing

ii) Disadvantages of stepper motor

1. Resonances can occur if not properly controlled
2. Not easy to operate at extremely high speeds

iii) Uses of stepper motor

1. It can be held at a particular position of the shaft
2. Ideal for many autonomous robots requiring higher precision

Points to remember

1. AC generator is also called as alternator or AC Synchronous generator.
2. Stationary armature and rotating field is most advantageous one.
3. Stator is the stationary part and rotor is the rotating part.
4. Alternator are constructed in two types
   a) Salient pole alternator
   b) Non- salient pole alternator
5. Salient pole type the diameter of stator is large and length is short
6. Non – Salient pole type the diameter of stator is short and length is long
7. AC motors are classified into
   a) Synchronous motor
   b) Induction motor
8. Synchronous motor is running at synchronous speed which is $N_S = \frac{120f}{P}$
9. Synchronous motors are used for power factor correction
10. Induction motor can also be treated as rotating transformer
11. Induction motors are widely used in industrial drives
12. For cooling purpose, light aluminum fans are used in three phase AC motors
13. No external supply is given or taken in squirrel cage rotor
14. In a single phase motor, stator windings are:
    a) Main winding
    b) Auxiliary winding
15. Either by changing main winding terminals or by changing auxiliary winding terminals, the reversal of direction of rotation is obtained in capacitor type motors
16. Stepper motor is an electro mechanical device

4.6 Conclusion

In this unit the students can gain the knowledge of AC Generator (Alternator), AC Motor - Single phase motor, AC Motor – Three phase motor, Stepper motor and its applications with updated technology.

Activities

1. Construct a small working model by using stepper motor (children toy)
2. Identify the motors which is used in the following domestic appliance.
   a) Mixie b) Grinder c) Washing machine d) Fan

Glossary

Alternator (or) AC generator	மாறுதிசை மின்னாக்கி
Stator	நிலையி
Rotor	சுழலி
Slot	பள்ளம்
Squirrel cage rotor	அணில் கூடு வகை சுழலி
Stepper motor	படி நிலை மின்னோடி

Evaluation

4K9LP

PART A **(1 mark)**

Choose the correct answer

1. Armature core is laminated
   a) To reduce hysteresis loss
   b) To reduce eddy current loss
   c) To reduce copper loss
   d) To reduce mechanical losses
2. Slot types in the stator core of an alternator are
   a) Wide open slots
   b) Semi – closed slots
   c) Closed slots
   d) Semi – open slots
3. Which type of rotor is used in low and medium speed alternators?
   a) Salient – pole type rotor
   b) Cylindrical type rotor
   c) Squirrel cage type rotor
   d) None of the above
4. The stator having small in diameter and large in axial length is called
   a) Salient – pole type alternators
   b) Turbo alternators
   c) DC generator
   d) DC motor

5. Which type of rotors is used in alternator for getting very high speed?
   a) Salient pole type
   b) Smooth cylindrical type
   c) Squirrel cage type
   d) slip ring type
6. Axial ventilating holes are provided to
   a) Increase eddy current
   b) Increase cooling effect
   c) Reduce eddy current
   d) Reduce cooling effect
7. A motor which is running in synchronous speed is called as
   a) Synchronous motor
   b) Induction motor
   c) Three phase motors
   d) Single phase motors
8. The rotor used in three phase induction motor is
   a) Squirrel cage rotor
   b) Salient – pole type rotor
   c) Non- salient pole type rotor
   d) Cylindrical type rotor
9. Which is not the advantage of three phase Induction motor?
   a) Very simple in construction
   b) Cost is low
   c) Very reliable
   d) Not easy to operate
10. Squirrel cage induction motors are used in
   a) Lathes
   b) Drilling machines
   c) Fans
   d) Crane
11. In which the slip ring induction motor is not used?
   a) Lifts b) Hoists
   c) Compressors d) Lathes
12. One horse power is equal to
   a) 736 watts b) 756 watts
   c) 746 watts d) 766 watts
13. In India, frequency is
   a) 25 Hz b) 50 Hz
   c) 60 Hz d) 40 Hz
14. Which one is in correct?
   a) Single phase motors are not self starting
   b) Single phase motors are self starting
   c) Three phase motors are not self starting
   d) Three phase motors are self starting
15. Which motor is used in electric mixie?
   a) Split phase motors
   b) Shaded pole motors
   c) Capacitor start motors
   d) Universal motors
16. Which motor is used in both AC and DC supply?
   a) Split phase motor
   b) Shaded pole motor
   c) Universal motor
   d) Capacitor start motor

PART B (3 mark)

Write down the answers shortly

1. What are the advantages of AC generator?
2. State the types of armature slots.

3. Mention some of the advantages of three phase induction motor.
4. What are the advantages of a single phase motor?
5. State the applications of synchronous motor.
6. Write some of the applications of squirrel cage induction motor.
7. Write down the few applications of slip ring induction motor.
8. Why single phase motor is not a self starting?
9. Name the two windings in stator of a single phase induction motor.
10. What is meant by 'Slip speed'?
11. Write some of the disadvantages of squirrel cage induction motor?

PART C (5 mark)

Answer the questions not exceeding one page

1. Compare the salient pole type rotor with smooth cylindrical type rotor.
2. Explain the advantages of stationary armature and rotating field system.
3. What are the types of single phase motors?
4. Explain the construction of squirrel cage rotor.
5. What are the applications of following motors?
   a. Spilt phase motor
   b. Universal motor

PART D (10 mark)

Answer the questions not exceeding two pages

1. Explain the salient pole alternator with neat sketch.
2. With neat sketch, explain the operation of an alternator.
3. Explain the construction and operation of single phase capacitor start Induction run motor.
4. Explain with neat sketch about universal motor.



Reference Book

1. 'A text book of Electrical Technology' Volume II by B.L. Theraja and A.K. Theraja, S. Chand & Company Ltd.



Reference Internet Source

https://www.electrical4u.com/



UNIT 05

Starters and controlling devices

6L8K9

LEARNING OBJECTIVE

Starters and controlling device equipments are used to control electrical machines for proper operation and their durability. It is necessary for the operators and students to know about starters and controlling equipment devices.

TABLE OF CONTENTS

5.1 Introduction

5.2 Direct Current (DC) motor starters

5.3 Alternating current (AC) motor starters

5.4 Conclusion

5.1 Introduction

For DC and AC motors, starters are generally used for starting and safety purposes.

5.2 DC motor starter

DC motor starter consists of an electronic motor and a solenoid. It is an electrical device used to start and stop the motor safely

5.2.1 Essential of starter

Generally, while starting all the motors it requires high starting current. Let us see how the DC motors take more current while starting.

The armature current of the DC motor is given by I_a.

$$I_a = \frac{V - E_b}{R_a}$$

V = Voltage

E_b = Back emf or counter emf

R_a = Armature resistance

When the motor is at rest, the induced back emf (E_b) in the armature is zero. Because the back emf is directly proportional to the speed of the motor ($E_b \alpha N$). During start, the armature current is restricted by the resistance of the armature circuit. The armature resistance is very low if full

voltage is applied across the terminals of the motor and the armature will receive heavy current, since the armature current (Ia) is inversely proportional to the resistance of armature circuit.

Example

10HP, 200 volt shunt motor has full load rated current 40A and armature resistance is about 0.2Ω. If the motor is directly switched ON to the supply, it would take armature current.

$$I_a = \frac{200 - 0}{0.2}$$

$$I_a = \frac{200}{0.2} = 1000\text{A}$$

The back emf is zero while starting. The value of this current is 25 times of the full load current. This high starting current may result in:

i. Large current flowing through the armature winding causing production of heat and it will damage the armature winding.
ii. Excessive sparking of the commutator.
iii. Excessive voltage drops in the line to which the motor is connected. Thus, the operation of the appliances connected to the same line, may not work.

To avoid this excessive current, a variable resistance is connected in series with the armature circuit. This additional resistance limits the starting current. This serves the necessity of starters.

The starter has two basic functions.

i. Reducing starting current.
ii. Ensuring safe operation during start.

5.2.2 Types of DC motor starter

1. Three point starter.
2. Four point starter.

1. Three point starter

Three point starters are used to start the shunt motor. The diagram of the three point starter is shown in 5.1. In three point starter, three terminals L, A and F (Line, Armature and Field) are available. In this starter, the resistance elements are mounted on the back side of a slate board. On the front side of the board, brass studs are provided and the resistance junctions are connected with each brass stud. Two protective devices overload release and no volt release is incorporated in the circuit. The handle of the starter is fixed in such a way to move the brass studs.

When the handle touches the first stud, the full resistance is connected in series with the armature. The field circuit is connected across the supply voltage. The handle is moved over the studs, the resistance connected in series with the armature circuit is gradually cut off. The handle movement is controlled by the spring tension as in fig. 5.1.

A soft iron piece is attached to the handle by the electro-magnet (NVR) while the handle reaches the 'ON' position. In case of power failure or low voltage, the electro magnet de-energizes and releases the armature. The tension of the spring forces to bring the handle 'OFF' position.

a) Protective devices

A device used to protect equipments, machineries, components and devices in electrical and electronic circuit against short circuit, over current and earth fault, is called as protective devices.

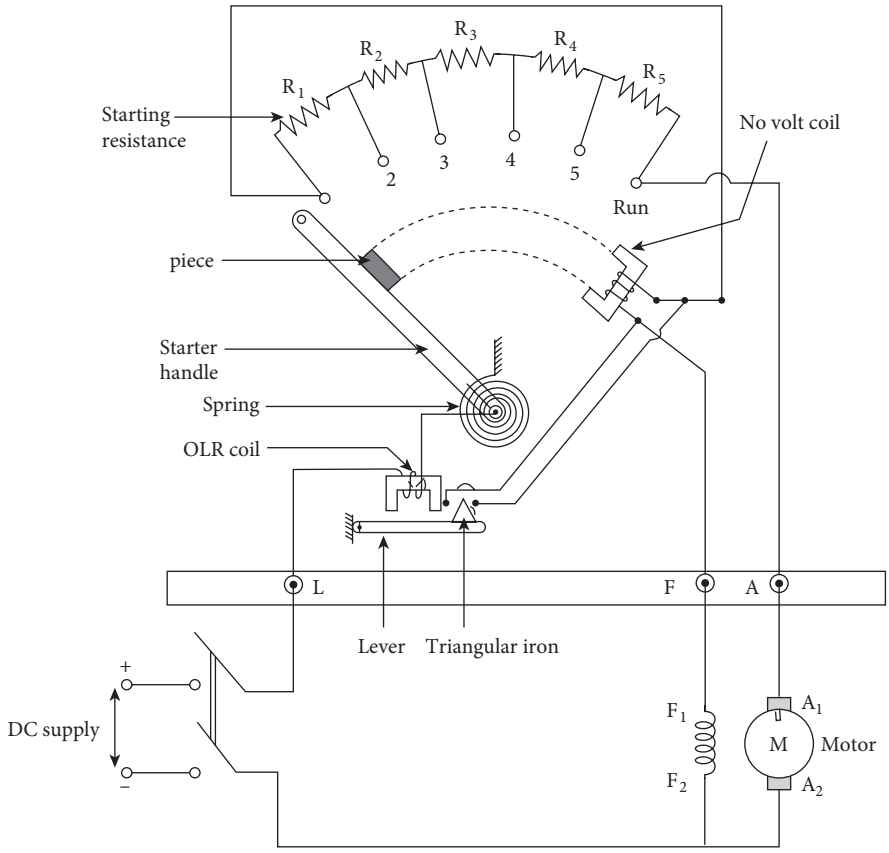

FIG. 5.1 Three point starter

i) No-Volt Release (NVR)

NVR consists of an electromagnet which is connected in the field circuit. As soon as the field circuit is connected with supply, it gets energized and makes the handle in the 'ON' position. In case of power failure, it de-energizes and the handle is released from 'ON' position. Then the handle returns to 'OFF' position, due to the action of the spring. If this system is not, the supply restores and current through the armature becomes high and will damage the armature windings.

ii) Over load release (OLR)

OLR is an electro magnet which is energized by the line current. When the load on the motor is increased to a pre-determined value, the magnetizing force established is sufficient to lift movable iron. When it is lifted by the electro magnet of OLR, it short circuits the terminals of the coils of no volt release (NVR). Hence, the no volt coil is de-energized and the starter handle back to 'OFF' position. Thus the overload release protects the motor against overloads.

This starter is not generally used where the field current is often adjusted for a higher speed than the normal speed, the handle returns to the 'OFF' position. This may cause reduction in field current.

iii) Disadvantages

The drawback of 3 point starter for motor is with a large variation of speed by adjustment of the field rheostat. To increase the speed of the motor, the field resistance should also be increased. Now, the current in the shunt field is reduced. The field current becomes very low when we add high resistance to obtain a high

speed. Very low field current will hold electromagnet too weak to overcome the force exerted by the spring. The holding magnet may release the handle of the starter during the normal operation of the motor. Thus, disconnects the motor from the line.

Hence, to overcome this difficulty a four point starter is used.

2. Four point starter

The four point starter is used for starting shunt and compound motors. The diagram of four point starter is shown in fig. 5.2.

In four point starter, the four terminals L+, L-, A and F (Line +, Line-, armature and field) are available.

The construction and operations are the same as that of the three point starter, except the having some difference.

In three point starter, the coil of the no volt release is connected in series with the field circuit. But in a four point starter, it is connected across the supply by a line through protective resistance R_P. The no volt coil is independent from field current. So any change in shunt field current does not affect the current through the no volt coil. The current through the no volt coil does not decrease even when the field rheostat is adjusted to vary the speed. The electromagnetic produced by the no volt coil will always same and sufficient to hold the handle in 'ON' position.

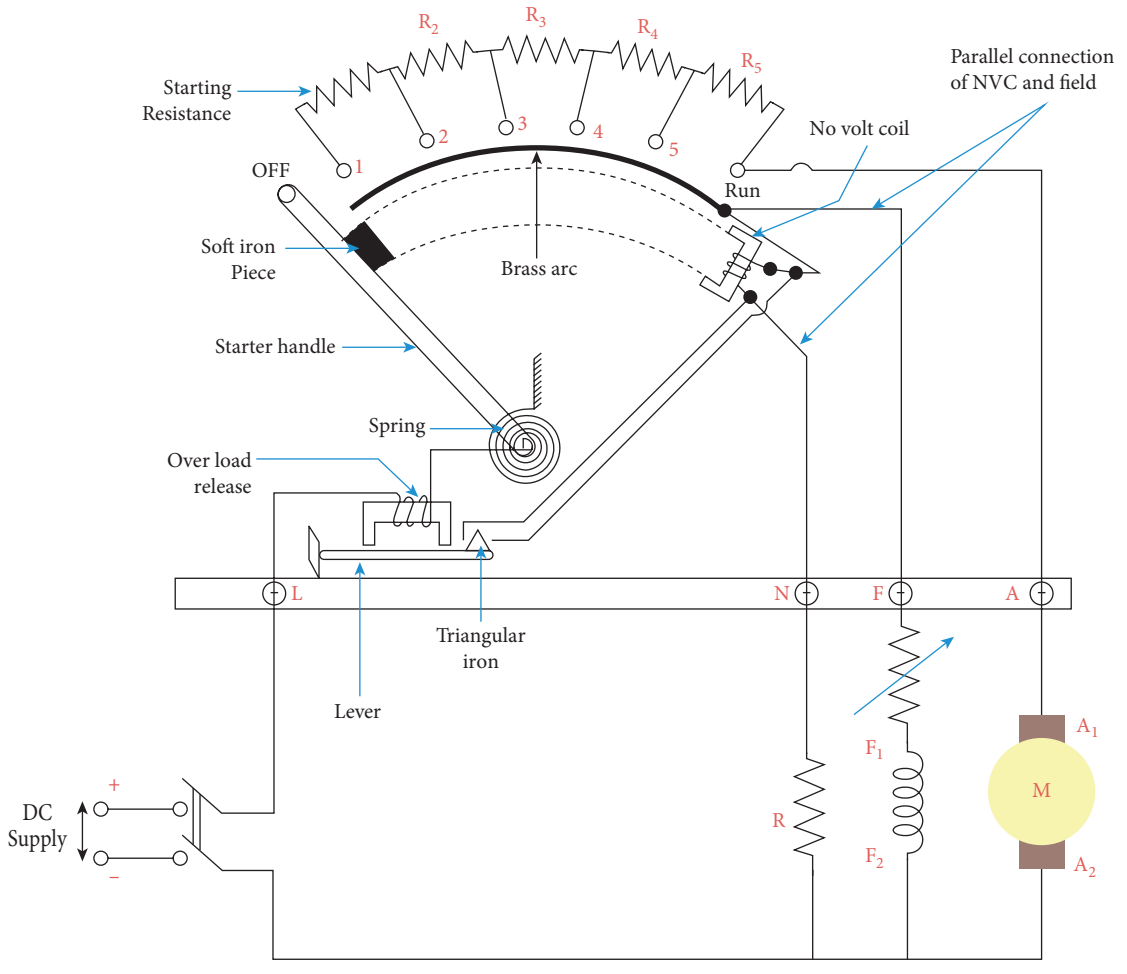

FIG. 5.2 Four point starter

5.2.3 Differences between three point starter and four point starter

Sl. No.	Three point starter	Four point starter
1	It has three terminals. (L, F and A)	It has four terminals. (L+, L-,A and F)
2	NVR is connected in series with the field coil.	NVR is connected in parallel with the field coil.
3	Used for DC shunt motors	Used for DC shunt and compound motors.

5.3 AC motor starter

5.3.1 Types of induction motor starter

i. Full voltage direct on line starter
ii. Star- delta starter
iii. Auto transformer starter
iv. Rotor resistance starter
v. Soft starter

i. Full voltage direct-on-line starter

It is recommended to three phase squirrel cage induction motors and be started with reduced voltage applied across the stator terminals. But the motors up to 5 HP ratings may however be started with Direct-On-Line (DOL).

DOL method of starting the induction motor is applicable to a rating of 5 HP is shown in fig.5.3. In this, in addition to fuses, thermal overload relay is used to protect the motor windings against over load.

When the 'Start' push button is pressed, the contactor coil 'A' becomes energized and its open contacts are closed. The motor gets connected across the supply mains through the main contact. The motor continues to get supply even when the pressure on the push button is released. The contact coil will then gets supply through the sealing contact 'A'.

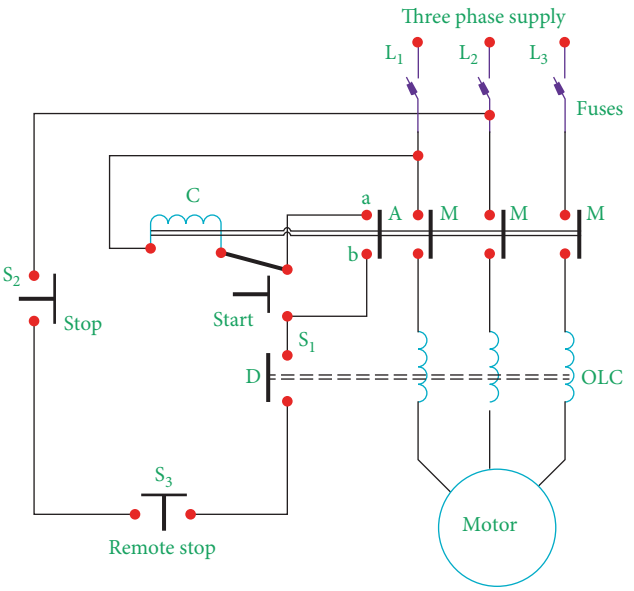

FIG. 5.3 DOL starter

Contact point 'A' is therefore called the hold on contact. When the 'STOP' push button is pressed, the coil gets de-energized the main contacts get open and the motor stops. In case of over load, the contact of the over load relay (OLR) will open and subsequently the motor will stop. Fuses are provided for short circuit protection.

(a) Advantages of DOL starter

i. Simple in construction.
ii. Easy to install.
iii. Easy to maintain.
iv. Less expensive.

(b) Disadvantages of DOL starter

i. Used only for fractional horse power motors.
ii. Starting current is high.
iii. Suitable only for the motors which attains rated speed in a very short time.

ii. Star-Delta starter

In this method, the stator-phase windings connected in 'Star' and full voltage is connected across its three terminals. As the motor picks up speed, the windings are disconnected through a switch and they are reconnected in 'Delta' across the supply terminals. The current drawn by the motor from the line is reduced to 1/3 as the current if connected in delta.

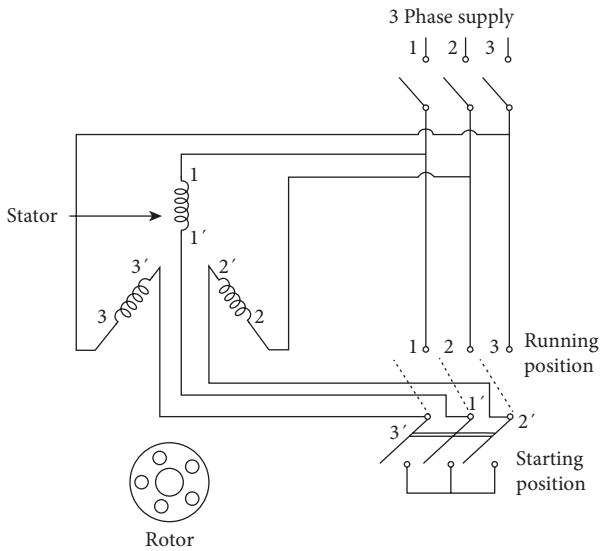

FIG. 5.4 Star delta starter

a) Reduce torque due to star connection

Torque developed by an induction motor is proportional to the square of the applied voltage. As the phase voltage is reduced to 1/3 times that in star connection, the starting torque will be reduced to one third. To get full torque in the motor it must be switched over to delta connection. A simple manual star-delta starter is in fig. 5.4.

While making connections for star delta starter, care should be taken such that sequence of supply connections to the winding terminals does not change, while changing from star to delta connection. Otherwise the motor will start to rotate in the opposite direction and connections are changed from star to delta. Star-delta starters are available for manual operation by using push button control. In an automatic star-delta starter, Time Delay Relay (TDR) is used through which star to delta connections take place automatically with some pre-fixed time delay. The delay time of the TDR is fixed, keeping in view the starting time of the motor.

(b) Advantages

i. Less expensive.
ii. Starting current reduced to one-third of direct online starting current.
iii. Easy to operate.

(c) Disadvantages

i. Low starting torque.
ii. Six terminal motor required. (Delta connected)
iii. It requires 2 sets of cables from starter to motor.

iii. Auto-transformer starter

Auto transformer starter consists of an auto transformer and a switch as shown in fig. 5.5.

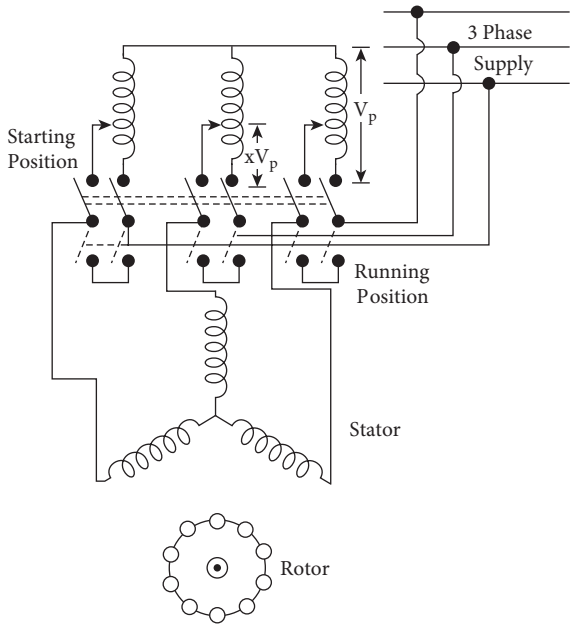

FIG. 5.5 Auto transformer starter

When the switch 'S' is put in start position, a reduced voltage is applied across the motor terminals. When the motor picks up speed, then say to 80 % of its normal speed, the switch is put to run position. Then the auto transformer cut the circuit OFF and full rated voltage gets applied across the motor terminals.

The circuit diagram in fig. 5.5 is of a manual auto-transformer starter. This can be made by push button operated automatic controlled starter, so that the contact switches over from start to run position as the motor speed picks up 80% of its speed. Over load protection relay has not been shown in fig. 8.5.

The switch 'S' is an air break type for small motors. There are more than one tapping to enable the user to select any suitable starting voltage depending upon the conditions.

iv. Rotor resistance starter

The easiest method of starting slip ring induction motor is to connect some extra resistance in the rotor circuit as in fig.5.6.

Connection of extra resistance in the rotor circuit decreases the starting current and at the same time increases the starting torque.

As the motor starts rotating the extra resistance is cut off. When the motor attains rated speed, the resistance is fully cut off and slip ring terminals are short circuited. The motor now operates on its own characteristic which gives rise to maximum torque at a low slip.

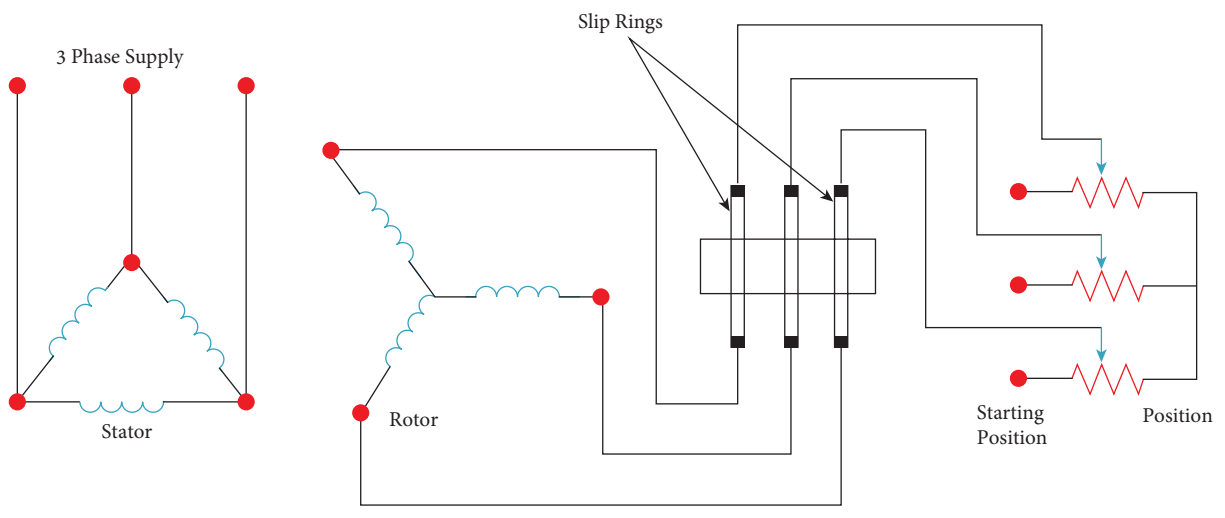

FIG. 5.6 Rotor resistance starter

v. Soft starter

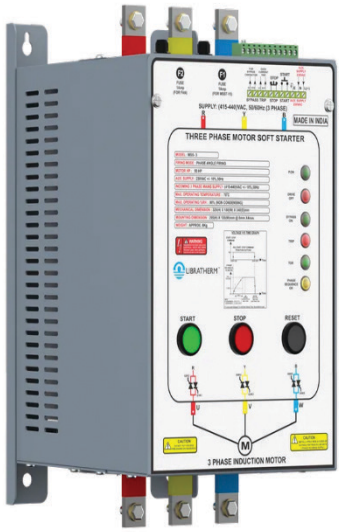

5.7 Soft starter

Soft starter is a starting device used for the acceleration, de-acceleration and protection of the three phase electrical induction motors through the controlling applied voltage to three phase motor. Soft starter is another form of reduced voltage starter use for starting 3 phase induction motor. Soft starter also called a Solid-State controller.

Soft Starter does not change frequency as VFD. Instead it Ramp up voltage level applied to motor from initial value to full voltage.

a) Soft starter block diagram

Soft starter contains only a few main components thyristor to regulate the voltage to the motor. In addition to this heat sink and fan for dissipate the heat to the environment.

Depending on the model of the soft starter, it can be equipped with a built-in electronic overload relay (EOR) eliminating the need for an external relay.

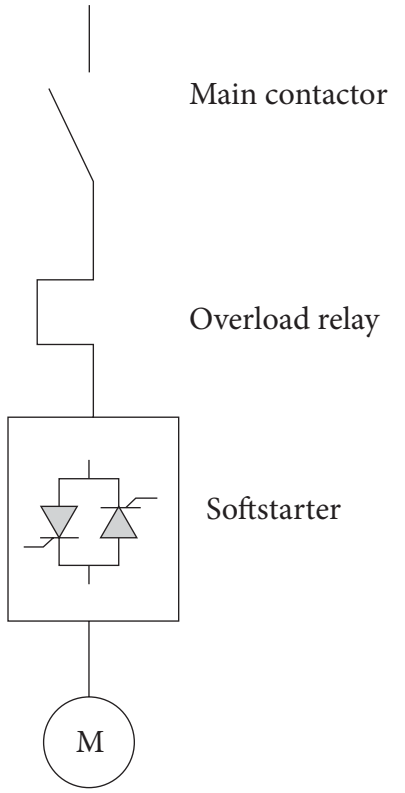

FIG 5.8 Soft starter single line diagram

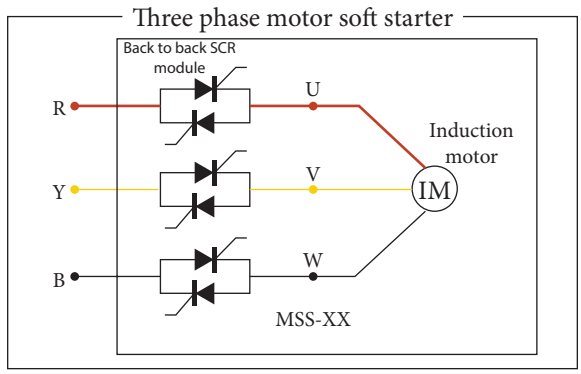

FIG 5.9 Soft starter -3 phase motor line diagram

(b) Advantages of soft starter

1. Improved efficiency: The efficiency of soft starter system using solid-state switch is more owing to the low on-state voltage.
2. Controlled startup: The starting current can be controlled smoothly by easily altering the starting voltage and this ensures smooth starting of the motor without any

jerks this is big advantage of the soft starter.

3. Controlled acceleration: Motor acceleration is controlled smoothly using a soft starter.
4. Low cost and size: This is ensured with the use of solid-state switches.

5.4 Conclusion

In this unit, we have learned about the starters and controlling device equipment that is used in bothAC and DC motors to be control for proper operation and their durability. It is necessary for the operators and students to know about starters and controlling equipment devices

Activities



1. Collect different starters from the repaired motor which is not in use.
2. Check the types of starters used in the home appliances.
3. Create a portfolios for each starters collected.

Glossary



Armature	மின்னகம்
Back electro motive force	எதிர் மின் இயக்கு விசை
Induction motor	தூண்டல் மின்னோடி
Three point starter	மூன்று முனை துவக்கி
Symmetrical fault	சமச்சீர் பழுதுகள்

Evaluation





Part–A (1 Mark)

Choose the correct answer

1. While starting, value of current taken by all the motor is
   a. Zero
   b. Less
   c. High
   d. Very high
2. The value of armature current depends upon
   a. Capacitance
   b. Inductance
   c. Resistance
   d. Impedance

3. Due to high current in armature, which of the following effect does not occur?

a. Over heat

b. Sparking

c. Voltage drop

d. Increase in efficiency

4. In what type of DC motor, the three point starter is used?

a. Shunt motor

b. Compound motor

c. Shunt and compound motor

d. Series motor

5. The terminal of the three point starter is

a. Line, Armature, Field coil

b. Line, Resistance, Field coil

c. Armature, Field coil, Resistance

d. Resistance, Line, Armature

6. The protective devices used in the three point starters are

a. No volt release coil

b. Over load release coil

c. No volt and over load release coil

d. Electromagnet coil

7. What should be done to obtain the increase speed in three point starter?

a. Increase resistance value

b. Field current value should be change

c. Decrease resistance value

d. Voltage should be maintained

8. In four point starter, how the no volt release coil should be connected with field coil.

a. in series

b. in shunt

c. directly

d. in series and parallel

9. The current taken by the induction motor is in the order of ------- times that of full load current at starting time.

a. 1 to 8 b. 5 to 8

c. 1 to 10 d. 5 to 10

10. Induction motor is operated with full voltage in

a. Star-delta starter

b. Rotor resistance starter

c. Direct-on-line starter

d. Auto-transformer starter

11. ---------- induction motor is operated with low voltage.

a. Direct-on-line and auto transformer starter

b. Star-delta and rotor resistance starter

c. Star-delta and auto transformer starter

d. Direct-on-line and rotor resistance starter

12. In which starter, the starting current is reduced to one - third value?

a. Direct-on-line starter

b. Star delta starter

c. Rotor resistance starter

d. Auto transformer starter

13. Which is the component is used for voltage reducing in soft starter?

a. Over load relay

b. No volt release coil

c. thyristor

d. contact pointers

PART–B (3 Mark)

Answer the questions in brief

1. State the effects caused by the flow of heavy armature current in DC motor without starters.
2. What are the two basic functions of starter?
3. What are the draw backs of three point starter?
4. State the difference between three point and four point starter.
5. What are the different types of starters used in an induction motor?
6. What are the advantages of soft starter?
7. Draw the block diagram of soft starter?

PART–C (5 Mark)

Answer the questions in one page

1. State the necessity of starters in DC motor with example.
2. Draw the circuit diagram of four point starter.
3. With a neat sketch, explain the operation of auto-transformer starter.
4. Draw the diagram of 3 point starter and label its parts.
5. Draw the diagram of 4 point starter and label its parts.

PART–D (10 Mark)

Answer the questions in two page

1. Explain the construction and operation of three point starter with a neat sketch.
2. With a neat diagram, explain the construction and working principle of star-delta starter.
3. Explain the construction and operation of direct-on-line starter with a neat sketch.



Reference Book

1. A text book of 'Electrical Technology' Volume-III B.L.Theraja and A.K.Theraja, S.Chand & Company Ltd.



Reference Internet Source

1. http://www.wikipedia.org
2. https://www.electrical4u.com



UNIT 06

Electric drives

LEARNING OBJECTIVE

In this lesson, students have to learn about the electric drives needed for various requirements and its control systems.

TABLE OF CONTENTS

6.1 Introduction
6.2 Electric drives
6.3 Selection of drives
6.4 Electric traction
6.5 Conclusion

6.1 Introduction

Electric drive is a device which converts electrical energy into mechanical energy to do a particular work connected to it.

The electric drive designed electric train is shown in figure 6.1. It is operated by a high-torque electric DC series motor. The system used to control the speed is called power drive. While using this electric motor, its speed is controlled by the current, voltage and frequency.



FIG. 6.1 Electric train

6.2 Electric drives

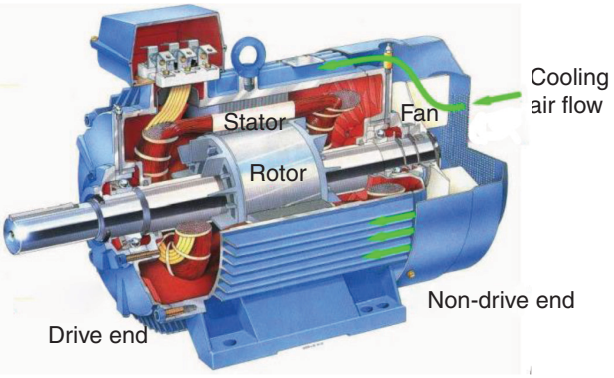

FIG. 6.2 Electric drive

The internal construction of an electrical drive is shown in fig. 6.2. Depending on the applications, the motor can be classified into different categories. According to the design, the drives are classified as

i. Individual drive
ii. Group drive
iii. Multi-motor drive.

6.2.1 Classification of electrical drives

1. Depending on the power supply,
   A. Direct current electric drive
   B. Alternating current electric drive
2. According to the process of electric drives,
   A. Continuous duty drive
   B. Short-term duty drive
   C. Intermediate duty drive
3. According to the control of drives,
   A. Manual
   B. Semi automatic
   C. Automatic
4. According to the number of machines,
   A. Individual drive
   B. Group drive
   C. Multi-motor drive
6. Based on speed
   A. Reversible and non reversible speed control
   B. Variable speed control

6.2.2 DC drives

Generally DC drive is one type of electric machine. This converts electrical energy into mechanical energy. Its structure is in fig. 6.3. The speed of the drive will depend on the amount of voltage given to it. Small type drive is used in toys. Large size of electric drive is used in electrical vehicles such as Hoists and Steel rolling mills.

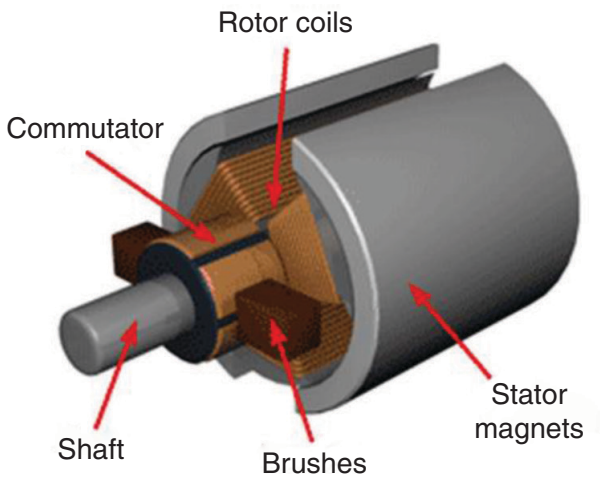

FIG. 6.3 DC drive

a. Definition

DC drive is a driving speed control system which converts the input AC supply to the DC using converter circuit to control the speed of DC machines. Earlier, the variable DC voltage was generated by DC generator to control the speed of a DC drive.

b. Construction of a DC drive

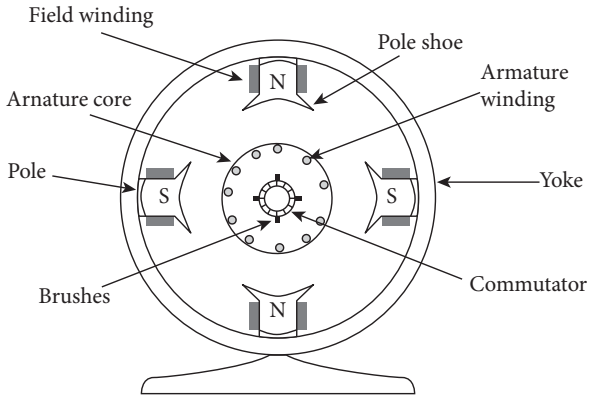

FIG.6.4 Schematic diagram of a DC drive

DC drive consists of six main parts. They are as follows:

i. Yoke

ii. Magnetic field system

iii. Armature core

iv. Armature winding

v. Commutator

vi. Brushes

i) Yoke

The outer frame of a DC drive is a hollow cylinder made up of cast steel or rolled steel is known as yoke. The yoke serves following two purposes

- It supports the field pole core and acts as a protecting cover to the machine.
- It provides a path for the magnetic flux produced by the field winding.

ii) Magnetic field system

The magnetic field system of a DC drive is the stationary part of the machine. It produces the main magnetic flux in the drive. It consists of an even number of pole cores bolted to the yoke and field winding wound around the pole core. The field system of DC drive has salient poles i.e. the poles project inwards and each pole core has a pole shoe having a curved surface. The pole shoe serves two purposes

- It provides support to the field coils.
- It reduces the reluctance of magnetic circuit by increasing the cross sectional area of it.

The pole cores are made of thin laminated sheets made of steel which are insulated to reduce the eddy current loss. The field coils are connected in series with one another in such a way that when the current flows through the coils, alternate north and south poles are produced.

iii) Armature core

The armature core of DC drive is mounted on the shaft and rotates between the field poles. It has slots on its outer surface and the armature conductors are put in these slots. The armature core is a made up of soft steel laminations which are insulated each other and tightly clamped together. The laminated armature core is used to reduce the eddy current loss.

iv) Armature winding

Armature is the winding of an electrical machine which carries alternating current. Due to the commutator action, the armature winding conducts AC even on DC machines

There are two types of armature windings are used – Lap winding and Wave winding.

v) Commutator

A commutator is a rotary electrical switch that is used to convert AC to DC that periodically reverses the direction of the current between the rotor and the external circuits. The commutator assures that the current from the generator always flows in one direction. The brushes ride on the commutator and make continuous electrical connection between the generator and the load. The commutator is made of wedge-shaped copper segments insulated from each other and from the shaft by mica sheets. Each segment of commutator is connected to the ends of the armature coils.

vi) Brushes

The brushes are mounted on the commutator and are used to inject the current from the DC source into the armature windings. The brushes are made of carbon and are supported by a metal box called brush holder. The pressure exerted by the brushes on the commutator is adjusted and maintained at constant value by means of springs. The current flows from the external DC source to the armature winding through the carbon brushes and commutator.

c. Types of DC drives:

There are four types of DC drive.

1. Permanent magnet DC drives.
2. Series field DC drives.
3. Shunt field DC drives.
4. Compound field DC drives.

6.2.3 AC drive

a) Definition

The drive which converts AC power into mechanical power by using an electromagnetic induction is called AC drive. The stator and the rotor are the two most important parts of the AC drive. The stator is the stationary part and the rotor is the rotating part. AC drive functions with single phase or three phase.

AC drive is a device used to control the speed of an electrical drive in order to

- Enhance process control.
- Reduce energy usage and generate energy efficiently.
- Decrease mechanical stress on drive control applications.
- Optimize the operation of various applications relying on electric drives.

b) Working principle of AC drive

The operation of an AC drive depends on the principle of magnetism. When an electric (AC) charge applies to the stator winding to develop an alternating flux and this rotating flux called "Rotating Magnetic Field". The induced current produces alternating flux around it. It should be noted that the stator flux lags behind the rotor flux. Due to the relative velocity between the rotating stator flux and the rotor, the rotor rotates in the same direction as that of the stator flux to minimize the relative velocity. This is the basic working principle of the induction drive. The difference between the synchronous speed (N_s) and the actual speed (N) of the rotor is known as the slip.

c) Classification of AC Drives

The different types of AC Drive are

- Induction drives
- Synchronous drives
- Single phase drives
- Three phase drives
- Squirrel cage induction drive

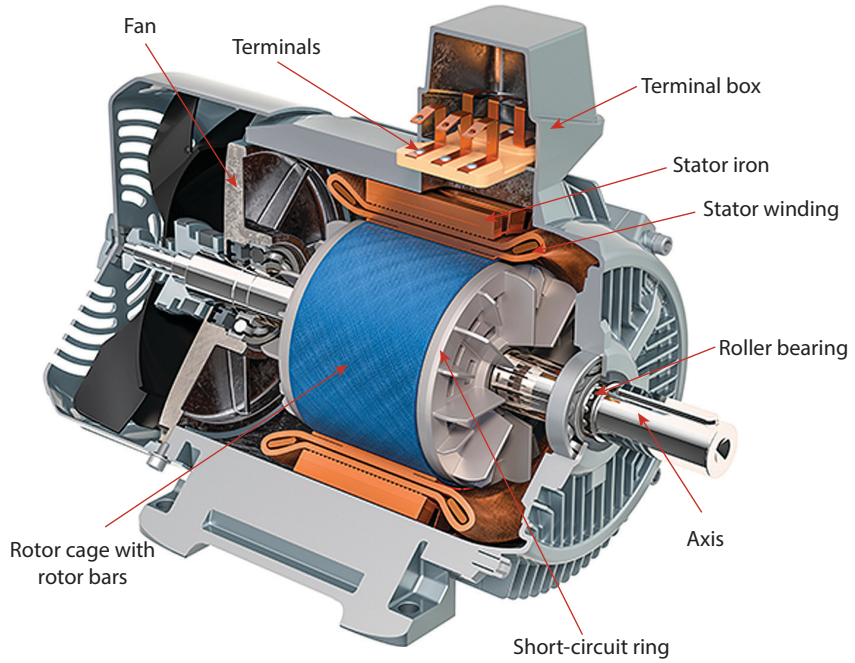

FIG.6.5 Construction of AC drive

6.2.4 Comparison of DC and AC drives

S.No.	DC drive	AC drive
1	Energy and method of control is simple	Energy and method of control is difficult
2	More maintenance is required.	Less maintenance is required.
3	Commutator is required	Commutator is not required
4	Rapid speed control	Gradual speed control
5	Speed and design ratings are less	Speed and design ratings are high

6.2.5 Variable Frequency Drive (VFD)

Definition

A variable frequency drive (VFD) is a type of motor which controls the speed of an AC motor by varying the frequency and voltage of its power supply. The VFD also has the capacity to control raise-up and raise-down of the motor during start or stop, respectively.

Functions of variable frequency drive

Whenever three phase supply is given to three phase induction motor rotating magnetic field is produced which rotates at synchronous speed given by

$$N_s = \frac{120f}{P}$$

Thus by controlling the supply frequency smoothly, the synchronous speed can be controlled over a wide speed

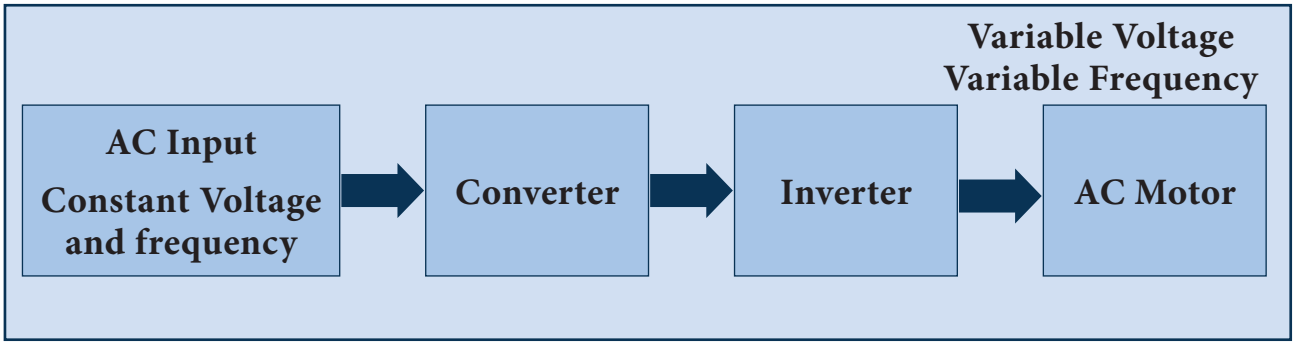

FIG.6.6 Schematic diagram of VFD

range. But form the basic transformer voltage equation we have the expression for the air gap flux

$$V = 4.44\Phi KNf \text{ or } \Phi = \frac{V}{4.44\ KNf}$$

Whereas

V - Supply voltage

K - Winding constant,

N - Number of turns per phase and

f - Frequency.

If the frequency is reduced the flux will gets increase which results in saturation of the stator and rotor magnetic cores. This saturation in turn results increase in no load current which is unwanted. Hence it is required to maintain the air gap flux constant when supply frequency is changed. From the above expression for flux Φ we can see that this can be achieved by changing the voltage correspondingly so as to maintain a constant variable frequency ratio. Hence with variable frequency control method which ensures constant flux Φ, we can get smooth speed control.

Such a constant variable frequency with variable voltage and frequency can be obtained using electronic converter and an inverter as shown in the fig. 6.6 above.

6.2.6 Advantages of electric drives

i. It has flexible control characteristics.

ii. Drives with fixed and dynamic characteristics change according to load requirements.

iii. Computers can be used to control the drive movements automatically by closed loop operation.

iv. Available with wide range of torque, speed and power.

v. It is applicable to function in the state such as explosion and radiation.

vi. It can start immediately even at full load of the drive.

vii. To control the speed and also simplest way to start and stop the drive.

6.3 Selection of drive

The choice of an electric drive depends on many factors. Some of the key factors are given below:

i. Depending on the nature of the speed, torque characteristics, speed control, speed limit, performance, the level of operation, speed of performance.

ii. Uninterrupted operating requirements will depend on the acceleration and initial loss and performance change.

iii. The source and the ability to meet the source will consist of voltage, voltage optimization, power factor and other loads, and restoration of power adaptability

iv. Basic capital and running cost and maintenance is required.

v. Space and weight should be less.

vi. Environmental and area of the space be selected.

vii. Reliability.

i. Individual drive

As shown in fig.6.7, this drive is driven by an electric machine with an individual machine. It provides movement to various areas and all the operations are done by the individual machine.

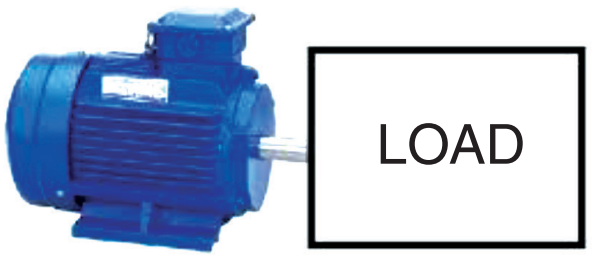

FIG. 6.7 Individual electric drive

It is applicable in automobile systems, computers, radios, and television.

ii. Group drive

This drive has an electric motor. It is connected with one or more roller bearing and axis as shown in fig.6.8. This axis is fitted with belts or gears. With this, a group of electrical drive are operated.

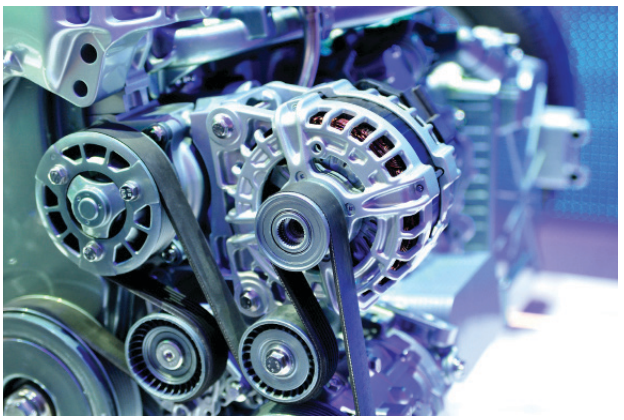

FIG. 6.8 Group electric drive

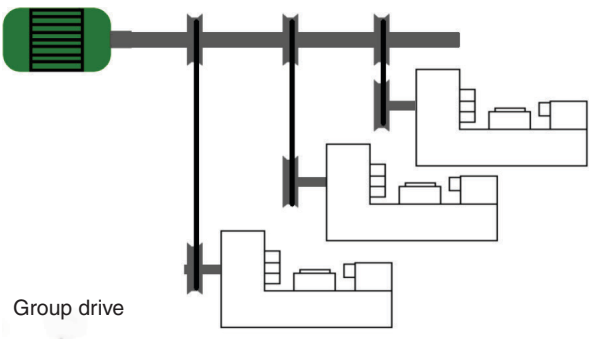

FIG. 6.9 Block diagram of group drive

a. Advantages

i. A large size of motor can be used instead of using small number of motors

ii. Low price.

b. Disadvantages

i. If the motor is in fault, the entire operation will be stopped

ii. The efficiency will be reduced due to losses by conduction of energy.

iii. Less security measures.

iv. No flexibility.

v. There will be more noise in the working area.

iii. Multi motor drive

Many electric drives combined with a single common controlled structure are known as multi motor drive system.

a. Advantages

i. Each drive is powered by a single electric motor. It can only stop or use the required motor.

ii. Individual drives can be controlled.

iii. If any drive fails, it will not affect the other drives.

b. Applications

i. Rolling mills

ii. Paper mills

iii. Escalators

iv. Mixer metal works.

6.4 Electric traction

The electric traction is divided into two types.

1. The Urban train and
2. The Sub-urban train.

1. Urban train

In this way the drives are given necessary power for two ways, as shown in fig 6.10.



FIG. 6.10 Electric train

1. Getting power from the overhead lines.
2. Getting power from the diesel drive.
3. The collector is mounted and the current passes through the overhead transmission line in it.

2. Sub-urban train

Sub-urban trains are used to travel short distances. The train is called the local train. The sub-urban train can be used to stop and park to a distance of 2 to 6 km intervals.

The main features of electric drives are given below

i. During starting the drive needs more torque.

ii. For economic reasons, AC traction requires single phase supply.

iii. For AC and DC, it causes interference in telephone lines and signals.

iv. Traction machines are mainly used for dynamic braking.

v. Mechanical brake is used where the engine need to stop at exact place.

6.5 Conclusion

The importance of drives, its types, working principles, and advantages and disadvantages were detailed which will be benefitted to learn the updated technology.

Very high speed trains (Bullet trains)



There is no engine in most high-speed trains. It runs to a speed of 600 km/hour. These trains operate in magnetic levitation mode. If attraction and repulsion forces are in equal, the train will be above the track. When the speed of the force increases, connecting trains will also run at high speed.

Activities

1. Create a small toy for children with an electric motor.
2. See the types of electric motor used in home appliances.
3. Select a toy car and identify what type of a drive it is.

Glossary

Squirrel cage motor	அணில் கூடு மின்னோடி
Synchronous motor	ஒத்தியங்கு மின்னோடி
Induction motor	தூண்டு மின்னோடி
Variable motor	மாறு வேக மின்னோடி
Motor shaft	மின்னோடி அச்சுத்தண்டு

Evaluation

XIUG1

PART- A (1 Mark)

Choose the correct answer

1. Elements of electric drive
   a) Electric motor and control system
   b) Electric motor
   c) Control system
   d) Voltage
2. In electric drive the energy conversion is _____
   a) Mechanical energy converted into electrical energy
   b) Electrical energy converted into mechanical energy
   c) Electrical energy converted into chemical energy
   d) Mechanical energy converted into sound energy
3. The individual drive is used in _____
   a) Computers
   b) Vacuum cleaner
   c) Cranes
   d) Jet pump
4. The speed of the DC drive depends on _____
   a) Current
   b) Voltage
   c) Frequency
   d) Power
5. In motors, the brushes are made of _____
   a) Bakelite b) Nylon
   c) Carbon d) Porcelin
6. Depending upon the load current the power _____ in the motor gets changed.
   a) Voltage b) Current
   c) Speed d) Power
7. Low and medium electric motors are
   a) 400-440V b) 200-230V
   c) 160-180V d) Above 11KV
8. The speed of variable frequency drive is by varying the _____ and voltage
   a) Frequency b) Current
   c) Resistance d) Heat
9. Some electric drive runs through
   a) Capacitor
   b) Resistance
   c) Battery
   d) Inductance
10. _____ type of energy is used in electric trains.
    a) Wireless
    b) Direct coupling exchange
    c) Wire
    d) Remote control

Part–B (3 Mark)

Answer the questions in brief

1. What is an electric drive?
2. Define speed control methods.
3. What is called multi motor drive?
4. Define DC electric drive.
5. Define AC electric drive.
6. State Variable frequency drive.
7. What are the types of electric drives?

Part–C (5 Mark)

Answer the questions in one page

1. Explain the functions of individual electric drive.
2. Write about group drivewith block diagram.
3. Compare the DC and AC electric drives.

Part–D (10 Mark)

Answer the questions in two page

1. What are the advantages of electric drives, and how are they selected?
2. Explain the working principle of DC drive with suitable diagram.
3. Explain the working principle of AC drive with suitable diagram.



Reference Book

1. A text book of 'Electrical Technology' Volume-III B.L.Theraja and A.K.Theraja, S.Chand & Company Ltd.



Reference Internet Source

1. http://www.wikipedia.org
2. https://www.electrical4u.com



UNIT 07

Control Panel Board& PLC

LEARNING OBJECTIVE

To understand about Panel board, Busway in distribution system, Load centre, Electro mechanical system, Switch board construction and PLC.

TABLE OF CONTENTS

7.1 Introduction
7.2 Panel board- Definition
7.3 Busway in distribution system - Definition
7.4 Load centre – Definition
7.5 Electromechanical System
7.6 Switch board construction & its types
7.7 Programming logic controller
7.8 Conclusion

7.1 Introduction

The main panel is the heart of an electrical distribution system. Through its outgoing wires flows the lifeblood of the electricity used throughout the distribution system. The main service panel has several important functions:

- It serves as a distribution centre for all branch circuits.
- It houses all overcurrent devices that protect individual branch circuits.
- It houses a master switch that you can manually throw to cut off all outgoing electrical power from the service panel.
- The master switch also monitors the total amount of current the house uses and automatically cuts the power if it exceeds a specific amount.
- The main service panel has many sections, and each one performs a specific function. The three most important sections of the main panel are the main breaker, the hot bus, and the neutral/grounding bus.

7.2 Panel Board- Definition

Panel board is an important part of any electrical power distribution system. The panel board is a type for overcurrent protection devices, the busses and connections that provide power to those devices and their associated circuits.

Simply to say a panel board is

- Used to control light, heat, or power circuits
- Placed in a cabinet or cut-out box
- Mounted in or against a wall or support
- Accessible only from the front

7.2.1 Construction &Types

Panel board is a component of an electric power supply system. It divides electric power into sub-circuits with a separate fuse or circuit breaker provided for each circuit, in a common enclosure.

Panel boards are available in different sizes with variation in construction. They contain a can, interior, circuit protection devices, label and trim.

The "can" is constructed using galvanised steel, and houses other components. It is designed to provide component and personnel protection. Removable blank end panels allow the user to cut whatever conduit holes are necessary. Mounting studs are used to support the interior or group mounted devices. The can is shown in fig. 7.1.

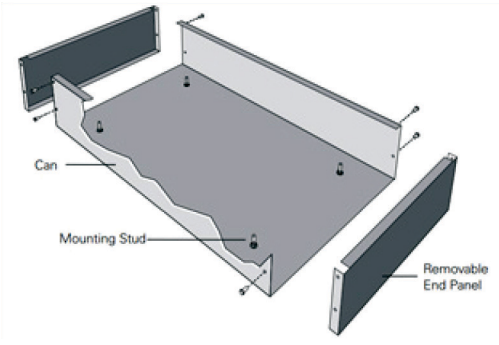

FIG 7.1 Can

The interior consists of several components, including overcurrent protection devices, bus bars and insulated neutral bus bars. A lighting panel interior is mounted to the four mounting studs in the can. Jacking screws (not shown) allow adjustment of the interior within the enclosure.

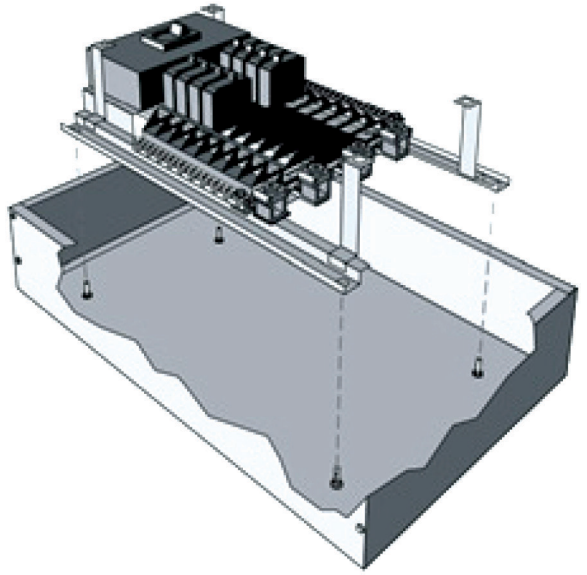

FIG 7.2

The "circuit protection device" is an electrical device used for preventing an unnecessary amount of current otherwise a short circuit. To ensure the highest security, there are many protection devices available in the market which offers you a total range of protection devices for circuits such as a fuse, circuit breakers, RCCB, gas discharge tubes, thyristors, and more.

The label identifies the panel board's type, voltage rating, and ampacity.

The dead front and trim are the front surfaces of the panel board that cover the interior. The trim includes an access door. These components provide access to the overcurrent devices while sealing off the bus bars and internal wiring from contact.



FIG. 7.3 (a) Fuse



FIG. 7.3 (b) Miniature circuit breaker

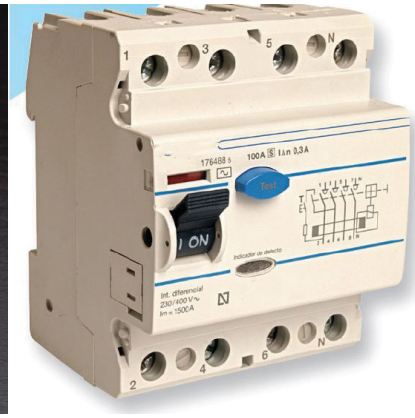

FIG. 7.3 (c) Earth leakage circuit breaker

Types of panel board

There are three types of panel board.

i. **Main breaker panel board**

The incoming supply cables of a main breaker type panel board are connected to the line inside of the main breaker, which, in turn feeds power to the panel board and its branch circuits. The main breaker disconnects power from the panel board and protects the system from short circuits, overloads, and ground faults.

ii. **Main lug only panel board**

A main lug only type panel board does not have a main circuit breaker. The incoming supply cables are connected directly to the bus bars. Primary overload protection for the panel board is not provided as an integral part of the panel board.

iii. **Main switch panel board**

The term switch refers to a fusible switch and main switch panel board refers to a power panel types only.

7.2.2 Testing of control panel

The electrical panel test also involves checking all the wiring and the signals to the relays and instruments, for the proper operation of the protection logic and the measuring reliability. The continuity and operation of the protection of the control circuits during the panel test is a key factor in the security.

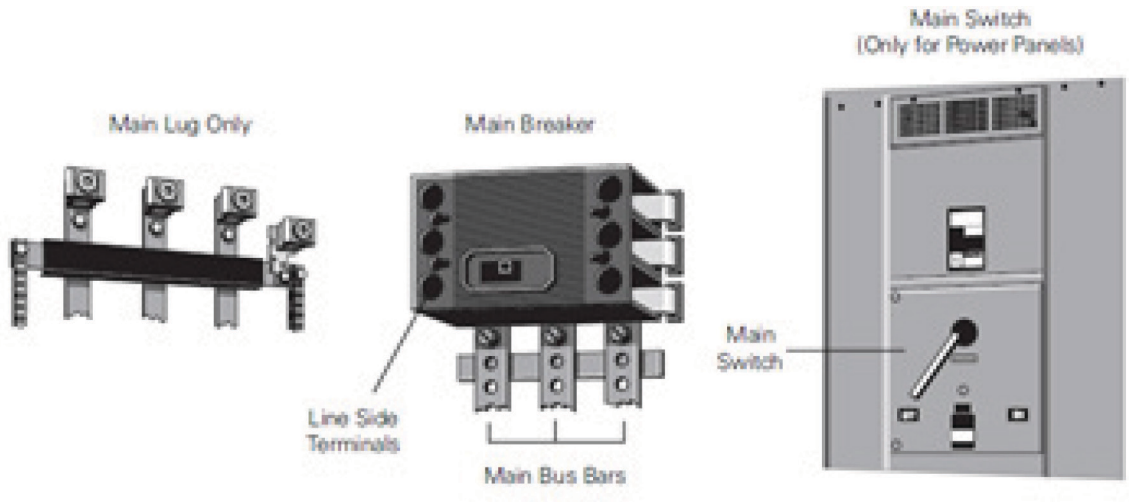

FIG. 7.4 Control panel board

1. **Relay tests**

   As a main protection element, the testing of the relay performance and settings is always included in any panel test; the different relay types, relay generation and specific protection functions will define the suitable relay test set.

2. **Secondary injection tests**

   The electrical panel test also involves checking all the wiring and signals to the relays and instruments, for the proper operation of the protection logic and the measuring reliability.

3. **Primary injection tests**

   Primary current injection testing is utilised in high current/high voltage scenarios found at large electrical installations such as substations. A large current (between 100A and 20,000A depending on system specifications and test requirements) is injected directly on the primary side of the electrical system such as a circuit breaker. The objective of the test is to identify how the system operates under various levels of current load.

4. **Polarity tests**

   A reversed polarity may cause the protection does not work or be unstable; the **raptor Polarity Tester** provides a more straightforward and efficient checking of the polarity in the panel test, with a special waveform generated by the raptor at the beginning of the circuit, which is comfortably traced downstream by the small handheld polarity tester.

7.3 Busway in distribution system - Definition

Busway is an excellent alternative to cable and conduit in commercial and industrial applications because it's not as complex to configure, less expensive to install and easier to replace, especially in applications where load locations are likely to change. Power is distributed using enclosed bus bars is referred as busway distribution system.



FIG. 7.5 Busway distribution system

7.3.1 Construction & Types

Busway is a prefabricated electrical distribution system that consists of bus bars in a protective enclosure (busway enclosure), including straight lengths, devices, fittings, and accessories.

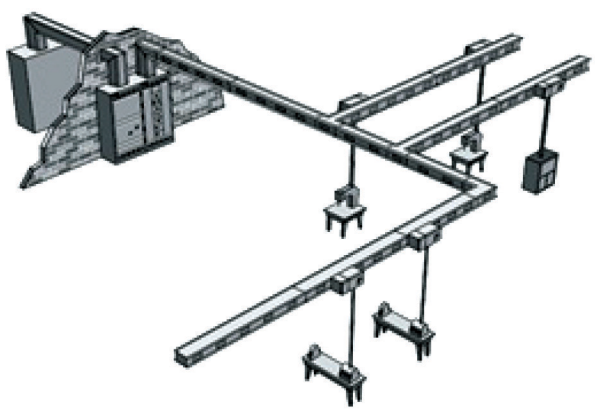

FIG. 7.6 Busbar

Busway and cable and conduit are often compared for several reasons. However, they both provide the same function, which is to deliver power between electrical equipment. The major difference is that busway uses less material since each piece is designed for a specific job and comes with a small cross-sectional area.

a) Non-segregated phase busway

These bus ducts have copper phase bars situated in an enclosure separated by air and epoxy insulation. The enclosure or housing materials tend to vary from steel, aluminium, and stainless steel. Its environmental ratings include outdoor, indoor, and dust tight. Non-segregated phase busway can provide both medium and low voltage solutions and is well suited for harsh environments.

b) Sandwich-style busway

These bus ducts have phase bars stacked together inside a non-ventilated steel or aluminium enclosure. You can use a sandwich-style busway to **deliver power** between gear with feeder pieces.

A plug-in busway, which is typically a busway with tap-off locations placed on it, is used to power equipment below the busway. Generally, a sandwich-style busway is a cost-efficient solution in different sectors since it can provide high ampacity with high short-circuit withstand ratings.

c) Track busway

The bus duct is a continuous rail design where tap-off boxes can be removed or installed almost anywhere along the bus ducts system. These boxes have fixed receptacles and cord whips that allow for distributing power to equipment under the busway.

d) Air-insulated busway

These bus ducts feature either aluminium or copper phase bars held in place with polymer support in an aluminium enclosure. It has plastic clips that keep the conductors isolated and spaced, guaranteeing air circulation.

7.3.2 Busway in distributed system

A major advantage of busway is the ease with which busway sections are connected. Electrical power can be supplied to any area of a building by connecting standard lengths of busway. It typically takes up to 35% fewer man-hours to install or change a busway system than cable and conduit assemblies.

Many power distribution systems use both busway and cable and conduit. Busway is used in a wide variety of applications, including complex industrial plants, data centres, offices, high-rise buildings and many other types of facilities.

Generally, there are two major types of busway installations: horizontal and vertical.

Horizontal busway is often used in industrial locations to supply power to heavy equipment, lighting, and air conditioning.

Vertical busway, also referred to as busway risers, can be installed economically in high-rise buildings where it is used to distribute lighting and air conditioning loads.

7.3.3 Components used in Busway system

Busway components include:

Bus bars, or conductors, conduct electricity; they are made from aluminium or copper and vary in size. In electric power distribution, a busbar is a metallic strip or bar, typically housed inside switchgear, panel boards, and busway enclosures for local high current power distribution.

- Housing, an aluminium or steel enclosure to contain the busbars
- Insulating system made of a combination of air, epoxy and mylar; it separates the conductors from each other to prevent electrical faults
- Fittings such as elbows, offsets and tees help to properly route busway from one electrical connection or termination

7.4 Load centre – Definition

In an electrical distribution system, 'load' means the appliance which consumes electric power and 'centre' means the point from where an activity or process is directed. The power is then distributed by a load centre to various branch circuits for lighting, appliances, and electrical outlets.

7.4.1 Construction

Load centres are constructed of the following three parts: enclosure, interior, and trim.

The enclosure is typically constructed of cold rolled steel (for indoor use) or galvanized steel (for outdoor use).

The load centre interior mounts inside the enclosure and includes bus bars and related hardware.

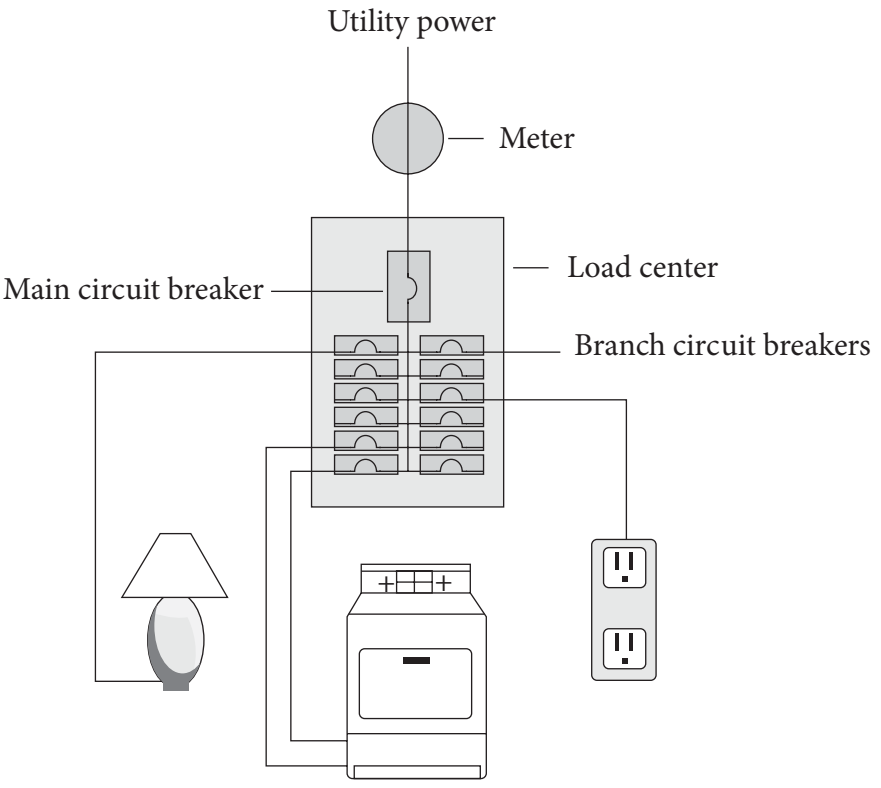

FIG. 7.7 Load centre

The trim assembly, sometimes called a dead front, attaches to the front of the load centre and covers the interior. The trim assembly includes an access door and an adjustable upper pan. The trim assembly provides access to the circuit breakers while sealing off live parts and internal wiring.

Together with the trim, the enclosure is designed to provide component and personnel protection.

7.4.2 Types

There are two types of load centres, main breaker type, and main lug type

a) Main breaker load centres

Main breaker load centres are suitable for use in service entrance applications. The incoming supply cables of the main breaker type load centre are connected to the main breaker which in turn feeds power to the load centre and its branch circuits. The main breaker disconnects power from the load centre and provides overcurrent protection.

b) Main lug-type load centre

A main lug-type load centre does not have a main circuit breaker. The incoming supply cables are connected directly to the main lugs and bus bars. Primary overload protection for the load centre is not provided as an integral part of the load centre. Main lug units are primarily used as a distribution panel where there is a main breaker upstream in the system.

7.4.3 Rating

Load centres are also limited to 240 V or less and typically are provided at 100 A or less, with a maximum current rating of up to 400 A. Panel boards can be applied at up to 600V and with a maximum current rating of 1,200 A. Load centres are typically offered with no or minimal options where panel boards can be provided with various optional features including main and branch circuit energy monitoring, and integrated surge suppression devices.

7.4.4 Service entrance in load centre

Sometimes panel boards are used as service entrance equipment for a building. This is the equipment located near where the power enters the building. The incoming power is connected to this equipment which provides a means to control and cut off the supply.

7.5 Electromechanical System

Electromechanical systems, sometimes referred as mechatronics, and it is a new and rapidly growing field that integrates electrical, electronics, mechanics, pneumatic, hydraulics, & computer control systems to create new & improved automated manufacturing production systems.

7.5.1 Components of Electromechanical assembly

The term “electromechanical assembly” can refer to anything from wire and cable subassemblies to full system assemblies known as box builds. In all of them, electrical and mechanical components and sub assemblies work as a unit to perform a mechanical operation.

7.5.2 Types of assembly

a) Switch and sensor assemblies

Two essential elements of electronic systems are switch assemblies and sensor assemblies, which differ in the function they provide and the components used in their construction.

Switch assemblies are typically used to connect or disconnect a power supply to electrical components, while sensor assemblies are designed to convert stimuli, such as sound, heat, light, or motion, into electrical signals.

Switch assemblies generally consist of the following components:

- Contacts for controlling the flow of electrical current to the switch
- Wiring harness for holding the switch in place and providing a site for electricity to enter or exit the switch body
- Switching mechanism—usually a toggle device or pushbutton—for controlling the operation of the device

While sensor assemblies typically include:

- Sensing elements for detecting physical properties (temperature, pressure, radiation, etc.), motion, or proximity
- Housings for protecting the sensing elements
- Transmitters for transmitting the data gathered about the targeted property
- Connection heads for allowing the connection of the sensor wires to the transmitter

b) Panel assemblies

Some electromechanical assemblies are integrated into panels. They typically serve as a method of controlling the distribution of electrical power into connected circuits. The process of creating these assemblies can involve:

- Positioning each component in the correct location on the back panel
- Punching or sawing holes for components
- Drilling holes for mounting hardware
- Wiring the panel

c) Power supply assemblies

A power supply provides electrical power to at least one electric load by converting a current to the correct format and voltage required to power it. Power supplies can be designed as either standalone devices or incorporated into appliances. General components of a power supply assembly include:

- Housing for protecting the other components
- Transformer for modifying the incoming voltage
- Rectifier for converting incoming power from AC to DC
- Filter for smoothing out waves in the DC output after rectification
- Regulator for reducing ripple voltages left by the filter

d) Transformer assemblies

Transformers are designed to transfer electrical energy between two or more electrical circuits. They work by increasing or decreasing the voltage level according to the requirements of the application.

Transformer assemblies generally include:

- Laminated core
- Primary and secondary windings

- Insulating materials
- Application-specific tanks and accessories (oil conservator, breather, cooling tubes, etc.)

7.5.3 Wiring instruction & guidance for assembly

Wiring industrial control panels is a complex process and it needs a number of carefully planned details. There are some general points that should be taken into account when wiring the control panel.

1. Connections should be **secured against accidental loosening**. Correctly tighten terminal screws and where a connecting plug is fitted, use the clamps or screws provided to secure it to its mating socket.
2. Particular attention in this respect should be taken with for protecting bond circuit, for example by using star washers and a lock nut where necessary.
3. Two or more conductors may only be connected to a terminal that is designed for the purpose.
4. Add an additional terminal and connect it to the other by a link laid in the cable trucking to gain an extra connection point.
5. Soldered connections should be made only to terminals suitable for that purpose only.
6. Ensure that identification tags and cable markers are legible, marked with a permanent ink and suitable for the environment where the panel is to be used.

7.5.4 Process of panel assembly

Some electromechanical assemblies are integrated into panels. They typically serve as a method of controlling the distribution of electrical power into connected circuits. The process of creating these assemblies can involve:

- Positioning each component in the correct location on the back panel
- Punching or sawing holes for components
- Drilling holes for mounting hardware
- Wiring the panel

7.6 Switch board construction & its types

A group of panels, load centres, etc., called a switchboard are used in substations, buildings, organisations, institutes, etc. A switchboard is a large single panel, frame, or assembly of panels. Overcurrent device, switches, protective devices and buses aremounted on a switchboard. They are usually mounted on the front or back, or both. Switchboards are generally accessible from the rear as well as from the front.

There are several components that make up a switchboard. They consist of a frame, overcurrent protective devices, buses, instrumentation and outer covers.

a) Frame

The frame of a switchboard houses and supports the other components. A typical switchboard frame is 90 inches high and 38 inches wide. Optional heights of 70 inches and width of 32 inches and 46 inches are also available.

b) Bus

A bus is a conductor that serves as a common connection between two or more circuits. Buses are mounted within the frame. Horizontal buses are used to distribute power to each switchboard section. Vertical buses are used to distribute power via overcurrent devices to the load devices. Vertical and horizontal busbars are shown in fig. 6.5. Standard busbars on switchboards are made of aluminium, but copper busbars are available as an option.

c) Splice plates

Splice plates are used to join the horizontal busbars and adjoining switchboard sections. The horizontal busbar is pre-drilled to accept the splice plates,

d) Protective devices

Operator components are mounted on the front side of the switchboard. This includes protective devices, such as circuit breaker, disconnect switches, meters and fuses, which can be covered by a trim panel.

e) Service section

A typical switchboard consists of a service section also referred to as the main section, and one or more distribution sections. The service section can be fed directly from the utility transformer. In addition to the main disconnect, the service section usually contains utility or customer metering provisions.

7.7 Programming logic controller

Nowadays, advanced technology is used for controlling the equipment and electricity is the resource for running most of the household equipment's which uses relays. This relay makes the simple logical control decision. The development of low-cost computer has brought the most recent revolution, the Programmable Logic Controller (PLC). The advent of PLC began in the 1970s, and has become the most common choice for manufacturing controls.



FIG. 7.8 Programming logic controller

- Programmable means 'able to provide coded instructions for the automatic performance of a task'.
- Logic means 'a system or set of principles underlying the arrangements of elements in a computer or electronic device so as to perform a specified task'.
- Controller means 'a thing that directs or regulates something'.

Hence, PLC is a set of instructions in an electronic device that help perform the regulatory task. PLC is an industrial computer that contains hardware and software used to perform control functions. PLC is used for automation of industrial processes to control machinery placed on assembly lines of manufacturing units, and food processing.

Some of the additional advantages of PLCs are as follows:

- Smaller physical size than hard-wire solutions.
- Easier and faster to make changes.
- PLCs have integrated diagnostics and override functions.
- Diagnostics are centrally available.
- Applications can be immediately documented.
- Applications can be duplicated faster and less expensively.

7.7.1 PLC Architecture & wiring

A PLC consists of two basic sections, input/output (I/O) interface system, and central processing unit (CPU).Input and output are the physical interface between a processing unit and user.

PLC's consists of **Input and output modules (I/O),** a **Power supply, Programming device** and a **Central Processing Unit (CPU).** The CPU also has memory for logic functions and data tables for I/O storage and will be covered later.

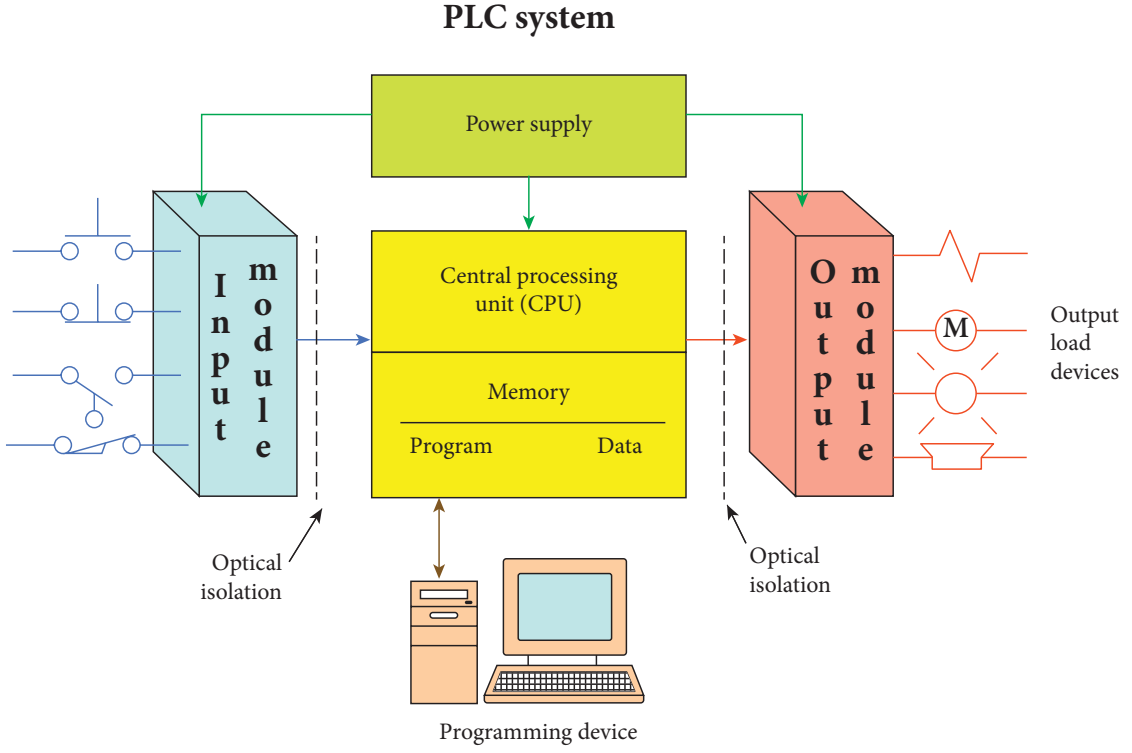

FIG. 7.9 PLC Architecture & wiring

a) Input and output modules

Inputs and outputs can be digital or analog depending on the field device needed. An input is a field device that updates the PLC on how the process is running. An input field device could be a pushbutton switch, pressure sensor, or photo sensor to name a few. An output is a command supplied by the CPU Logic to control an output field device. These field devices may include, relays, timers, motor starters, lights, counters or displays. The output command is driven by the updated input tables, the CPU logic, and a signal sent to the output field device to be controlled.

b) Power supply

The power supply provides different voltage sources that are required for the different field devices, CPU, and internal memory operations.

c) Programming device

Programming devices are a way for the programmer to write and load the program. Programming devices may also be used to monitor the I/O and the process in real time and for trouble shooting when the process doesn't function correctly.

d) Central Processing Unit (CPU)

The central processing unit provides all the logic functions as well as directing communication flow with other components; both internal and external. It is the "brain" of the PLC. Internally, the CPU provides data space to store the program instructions. It also performs math, counting and timing functions based on the program logic. Externally, the CPU updates the input file status from field devices and executes the appropriate output function.

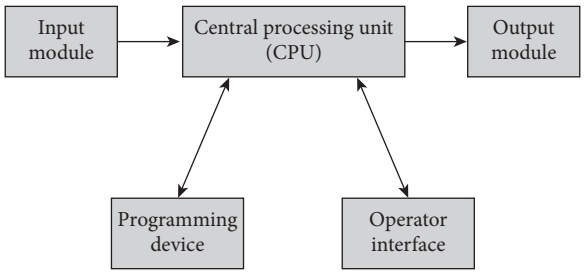

FIG. 7.10

In programmable logic controller, electronic components are used. These electronic components work on digital signal. This digital code, such as '101101010', is not understood by a human. In such a condition, there is a gap between the machine and thehuman. To cover this gap, human machine interface is used. Human machine interfaceis user interface that connects an operator to the controller for an industrial system.There are three basic types of HMIs, pushbutton replacer, data handler and overseer.

7.7.2 Human Machine Interface (HMI)

A Human-Machine Interface (HMI) is a user interface or dashboard that connects a person to a machine, system, or device. While the term can technically be applied to any screen that allows a user to interact with a device, HMI is most commonly used in the context of an industrial process.

In industrial settings, HMIs can be used to:

- Visually display data
- Track production time, trends, and tags
- Oversee KPIs
- Monitor machine inputs and outputs

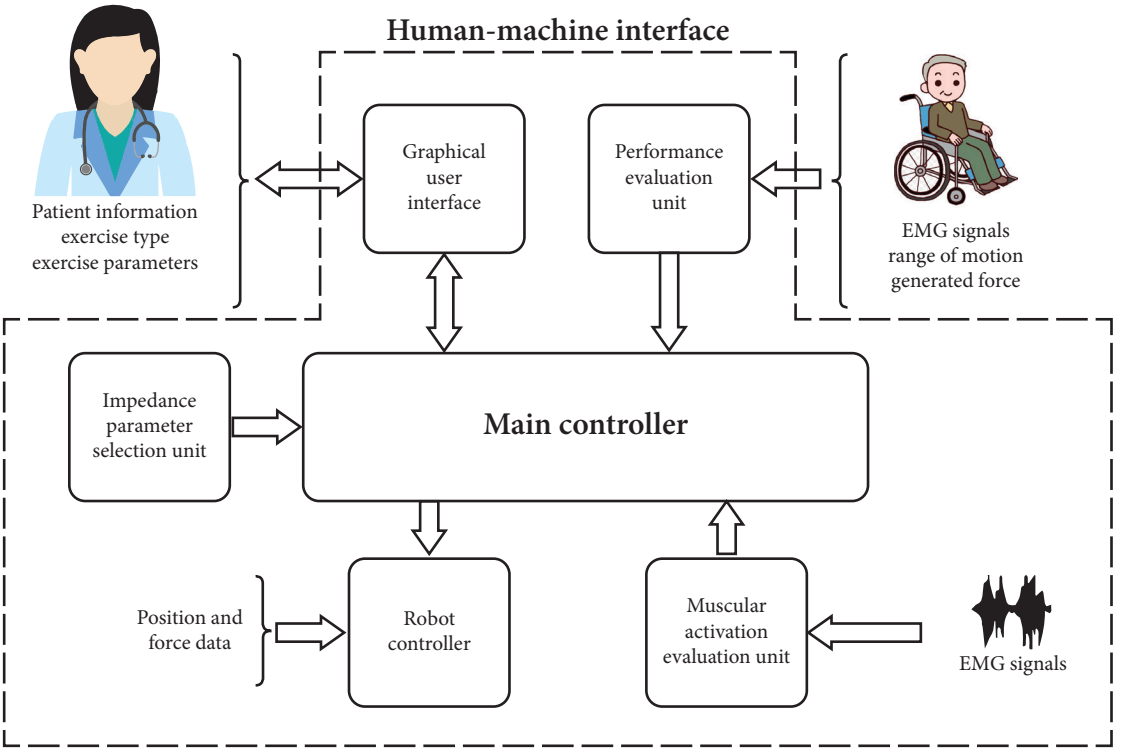

FIG. 7.11 Human Machine Interface HMI

HMI technology is used by almost all industrial organizations, as well as a wide range of other companies, to interact with their machines and optimize their industrial processes.

7.7.3 HMI wiring

Wiring an HMI into a system may be an easy task if a PLC is already integrated. This connection is as simple as connecting a USB/RS-232/RS-485 cable between the HMI and PLC. In some instances, both units are equipped with wireless features, making the connection even easier. Although the wiring between the PLC and HMI may be an easy task, the wiring between the PLC and the actual automation line could prove more difficult. Depending on the size and complexity of the application, PROFIBUS extensions may be required for the PLC. A PROFIBUS extension is similar to a power strip that extends one input/output to multiple input/outputs by connecting to the expansion port of the PLC. A wiring schematic from the production line to the PLC is highly recommended, making programming the HMI significantly faster.

7.8 Conclusion

Students will gain knowledge about Panel board, Busway in distribution system, Load centre, Electro mechanical system, Switch board construction and PLC.

Activities

1. Prepare a sketch of panel board existing in your school laboratory
2. Draw the assembling flow chart of a computer

Glossary

Control panel	கட்டுப்பாட்டு பலகை
Load centre	மின்பளு மையம்
Splice plate	பிளவுத்தட்டு
Central processing unit	மைய செயலாக்கும் பிரிவு

Evaluation

PART- A **(1 Mark)**

Choose the correct answer

1. For electrical power distribution system ---------- is an important part.
   a. Panel board
   b. Switch
   c. Control switch
   d. Power circuit
2. Panel board divides electric power into sub circuits with a separate ----------
   a. Relay b. Circuit breaker
   c. Switch d. Device
3. In parallel board, the can is made of ----------
   a. Steel
   b. Copper
   c. Galvanised steel
   d. Aluminium
4. Jacking screws are provided in the interior for ----------
   a. Tightening
   b. Loosening
   c. Fitting
   d. Adjustment
5. To prevent short circuit ---------- is used in the panel board.
   a. Circuit protection device
   b. Interior
   c. Can
   d. Label
6. To identify the panel board's type and voltage rating ---------- is used.
   a. Trim
   b. Label
   c. Interior
   d. Can
7. The ---------- are the front surfaces of the panel board that cover the interior.
   a. Label
   b. Interior
   c. Dead front and trim
   d. Can
8. Primary injection testing is utilized in ----------
   a. Residence
   b. Factories
   c. Commercial buildings
   d. Sub-stations

9. The current rating injected on the primary side of the electrical system is ----------

a. 100 A to 20000A

b. 100 A to 2000 A

c. 100 A to 200 A

d. 100 A to 1000 A

10. The object of primary injection test is to identify how the system operates under various levels of ----------

a. Potential load

b. Current load

c. Resistive load

d. Inductive load

11. The prefabricated electrical distribution system is called ----------

a. Transformer

b. Bus way

c. Megger

d. Fuse

12. Generally bus way installation consists of ---------- types.

a. Five b. Four

c. Three d. Two

13. To supply power to heavy equipment, lighting and air conditioning ---------- type of bus way is used.

a. Vertical

b. Inclined

c. Horizontal

d. Parallel

14. Bus bar conductors are made of ----------

a. Iron b. Zinc

c. Lead d. Copper

15. In an electrical distribution system, load means ----------

a. Appliance which consumes electric power

b. Current

c. Current

d. Total value of resistance

16. In an electrical distribution system, centre means ----------

a. Working area

b. Point from where an activity or process is directed

c. Generating stations

d. Distributing area

17. Load centre is of ---------- types.

a. Six b. Four

c. Two d. Eight

18. Electromechanical system is referred as ----------

a. Pneumatic

b. Computer control system

c. Technotronics

d. Mechatronics

19. Two essential elements of electronic systems are switch assembly and ----------

a. Sensor assembly

b. Mechanical assembly

c. Contact assembly

d. Transmitter

20. The expansion of PLC is ----------

a. Progressive Logic Controller

b. Protected Logic Controller

c. Programming Logic Controller

d. Prevented Logic Controller

Part–B (3 Mark)

Answer the questions in brief

1. Define – Panel board.
2. Write about 'Circuit protection device'.
3. List out the types of Panel board.
4. What is called Track bus way?
5. What is meant by Air insulated bus way?
6. What are the components used in bus way system?
7. Define – Load centre.
8. What is called Electro-mechanical system?
9. Write about programming device.
10. Define – Control Processing Unit (CPU).
11. Write about HMI – wiring.

Part–C (5 Mark)

Answer the questions in one page

1. Write about the list of Panel board.
2. Briefly explain the various tests adopted in Bus way system.
3. Write about the components used in Bus way system.
4. Draw the diagram of PLC system and label its parts.
5. Draw the schematic diagram of HMI wiring.
6. What are the general points that should be taken into account when wiring the control panel?

Part–D (10 Mark)

Answer the questions in two page

1. Explain the construction and types of Control panel board with a neat sketch.
2. Explain the construction and types of Load centre with a suitable diagram.
3. Explain briefly about the types of assembly in Electro-mechanical system.



Reference Book

1. A text book of 'Electrical Technology' Volume-III B.L.Theraja and A.K.Theraja, S.Chand & Company Ltd.



Reference Internet Source

1. http://www.wikipedia.org
2. https://www.electrical4u.com



UNIT 08

DC and AC Windings

LEARNING OBJECTIVE

Winding is the heart for motors and generators. It is important to keep the windings in good condition for the good operation of the electrical machines used in domestic and industries. It is required to gain knowledge to study about motors and generator operation for its operation. The students if they trained properly, they can exhibit their potential in motor rewinding in electrical platform.

TABLE OF CONTENTS

8.1 Introduction
8.2 Winding materials
8.3 Winding parameter
8.4 DC winding
8.5 AC winding
8.6 Conclusion

8.1 Introduction

Windings are used in motors, generators, transformers, loud speakers and in all measuring instruments. The main objective of a winding is to produce the magnetic field according to the rating of the electrical machine. In this unit, we have to gain theoretical experience about the materials needed for windings and the types of DC and AC windings.

8.2 Winding materials

Generally two types of materials used in winding motors and generators. They are,

i. Electric conductors
ii. Electrical insulating materials.

i. Electric conductors

Materials having low resistance metals which allow an electric supply to the conductors are called electric conductors.

Copper and Aluminium are the conductors mostly used as for winding.

a. Types of conductors

The types of conductors used are

i. Cotton covered winding wires.

ii. Silk covered winding wires.

iii. Paper covered winding wires.

iv. Varnished glass paper covered winding wires.

v. Enamel coated round shaped winding wires.

Enamel coated round wires are mainly used in small and medium type of motors having semi-closed slots while rectangular conductors are used in larger types of motors having open type slots.

ii. Electric insulating materials

Materials having the property of high resistance which not to permit the electric supply are called insulating materials.

Ex: Mica, wood, glass, varnish

8.2.1 SWG (Standard Wire Gauge) plate

a. Method of representing the size of the winding wires

The size of the conductors may be notified in two ways as follows:

i. By SWG numbers – a steel "SWG plate" is used

ii. By its diameter in millimetre – Micrometer instrument Screw gauge is used.

b. To Find gauge number of a conductor with SWG plate

The sizes and the gauge of the wires can be found by a device called SWG plate. It consists of a circular steel plate having notches of different widths around their edges. The diameter of the plate is of 3 ¾ inches (95mm) with thirty six notches. Each notch is marked with a number. The size of the conductor found is inserted into the notches. The wire which just fits with a particular notch stated to be the exact gauge of the wire. The number represented near that notch will be the gauge number of that wire.

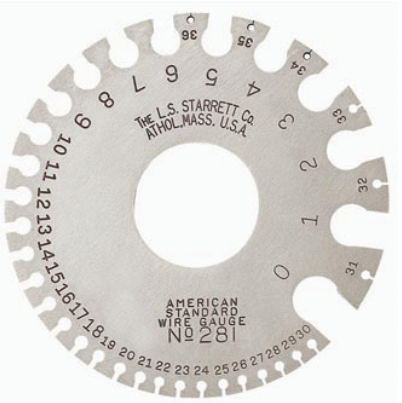

FIG. 8.1 Standard wire gauge plate

By finding gauge of a wire, we can determine the amount of electric current the wire can carry as well as its electrical resistance and weight per unit length.

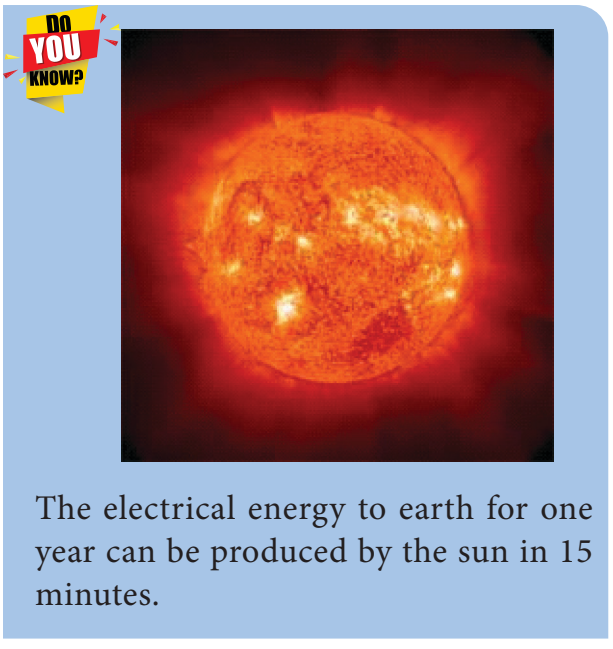

The electrical energy to earth for one year can be produced by the sun in 15 minutes.

We can measure the diameter of the winding coil by using screw gauge. After measuring the diameter of the wire, using the above instrument, we can find the gauge number of the wire from the following table given below.

S.W.G No	Standard wire gauge SWG			SWG No	Standard wire gauge SWG		
	Inch	mm	Area mm^2		Inch	mm	Area mm^2
0	0.324	8.23	53.17	26	0.018	0.457	0.164
1	0.3	7.62	45.6	27	0.016	0.417	0.136
2	0.276	7.01	38.6	28	0.015	0.376	0.111
3	0.252	6.401	32.2	29	0.014	0.345	0.0937
4	0.232	5.893	27.3	30	0.012	0.315	0.0779
5	0.212	5.385	22.8	31	0.012	0.295	0.0682
6	0.192	4.877	18.7	32	0.011	0.274	0.0591
7	0.176	4.47	15.7	33	0.01	0.254	0.0507
8	0.16	4.064	13	34	0.009	0.234	0.0429
9	0.144	3.658	10.6	35	0.008	0.213	0.0357
10	0.128	3.251	8.3	36	0.008	0.193	0.0293
11	0.116	2.946	6.82	37	0.007	0.173	0.0234
12	0.104	2.642	5.48	38	0.006	0.152	0.0182
13	0.092	2.337	4.29	39	0.005	0.132	0.0137
14	0.08	2.032	3.24	40	0.005	0.122	0.0117
15	0.072	1.829	2.63	41	0.004	0.112	0.0098
16	0.0064	1.626	2.07	42	0.004	0.102	0.0082
17	0.056	1.422	1.59	43	0.004	0.091	0.0065
18	0.048	1.219	1.17	44	0.003	0.081	0.0636
19	0.04	1.016	0.811	45	0.003	0.071	0.0557
20	0.036	0.914	0.657	46	0.002	0.061	0.0479
21	0.032	0.813	0.519	47	0.002	0.051	0.04
22	0.028	0.711	0.397	48	0.002	0.041	0.0322
23	0.024	0.61	0.292	49	0.001	0.03	0.0236
24	0.022	0.559	0.245	50	0.001	0.025	0.0196
25	0.02	0.508	0.203	BASIS: IS 13730-0-1/IEC 317-0-1			

8.3 Winding parameter

There are various factors that decide the output of any rotating electrical machines. Out of these parameters such as inductance, insulation strength and strength of the magnetic field greatly influence the design of coil windings. Coil winding can be structured into various type and the method of wounding the coil.

8.3.1 Coils

A coil consists of a single turn or it may consist of many turns connected in series. Each coil having two coil sides as shown in the fig. 8.2.

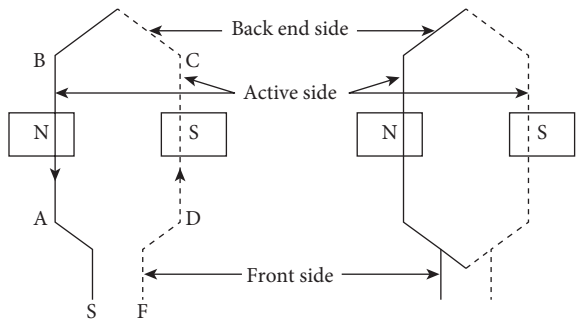

FIG. 8.2 Winding coil representation

8.3.2 Active side of a coil

A part of the coil placed in the slots is called as active side. Magnetic field or EMF is induced in this part and hence it is called as active side of the coil.

8.3.3 Inactive side of a coil

The part of the coil which comes out from the slots of a motor is called as inactive side. Here no magnetic field and emf is induced and hence it is called as inactive side of the coil. It is also called as "overhang" part of the coil.

8.3.4 Winding

Winding is made up of many coils with proper connections between them.

8.3.5 Winding diagram

The diagram which describes the type of winding, coil group and its connection, etc. related with winding is called winding diagram.

8.4 DC winding

In DC machines, the drum type armature windings are used. In this, the armature conductors are placed in the slots around the surface of cylindrical or drum shaped armature core. DC machines consists of two windings, namely

i. Field winding placed in main poles.

ii. Armature winding placed in armature.

8.4.1 Types of winding in armatures

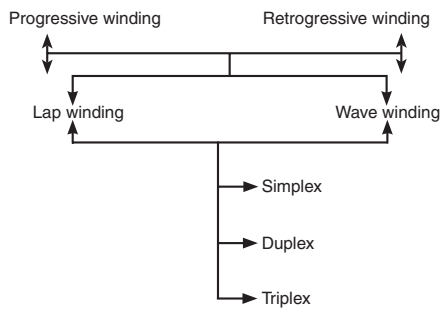

8.4.2 Progressive winding

In progressive winding, finishing end of a coil is connected to the starting end of a coil which is placed in the right side of the starting point as shown in the fig. 8.3.

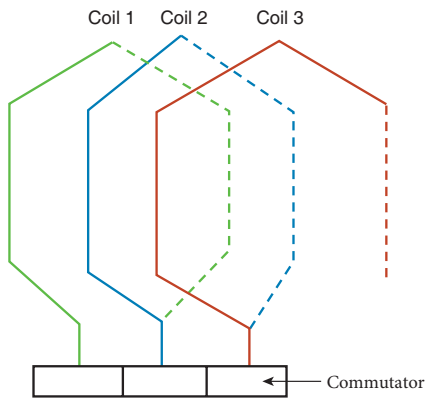

FIG. 8.3 Progressive lap winding

8.4.3 Retrogressive winding

In Retrogressive winding, finishing end of a coil is connected to the starting end of a coil which is placed in the left side of the starting point as shown in the fig. 8.4.

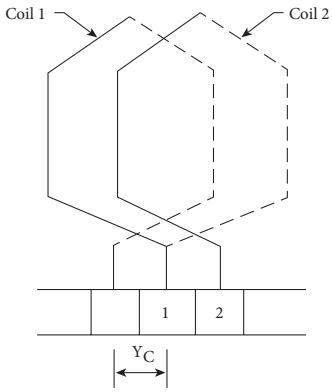

FIG. 8.4 Retrogressive winding

8.4.4 Lap winding

As shown in the fig. 8.5, winding in which successive coils arranged in the manner that they overlap each other is called Lap winding.

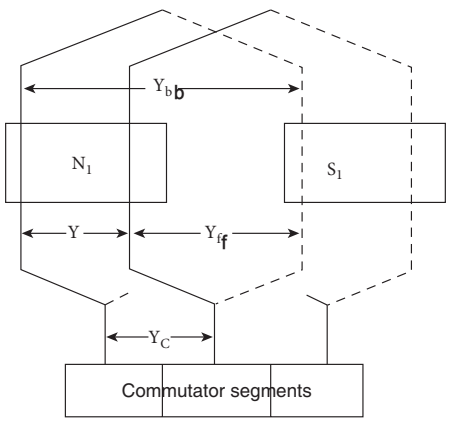

FIG. 8.5 Lap winding

8.4.5 Wave winding

As shown in the fig. 8.6, winding in which successive coils arranged in the manner that it does not overlap each other and it forms like a waveform and hence it is called wave winding.

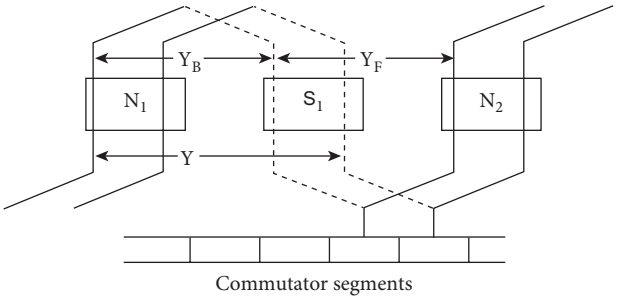

FIG. 8.6 Wave winding

8.4.6 Simplex lap winding

In simplex lap winding, finishing end of the first coil is connected with the starting end of the adjacent coil as shown in the fig. 8.7.

Here, only one circuit is available.

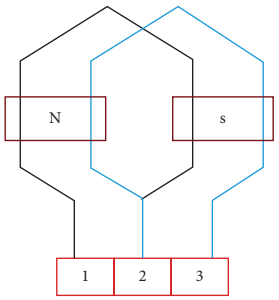

FIG. 8.7 Simplex lap winding

8.4.7 Duplex lap winding

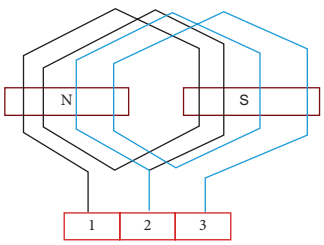

FIG. 8.8 Duplex lap winding

In duplex lap winding, finishing end of the first coil is connected with the starting end of the third coil as shown in the fig. 8.8. There are two separated circuits in duplex windings.

Coils for the 1st circuit - 1, 3, 5, 7,.....

Coils for the 2nd circuits - 2, 4, 6, 8, ...

8.4.8 Back pitch (Y_b)

The distance between two coil sides of a coil is referred to as back pitch. It is always an odd number.

8.4.9 Winding pitch (or) coil pitch (y)

The distance between two starting leads of successive coils is referred to as winding pitch or coil pitch. It should be always an even number.

8.4.10 Front pitch (Y_f)

It is the distance between two coil sides connected to the same commutator segment. It should be an odd number.

8.4.11 Necessary details needed for DC winding

i. First calculate the number of coils. The number of coils must be equal to the number of commutator segments.

ii. According to the formula concerned to the lap or wave winding, calculate the back pitch (Y_b) coil pitch (Y), and the front pitch (Y_f)

iii. Back pitch and front pitch must be of odd number only and the coil pitch must be of even number.

iv. Formula for lap winding

$$\text{Back pitch, } Y_b = \frac{2C}{P} \pm K$$

Here, C – number of coils

P – number of poles

K–whole number a decimal or a fraction needed for making back pitch as an odd number.

Coil pitch, Y = ± 2m

m = 1 for simplex winding

m = 2 for duplex winding

Here '+' symbols denotes the progressive winding while '-' sign denotes the retrogressive winding. Generally all machines are winded by progressive method and hence we are using this type of winding methods in this lesson.

Front pitch, $Y_f = Y_b - Y$

v. Formula for wave winding

$$\text{Back pitch, } Y_b = \frac{2C}{P} \pm K$$

Here 'C' denotes the number of coils and 'P' denotes the number of poles and 'K' may be a whole number or a decimal or a fraction needed for making back pitch as an odd number.

$$\text{Coil pitch, } Y = \frac{2C \pm 2m}{P/2}$$

Here, m = 1 (for simplex)

m = 2 (for duplex)

Front pitch, $Y_f = Y - Y_b$

In wave winding, back pitch and front pitch must be equal.

Hence, $Y_b = Y_f$

vi. In double layer windings, the top layer coils should be numbered by odd numbers and the bottom layer should be numbered by even numbers.

vii. To find the direction of current, use Fleming's right hand rule for generators and use Fleming's left hand rule for motors.

viii. The number of brushes must be equal to the number of parallel paths. For lap winding, the number of parallel paths will be equal to the number of poles and for wave winding, the number of parallel paths should be equal to 2

For lap winding,

Number of brushes = number of poles

For wave winding,

Number of brushes = 2

ix. Mark positive brush connected lead as 'A ' and negative brush connected lead as "AA "

These two leads will be the armature leads of the DC machine.

x. Draw solid vertical lines of equal length for the top layer coil sides and draw dotted vertical lines of same length for the bottom layer coil sides.

8.4.12 Double layer simplex Lap winding diagram

Draw the double layer simplex lap winding diagram for a 2 poles, 6 slots DC machine having 6 commutator segments. Indicate the position of brushes.

Solution

Number of poles P = 2

Number of slots S = 6

Number of commutator segments = 6

We know,

No. of coils C = No. of commutator segments

Hence, C = 6

Back pitch, $Y_b = \frac{2C}{P} \pm K$

$= \frac{2X6}{2} \pm K$

= 6 + 1 = 7 (or) 6-1 = 5

Coil pitch, Y = ±2m

m = 1 (for simplex)

Then, Y= 2 X 1 =2

Front pitch, $Y_f = Y_b - Y$

= 7 – 2 = 5 (or)

5 - 2 = 3

Selected Y_b and Y_f are

$Y_b = 7$

$Y_f = 5$

Winding table

S. No.	$Y_b = 7$	$Y_f = 5$
1	1	8
2	3	10
3	5	12
4	7	14(2)
5	9	16(4)
6	11	18(6)

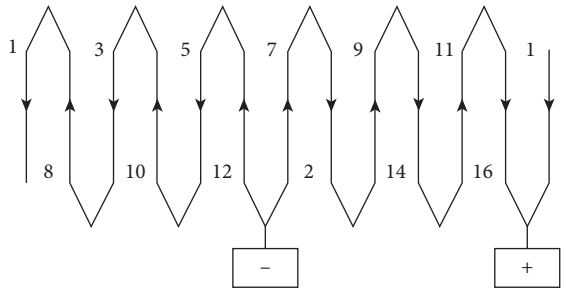

FIG. 8.9 Winding-commutator connection

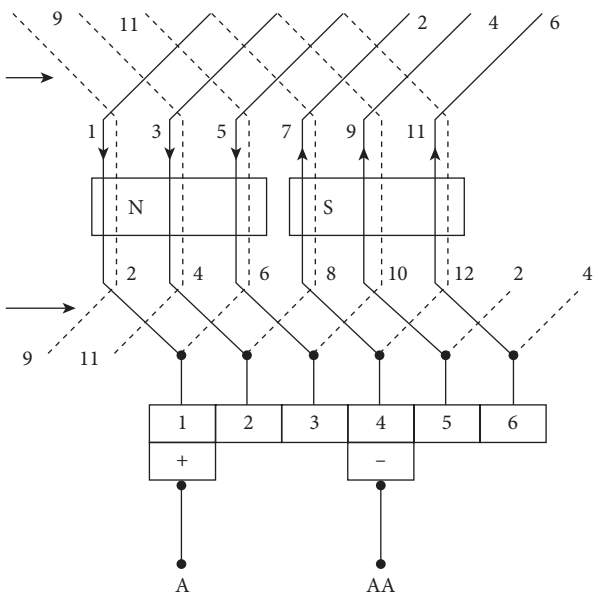

FIG. 8.10 2 Poles 6 slot simplex lap winding diagram

The winding of DC machines starts from the first coil side and finally ended with the same and hence the DC machines windings are generally called as "closed coil winding".

In making winding table for lap winding, it is important that we must add back pitch to obtain back end side and subtract front pitch to obtain front end side.

8.4.13 Double layer simplex wave winding diagram

Develop a double layer simplex wave winding diagram for a 2 poles, 6 slots, DC machine having 6 commutator segments. Indicate the position of brushes.

Solution

Number of poles P = 2

Number of slots S = 6

Number of commutator segments = 6

We know

No. of coils C = No. of commutator segments

Hence C = 6

Back pitch $Y_b = \frac{2C}{P} \pm K$

$= \frac{2 \times 6}{2} \times K$

(or)

6-1 = 5

Coil pitch $Y = \frac{2C \pm 2m}{P/2}$

m = 1 (for simplex)

Then $Y = \frac{2 \times 6 \pm 2 \times 1}{2/2}$

$= 12 \pm 2$

$= 12 + 2 = 14$ (or)

$12 - 2 = 10$

Front pitch $Y_f = Y - Y_b$

Also $Y_f = Y_b$

So $Y_f = 14 - 7 = 7$ (or)

$10 - 5 = 5$

Selected Y_b and Y_f are

$Y_b = Y_f = 7$ (or)

$(Y_f = Y_f = 5)$

Winding table ($Y_b = Y_f = 5$)

Sl. No.	$Y_b = 5$	$Y_f = 5$
1	1 – 6	6 – 11
2	11 – 4	4 – 9
3	9 – 2	2 – 7
4	7 – 12	12 – 5
5	5 – 10	10 – 3
6	3 – 8	8 – 1

In preparing winding table for wave winding, it is important that we must add back pitch and front pitch to obtain back end side and front end side respectively.

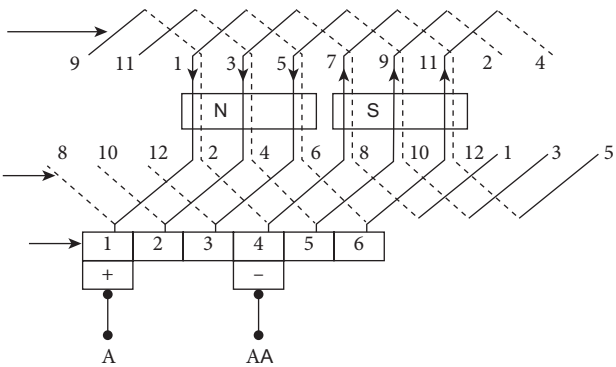

FIG. 8.11 2 Poles 6 slots simplex wave winding

8.5 AC winding

The AC winding of a machine is defined as an arrangement of conductors design to produce an emf by relative motion in a

magnetic field. Electrical machines employ groups of conductors distributed in slots over the periphery of the armature. The group of conductors are connected in various type of series-parallel combination to form armature winding. The conductors are connected in series so as to increase the voltage rating. If the conductors are connected in parallel the current rating will be increased. In general, the winding connected with AC machines are called AC windings.

8.5.1 Types of AC windings

Generally three types of winding are in AC machines. They are

i. Lap winding
ii. Wave winding and
iii. Concentric winding

i. Lap winding

Lap windings are generally used in low voltage and high current electrical machines.

ii. Wave winding

Wave windings are used in high voltage and low current electrical machines.

iii. Concentric winding

The centre of all the coils in a coil group confined to a constant centre as shown in the figure 8.12 is called concentric winding.

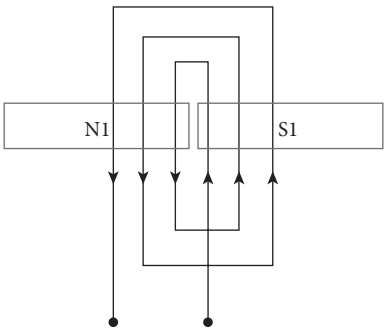

FIG. 8.12 Concentric winding

1. Coil group

One coil or more than one coil connected in series are called coil group. When preparing AC winding calculation, the number of coils per pole should also be calculated. Then the coils in the pole should be separated for three phases also. Thus the coils per pole per phase are made into a coil group. By making coil groups, the number of end connections can be reduced and hence we can prevent short circuits in the end connection areas.

2. Pole pitch

It is the distance between the centre of two adjacent poles. It is also denoted by the number of slots per pole.

$$\text{Pole pitch} = \frac{number\ of\ slots}{number\ of\ poles}$$

3. Winding pitch or coil pitch or coil span

It is the distance between the two coil sides of a coil.

$$\text{Coil pitch} = 1 + \text{pole pitch}$$

4. Full pitched winding

In full pitched winding, pole pitch and coil pitch are equal. There will be 180° (electrical degree) between the coil sides.

5. Fractional pitched winding

If we reduce or increase the coil pitch by one or two in number than the pole pitch, then it is called as fractional pitched winding. The angle (electrical degree) between the coil sides may be less than or more than 180°.

Fractional pitched winding may be divided into two types. They are

i. Short pitched winding (or) short chorded winding

ii. Long chorded winding

6. Pitch factor (K_c)

It is the ratio between the coil pitch and pole pitch. It is denoted by 'K_c'.

$$\text{Pitch factor, } K_c = \frac{coil\ pitch}{pole\ pitch} = cos\frac{\alpha}{2}$$

7. Short pitched winding or short chorded winding

If we reduce the coil pitch by one or two in number than the pole pitch, then it is called as short pitched winding. The reducing value should not exceed $\frac{1}{3}$ of the pole pitch value. Electrical degree between two coil sides of short pitched winding will be less than 180°. This reduced angle is represented by short pitch angle (α). Here pitch factor will be less than one. This process reduces the weight of copper needed for winding the motors.

8. Long chorded winding

If we extend the coil pitch by one or two than the pole pitch, it is called as long chorded winding. Electrical degree between two coil sides of long chorded winding will be more than 180°. Here pitch factor will be more than one. This method of winding is rarely used.

9. Single layer winding

If each slot of a motor contains one activated coil, then it is called as single layer winding. Here the number of coils will be equal to the half of the total number of slots.

Hence,

$$\text{Number of coils} = \frac{\text{Total number of slots.}}{2}$$

10. Double layer winding

Two different sides of two activated coils are inserted in the same slot is called double layer winding. Here the number of coils are equal to the number of slots.

Hence,

Number of coils = Total number of slots

11. Balanced winding

If the number of coils in all coil groups per phase are equal, then this type of winding is referred to as balanced winding.

12. Unbalanced winding

If the number of coils in all coil groups per phase are unequal, it is called unbalanced winding.



Metal-Air batteries are small in size and have light weight batteries.

But its ranges are high. When not in use, they quickly disrupt.

Because metal electrodes are affected by corrosion.

13. Whole coil winding

If the number of coil groups per phase is equal to the number of poles, then the winding is called as whole coil winding. All the three phase lap windings and single phase concentric windings are belongs to this type.

14. Half coil winding

If the number of coil groups per phase is equal to the half of the number of poles, then the winding is called as half coil winding. This type of winding is used in three phase concentric winding.

15. Concentric winding

If all the conductors of one coil side are inserted in single slot for making one complete pole or if we place a single coil for making one complete pole, it is called as concentric winding.

Example:

Three phase half coil winding, field winding of DC & AC generators

16. Distributed winding

Here the coils for a pole should not be made as a single coil and hence the pole contains several coils and inserted in several slots. This type of winding is known as distributed winding. All the stators and rotor windings of AC machines and armature winding of DC machines followed this type of winding.

8.5.2 AC single phase concentric winding

A.C, 1ϕ, 4 poles, 24 slots concentric winding for a split phase capacitor type motor.

$$\text{Pole pitch} = \frac{\textit{Number of slots}}{\textit{Number of poles}}$$

$$= \frac{24}{4} \quad = 6$$

Coil pitch = 1 + pole pitch

= 1+6 = 7

=1-7 (full pitched)

1-6 (short pitched)

For single phase concentric winding, we choose pole pitch as short pitch.

$$\text{Total no. of coils (Single layer)} = \frac{\textit{No of slots}}{2}$$

$$= \frac{24}{2} = 12$$

$$\text{No. of coils per pole} = \frac{\textit{No of coils}}{\textit{No of poles}} \text{ (coils / pole)}$$

$$= \frac{12}{4} = 3$$

$$\text{No. of coils per phase} = \frac{\textit{No of coils}}{\textit{phases}} \text{ (coils / phase)}$$

$$= \frac{12}{1} = 12$$

No. of coils per pole per phase

$$= \frac{\textit{No of coils}}{\textit{poles} \times \textit{phases}} \text{ (coils / pole / phase)}$$

$$= \frac{12}{4 \times 1} \quad = \frac{12}{4} = 3$$

Total no. of coil groups = poles x phases

= 4 x 1 = 4

No. of coils per coil groups

$$= \frac{\textit{No of coils}}{\textit{No of coil groups}} \text{ (coils / coil group)}$$

$$= \frac{12}{4} = 3$$

Pole 1	Pole 2	Pole 3	Pole 4
3	3	3	3

K - calculation (No of slots for 90°)

Electrical degree for a slot

(or)

Electrical degree between adjacent slots

$$\beta = \frac{P \times 180^\circ}{S}$$

$$= \frac{4 \times 180^\circ}{24}$$

$$= \frac{720^\circ}{24}$$

$$= 30^\circ$$

$$\text{No of slots for } 90^\circ \text{ (K)} = \frac{90^\circ}{30^\circ} = 3$$

Hence,

Starting slot of the starting winding = 1st slot

Starting slot of the running winding = 1 + K

= 1 + 3

= 4th slot

So the starting winding must be inserted from the 1st slot and the running winding must be inserted from the 4th slot.

Winding table for starting coil

Pole 1	Pole 2	Pole 3	Pole 4
1 - 6	7 - 12	13 - 18	19 - 24
2 - 5	8 - 11	14 - 17	20 - 23
3 - 4	9 - 10	15 - 16	21 - 22

Winding table for running coil

Phase	Poles			
	1	2	3	4
R	4 – 9	10 – 15	16 – 21	22 – 27(3)
Y	5 – 8	11 – 14	17 – 20	23 – 26(2)
B	6 – 7	12 – 13	18 – 19	24 – 25(1)

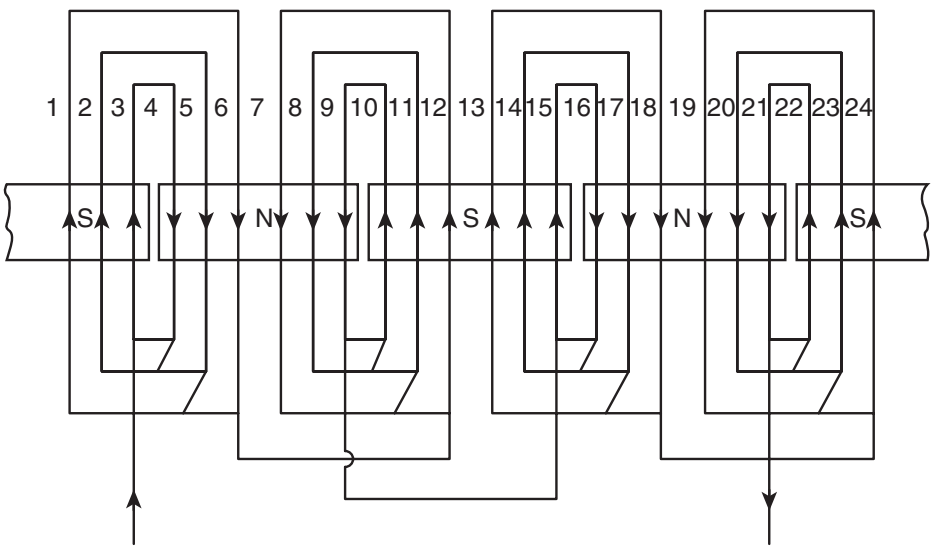

FIG. 8.13 1Ø, 4 Pole, 24 slots concentric starting winding diagram

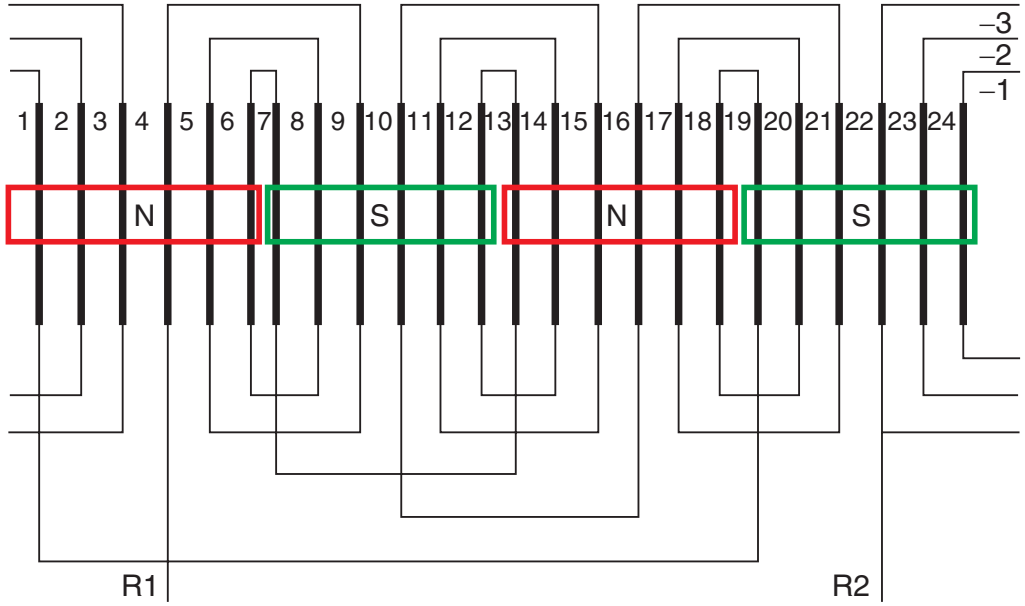

FIG. 8.14 1Ø, 4 Pole, 24 slots concentric running winding diagram

8.5.3 AC three phase single layer lap winding

AC, 1ϕ, 4 poles, 24 slots single layer lap winding diagram for an induction motor

$$\text{Pole pitch} = \frac{\textit{Number of slots}}{\textit{Number of poles}}$$

$$= \frac{24}{4} = 6$$

Coil pitch = 1 + pole pitch

= 1 + 6 = 7

= 1-7 (full pitched)

1-6 (short pitched)

In single layer winding, successive coils must be placed by leaving one slot between them. Hence the left coil sides should be inserted in odd slots and the right coil sides should be inserted in even slots.

So, coil pitch = 1 – 8 (or)

= 1- 6

$$\text{Total no. of coils (Single layer)} = \frac{\textit{No. of slots}}{2}$$

$$= \frac{24}{2} = 12$$

$$\text{No. of coils per pole} = \frac{\textit{No. of coils}}{\textit{No. of poles}}$$

(coils / pole)

$$= \frac{12}{4} = 3$$

$$\text{No of coils per phase} = \frac{\textit{No. of coils}}{\textit{phases}}$$

(coils / phase)

$$= \frac{12}{3}$$

= 4

No. of coils per pole per phase =

$$\frac{\textit{No. of coils}}{\textit{poles} \times \textit{phases}}$$

(coils / pole / phase)

$$= \frac{12}{4 \times 3}$$

$$= \frac{12}{12}$$

= 1

Total no. of coil groups = poles x phases

= 4 x 3 = 12

No. of coils per coil groups

$$= \frac{No.\ of\ coils}{No\ of\ coil\ groups}$$

(coils / coil group)

$$= \frac{12}{12}$$

= 1

Because of the coils per pole per phase is a whole number, this winding is a balanced winding.

Pole1			Pole2			Pole3			Pole4		
R	Y	B	R	Y	B	R	Y	B	R	Y	B
1	1	1	1	1	1	1	1	1	1	1	1

K - calculation(No of slots for 120°)

For a balanced winding,

No of slots for 120° (K) = $\frac{pole\ pitch}{Phase}$

$$= \frac{6}{3}$$

= 2

Hence,

Starting slot of 'R' phase = 1st slot

Starting slot of 'Y' phase = 1 + K = 1 + 2 = 3 rd slot

Starting slot of 'B' phase = 3 + K = 3 + 2 = 5th slot

Phase	Poles			
	1	2	3	4
R	1 – 6	7 – 12	13 – 18	19 – 24
Y	3 – 8	9 – 14	15 – 20	21 – 26(2)
B	5 –10	11 –16	17 – 22	23 – 28(4)

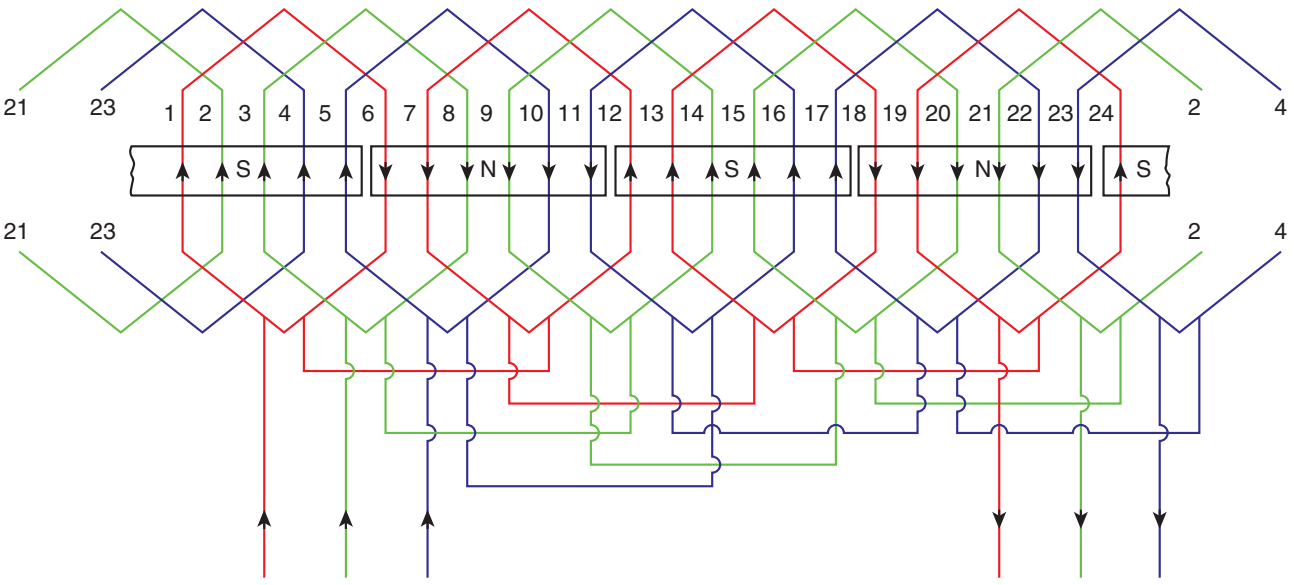

FIG. 8.15 Winding diagram for AC 3Ø induction motor, 4 pole 24 slots single layer lap winding

8.6 Conclusion

In this unit we learned about the knowledge of winding materials, winding parameter, DC and AC windings and updated the technologies connected with windings.

Activities

1. Prepare a winding diagram with table for 4 poles 6 slots simple lap winding
2. Prepare a winding diagram with table for 4 poles 6 slots for simple wave winding

Glossary

Gauge number	கதவு எண்
Winding coil	உல்லைச் சுருள்
Phase	நிலை
Stator	நிலையி
Rotor	சுழலி
Armature	மின்னகம்

Evaluation

IL5OPW

PART-A (1 Mark)

Choose the correct answer

1. Heart of a motor is
   a) Stator
   b) Rotor
   c) Winding
   d) Bearings
2. The basic property needed for a good conductor is
   a) Low resistance
   b) High mechanical strength
   c) Best soldering property
   d) High dielectric strength
3. The diameter of the SWG plate is
   a) 3 ¼ inches
   b) 3 ½ inches
   c) 3 ¾ inches
   d) 4 ¾ inches
4. The instrument used to measure the diameter of a conductor is
   a) Wire gauge plate
   b) Feeler gauge
   c) Dial gauge
   d) Screw gauge
5. Example for the liquid insulating material is
   a) Asbestos
   b) Varnish
   c) Glass
   d) Mercury
6. The winding placed in the rotating part of DC machine is
   a) Main field winding
   b) Armature winding
   c) Inter pole winding
   d) Compensating winding

7. The closed type of slots are used in
   a) Stators of small size motors
   b) Stators of medium size motors
   c) Stators of squirrel cage induction motors
   d) Rotors of squirrel cage induction motors

8. The value of back pitch will be in
   a) Odd number
   b) Even number
   c) Fraction
   d) Decimal

9. The value of 'm' in simplex winding is
   a) 1
   b) 2
   c) 3
   d) 4

10. Which law is applicable to know the direction of current in a DC machine?
   a) Fleming's right hand rule
   b) End rule
   c) Fleming's left hand rule
   d) Ohm's law

11. The number of parallel paths in DC lap winding is
   a) P/2 b) 2P
   c) 2P d) 2

12. The number of parallel paths in DC wave winding is
   a) P
   b) 2P
   c) P/2
   d) 2

13. The number of brushes in a DC machine is
   a) Equal to the number of parallel paths.
   b) Equal to the number of slots.
   c) Equal to the half of the number of slots.
   d) Equal to the half of the number of poles.

14. The distance between two active sides of a coil in DC winding is called
   a) Front pitch
   b) Coil pitch
   c) Back pitch
   d) Fractional pitch

15. The distance between the starting ends of two adjacent coil is
   a) Front pitch
   b) Back pitch
   c) Coil pitch
   d) Pole pitch

16. The type of winding used in DC armature is
   a) Main field winding
   b) Inter pole winding
   c) Open type winding
   d) Closed type winding

17. Pole pitch is referred to as
   a) The number of slots per pole
   b) The number of slots per phase
   c) The number of slots per pole per phase
   d) Half of the number of slots

18. In full pitched winding, the electrical angle between two coils are
   a) 60° b) 120°
   c) 180° d) 360°

19. The number of coils in single layer winding is
    a) Equal to the half of the number of slots
    b) Equal to the number of slots
    c) Equal to the half of the number of poles
    d) Equal to the number of poles

20. If the numbers of coils are equal to the number of slots, then the type of winding is
    a) Single slot winding
    b) Double slots winding
    c) Single layer winding
    d) Double layer winding

21. If the coil groups of a phase winding having unequal number of coils, then the winding is called as
    a) Half coil winding
    b) Whole coil winding
    c) Unbalanced winding
    d) Balanced winding

22. The number of coil groups in a phase of a full pitched winding is
    a) Equal to the number of poles
    b) Equal to the half of the number of poles
    c) Equal to the number of slots
    d) Equal to the half of the number of slots

PART-B (3 Mark)

Answer the questions in brief

1. What is the use of winding in motors?
2. What is called a conductor?
3. What are the devices used to measure the thickness of conductors.
4. What is lap winding?
5. What are the three types of windings used in AC machines?
6. Write briefly about concentric winding?
7. What is called pole pitch?
8. Define pitch factor.
9. What is whole coil winding?

PART-C (5 Mark)

Answer the questions in one page

1. Draw the diagram of a standard wire gauge plate and explain how to find the thickness of a conductor.
2. Write short notes on –
   a. Back pitch
   b. Front pitch
   c. Coil pitch
3. Explain the method of calculating the number of coils and coil groups in AC winding.

PART-D (10 Mark)

Answer the questions in two page

1. Draw the double layer simplex lap winding diagram for a DC machine having 2 poles, 6 slots and 6 commutator segments. Also mention the position of brush.
2. Draw the simplex wave winding diagram for a DC machine having 2 poles, 6 slots and 6 commutator segments. Also indicate the position of brush.
3. Develop the winding table for a single layer lap winding of 4 poles, 24 slots, AC three phase induction motor.

Reference Book

1. A text book of 'Electrical Technology' Volume-III B.L.Theraja and A.K.Theraja, S.Chand & Company Ltd.

Reference Internet Source

1. http://www.wikipedia.org
2. https://www.electrical4u.com



UNIT 09

Earthing

LEARNING OBJECTIVE

To understand about Earthing, types, safety measures, lightning arrester and Electro static discharge.

TABLE OF CONTENTS

9.1 Introduction
9.2 Earthing importance and types
9.3 Safety measures followed in earthing
9.4 Lightning arrester, its importance and application
9.5 Electro Static Discharge (ESD)
9.6 Conclusion

9.1 Introduction

Earthing is defined as "the process in which the instantaneous discharge of the electrical energy takes place by transferring charges directly to the earth through low resistance wire.

To ensure safety, earthing can be done by connecting the electrical appliance to earthing systems or electrodes placed near the soil or below the ground level. Selection of earthing is very important for human safety, safety for houses and electrical equipment. Earthing brings the body of electrical equipment to zero potential and thus provides safety to the person operating the equipment from electrical shock. When an earth fault occurs then a heavy current flows through the circuit and due to this heavy current fuse in the circuit melts or the MCB of the circuit gets down and the faulty circuit will be disconnected from the supply.

Definition

Earthing is defined as the process of connecting a non–current carrying metallic parts of electrical equipment or the neutral of the supply system to the earth.

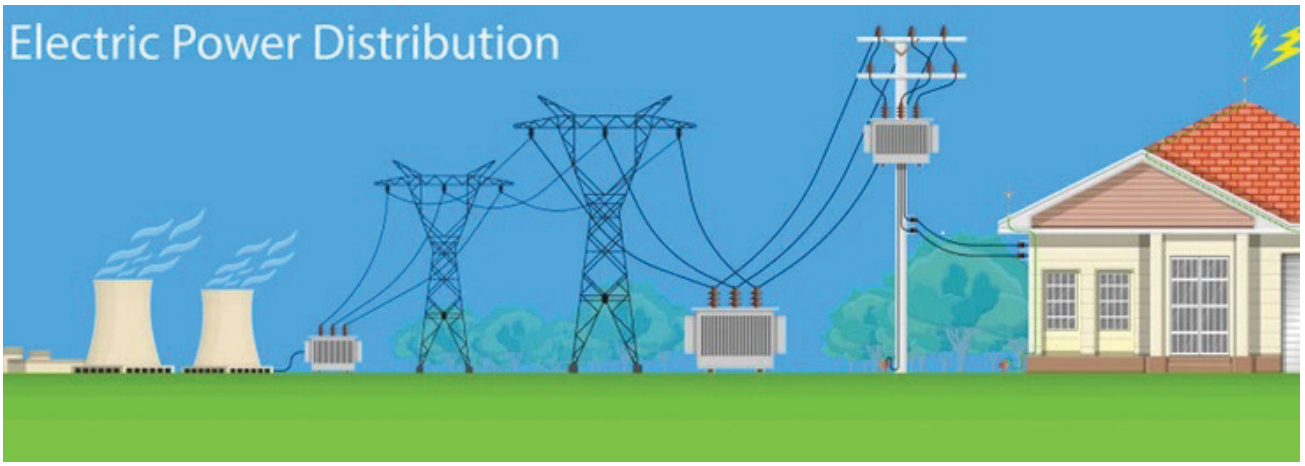

FIG. 9.1 Electric power distribution

9.2 Earthing importance and types

Importance of earthing

(A) Minimises risk of electric shock

The main purpose of earthing is to avoid or minimize the chance of electrocution. Any leakage or faulty current in the circuit causes the presence of electric charge on exposed conductive surfaces.

Earthing provides a low resistive conductive path directly to the earth, which carries any such fault or leakage current.

As the earth line is always in contact with the earth, the entire point of the earth conductor will not have enough potential to cause an accident. That is no potential difference to cause a serious amount of current flow through another path. Hence, the metal parts, chassis of the device, etc., which are connected to the earth line will be always safe to touch. So, It is better to earth any non-insulated body of the electrical appliances which may have human contact. Also, it is recommended to provide earthing for appliances which have contact with water or liquids.

So earthing is essential to protect human lives as well as provide safety to electrical devices and appliances.

(B) Dissipation of static charge

In a perfectly earthed system its potential remains approximately equal to zero. So it can remove most of the static charge build-up in the conductors.

(C) Eliminate stray voltage

Similar to static charge it also prevents stray voltage in the line. That is no potential difference in the conductor.

(D) Voltage stabilization

In a network which has multiple feeders or sources there must be a common point which acts as a universal reference point. The earthing acts as a balance point.

(E) Protection from power surges

Earthing can protect sudden excessive surges; it also provides protection from lightning strikes. Any lightning strikes on the exposed metal or received through another path which is connected to earth, phase get discharged directly to earth.

(F) For proper functioning of equipments

Proper earthing is very important for the functioning of the devices connected to the system. Mainly protective devices like ELCB, earth fault relays, etc. needs proper earthing for its functioning. These devices used for the reference of leakage current through the earth line.

- Earthing provides a surface around and under a substation that is at a uniform potential and is approximately equal to zero potential or absolute earth potential as possible.
- It provides protection from electrical shock.
- Earthing also improves the performance of an electrical system.
- Earthing is required to maintain the line voltage constant.
- It also serves as a return conductor for telephone and fraction work.

Earthing is broadly classified as a. System earthing and b. Equipment earthing.

a System earthing – In this type of earthing the conductor having current is connected to the ground. System earthing is used to protect from lightning and voltage stabilization.

Examples – Earthing in substation, generation station.

b. Equipment earthing- This type of earthing is usually done in houses to protect the household equipment.

Types of earthing

1. Plate earthing
2. Rod earthing
3. Pipe earthing

9.2.1 Plate earthing

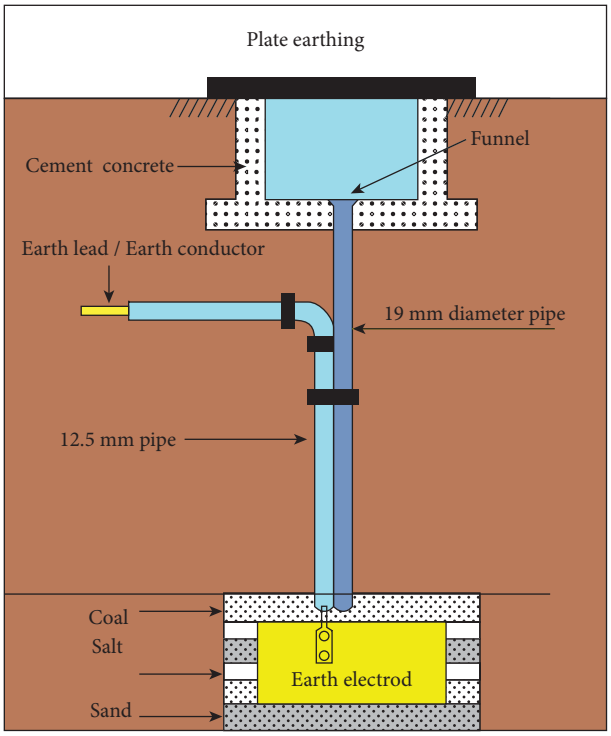

FIG. 9.2 Plate earthing

- In this type, a plate is placed vertically in the ground and then an earth electrode is attached to it.
- In this earthing, a layer of 15 cm of salt and a layer of 15 cm of coal is placed below the earth plate.
- The earth plate used here is generally made up of copper of size 60 cm × 60 cm × 3.18 mm and this plate is embedded 3meter in the ground.
- Galvanized iron (GI) is also used as an earth plate having dimensions 60 cm × 60 cm × 6.3 mm.
- Generally for normal work galvanised iron plates are preferred due to its lower cost in comparison to copper plates of dimension 30cm × 30cm which is found to be the most effective earth electrodes as these electrodes are not affected by the soil moisture.
- Here, Galvanised iron is preferred instead of copper plates due to its high cost.

9.2.2 Rod earthing

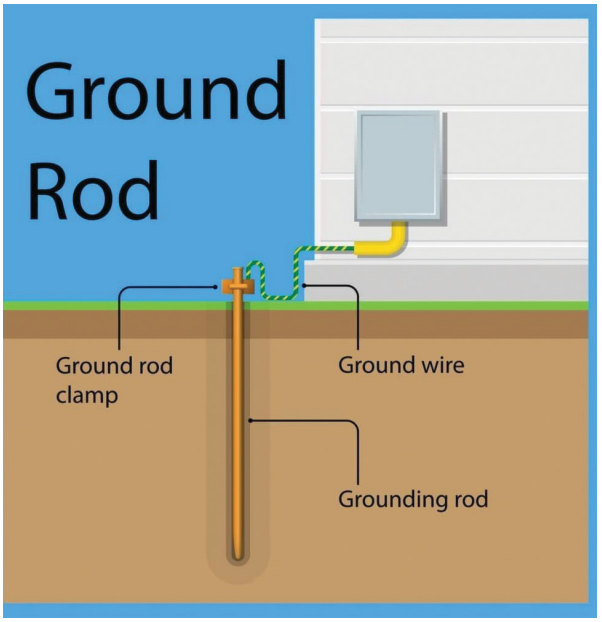

FIG. 9.3 Rod earthing

- In this type, zinc or copper is used as an earth electrode.
- This type of earthing is used especially in hill areas where earth pit digging is difficult.
- Solid rod should be used in this earthing, not hollow.
- Here the rod is grounded up to 1 meter to 1.5 meters.
- The dimension of the rod used is 12 mm to 20 mm.
- This type of earthing is the cheapest and less time to do.

9.2.3. Pipe earthing

- In this type, the GI pipe having a diameter of 38 mm and length of 2 meters is used.
- Here the holes (12 mm diameter) are made in the GI pipe and earth wire of 8 SWG of GI is fastened to the top section of the pipe with the help of bolt and nuts.
- The GI pipe is placed up to a depth of 2.5 to 3 meters from the earth's surface.

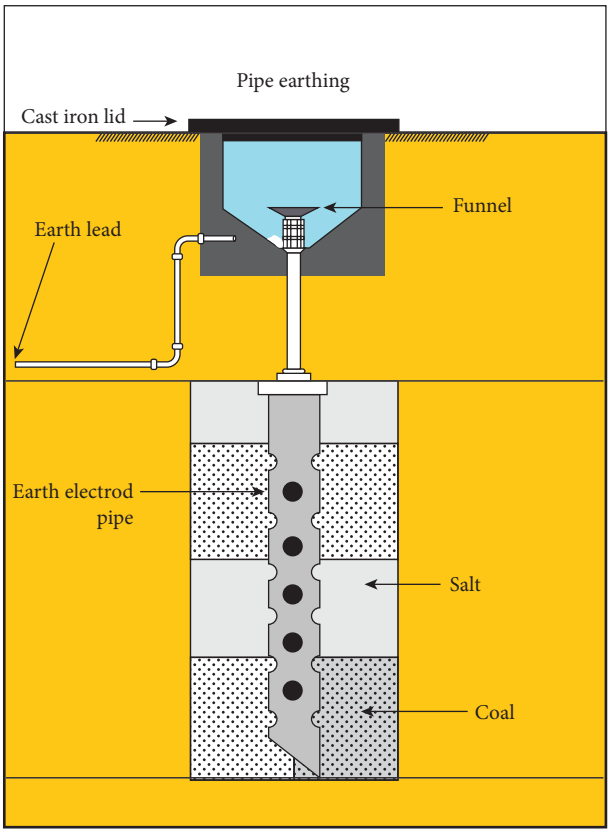

FIG. 9.4 Pipe earthing

- Three layers of 15 cm of salt and coal are used around the GI pipe.
- The layer of a mixture of salt and coal is used to improve the soil condition and efficiency of the earthing system.
- The pipe is always placed vertical and if any rocks come in the pipe's way then the pipe would be bent a maximum of up to 30^0.
- In case of pipe earthing, the earth wire connection with the GI the pipe is fixed above the ground. So it is easy to check for carrying out continuity tests, when required. But this is difficult in case of plate earthing.

Value of earthing electrodes at various places

No.	Place	Value of earthing electrode
1.	Large power station	0.5 Ω
2.	Medium power station	1 Ω
3.	Small power station	2 Ω
4.	Domestic application	1 Ω

Methods to reduce the resistance of the earth electrode

- By pouring water into the surface where the earth electrode is dipped.
- By increasing the depth of the rod or plate.
- By adding salt and charcoal (salt and charcoal maintain moisture for a longer period of time).
- By increasing the area of the plate we can reduce the earth electrode.
- By connecting plates in parallel (by connecting plates in parallel equivalent resistance of the plate becomes smaller).

9.3 Safety measures followed in earthing

1. All the material supplied for the earthing work should be inspected by RDSO.
2. Site location for earthing
   i) Low line areas close to the building are good for locating earth electrode.
   ii) Dry sand, lime stone, granite and any stony ground should be avoided.
   iii) Earth electrode should not be installed on high bank or made-up soil.

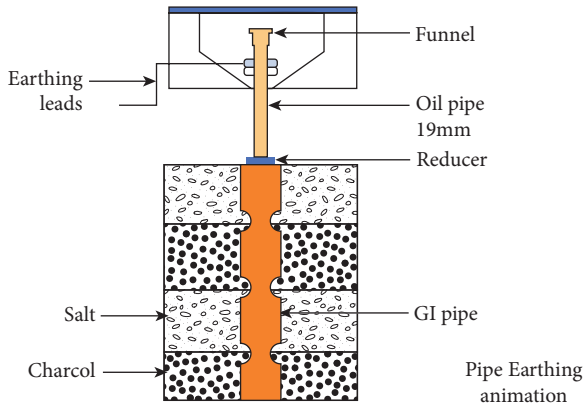

FIG. 9.5 Pipe earthing animation

3. The copper coating on earth electrode should not be cracked due to damage during storage / transport and should be free from corrosion.
4. The packing bags of earth enhancement compound should be in sealed condition.
5. For the earth pit, a hole of 100mm-125mm diameter should be drilled to a depth of approx. 3m and the earth electrode is placed in the hole with about 150mm of bottom part inserted in the natural soil.
6. Earth enhancement material (minimum 30-35Kg) shall be filled into the drilled hole in a slurry form such that it spreads evenly around the electrode covering entire length of the hole.
7. In order to achieve earth resistance of less than or equal to 1 ohm, multiple earth pits should be provided depending upon soil resistivity if required.

8. The distance between two earth electrodes shall be minimum 3m and maximum up to 6m (approx.).
9. The 25 x 2 copper strip or 8mm round solid copper inter connecting the earth electrode shall be at a depth not less than 500mm below ground level.
10. Proper size of cable should be used for connection of equipments to equi-potential busbar, SPDs, and to earth electrode.
11. The length of cable connection between SPDs and equi-potential busbar and between equipment and equi-potential busbar should be as short without bends.

9.3.1 Procedures followed during earthing

The following procedures were to be adopted during earthing.

a. Clean the surfaces of the various components i.e. earth electrode, cable, copper busbar, copper tape and mould etc. With the help of card cloth brush before performing exothermic welding to ensure that surface is free from oil & dust.
b. Pre heat the welding surfaces of various components to ensure that the surface is free from moisture.
c. Mould used should be correct for the component size and application. Do not use worn out or broken moulds which could result in leakage of molten weld metal.
d. Ensure that handle clamp is attached to the mould and properly adjusted.
e. Ensure that all the components to be jointed properly fit into the mould and the mould is in level position.
f. Place the correct size of steel disc into the mould crucible and make sure the disc sits well at the base of the welded metal cavity.
g. Pour recommended size of weld metal powder into the mould crucible.
h. Check out leaks, make sure that weld metal do not enter into the weld cavity.
i. Ignite the weld powder at the lid opening. Use only firm's recommended igniter. Make sure that no inflammable items are around the mould.
j. Once welding is completed, wait for two minutes before opening mould to allow metal to cool.
k. Gently scrap off the un- wanted slag from the crucible with a mould scraper.
l. Clean the crucible and the weld cavity with a mould cleaning brush.
m. Welding should be carried out only by the well trained staff of the supplier.
n. Pour sufficient water so that the salt, sand and coal mixture is in paste / mud form.
o. Allow the pit to absorb the water and become compact.
p. Test the earth pit before connecting to the electrical circuit.
q. Avoid excess watering.
r. Do not hammer the earth electrode.
s. The surroundings of the earth electrode should be kept moist by periodically pouring water through the pipe in order to keep the resistance below specified value.

t. Coke treated electrodes shall not be situated within 6 meters of other metal structure.

u. The protective earth of telecom system shall not be connected to the earth of main power supply system. A minimum distance of 10 meters is desirable.

9.4 Lightning Arrester Its Importance and Application

A lightning arrester is a device that is used to provide a path to the static electric discharge between the charged clouds and the earth. Lightning arresters typically have a high voltage terminal and a ground terminal. As it is used for the protection of power system against high voltage surge so it is also called a surge diverter.

Definition

A lightning arrester is an apparatus or a device which is used in electrical power systems and telecommunication system for the protection of insulation and conductors of the system from lightning strokes.

Lightning is a huge spark developed due to massive electrostatic discharge taking place between the electrically charged regions within the same cloud or between a cloud and a surface of the earth.

These electrical discharges occur between or within clouds than to earth and most of them are terminated into the earth results in serious hazards.

A lightning arrester is a protective device that is used in substations, generating stations, DTR structure, etc

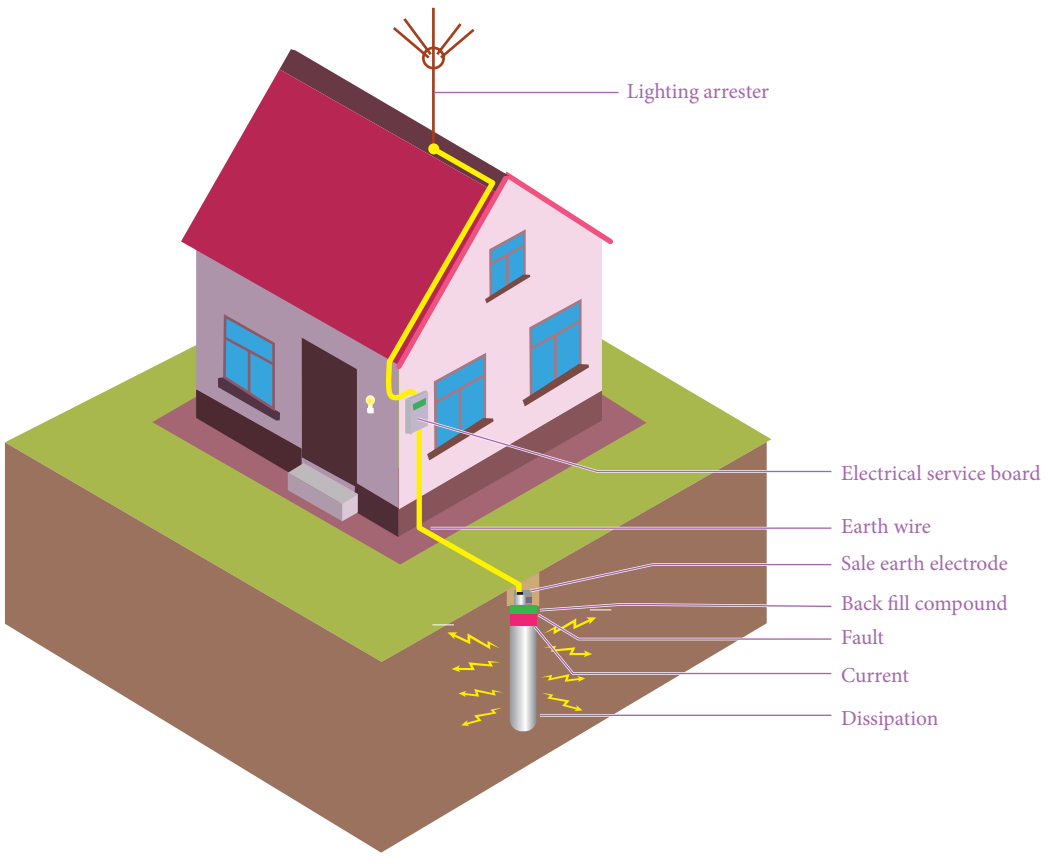

FIG.9.6 Lightning arrester

to provide protection against surge and lightning strikes. The lightning arresters are composed of ZnO or SiC material. The ZnO or SiC material has the unique property that they don't allow current to pass through them under normal conditions but allows current to through them when a high electric potential is applied.

The lightning arresters provide protection under two conditions, they are

1. **Lightning Strikes**

   Suppose if a lightning tender or strikes occur which has high current, high voltage, and high frequency then this high current flows through arrester then to ground.

2. **Surge**

   When we suddenly isolate the circuit in stations, then surge will occur in lines, these surges are also passed to ground with the help of lightning arresters. The lightning arrester allows surge current to pass through them.

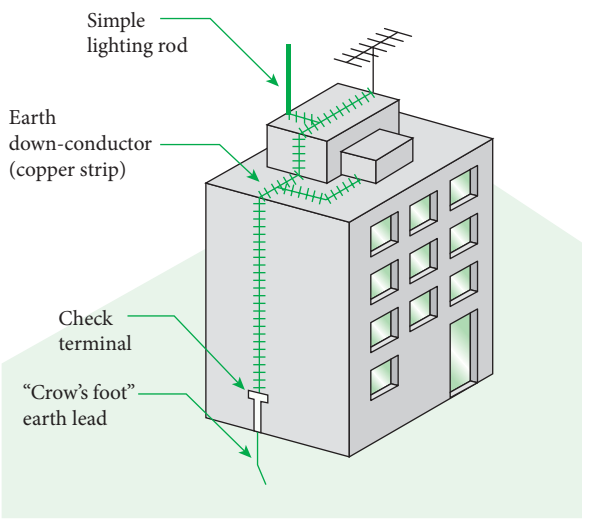

FIG.9.7 Line diagram of lightning arrester

The lightning arresters in substations are always connected at the starting side and also at the end side. The lightning arresters always come first in substations.

9.4.1 Working principle of Lightning Arresters

The principle is that once the voltage surge travels across the conductor and reaches the place where it is to be installed. So it will break the insulation of the conductor for a moment so that the voltage surge can be discharged towards the ground.

Once the system is less than the voltage, the insulation will be re-established between the ground and the conductor. The current flowing towards the ground is turned off.

9.4.2 Advantages of lightning arrester

The advantages of Lightning arrester are as follows:

- Damage caused by lightning can be minimized.
- Easy to use.
- Provides protection of equipment outside the substation.
- Damage to the overhead line can be avoided.
- Outlet surgeies can be avoided.
- Electromagnetic interference.

9.4.3 Disadvantages of lightning arrester

The Disadvantages of Lightning Arrester are as follows:

- Installation costs are higher.

9.5 Electro Static Discharge (ESD)

Electrostatic discharge is when an electrostatic charge builds upon a conductor. This is due to a difference in voltage potential. When we release this charge, it causes the release of kinetic electrostatic energy. This energy can have destructive effects if it can flow through a conductive medium includes air or touches something conductive. As a result, ESD can damage sensitive electronics. This makes it essential to understand and control ESD.

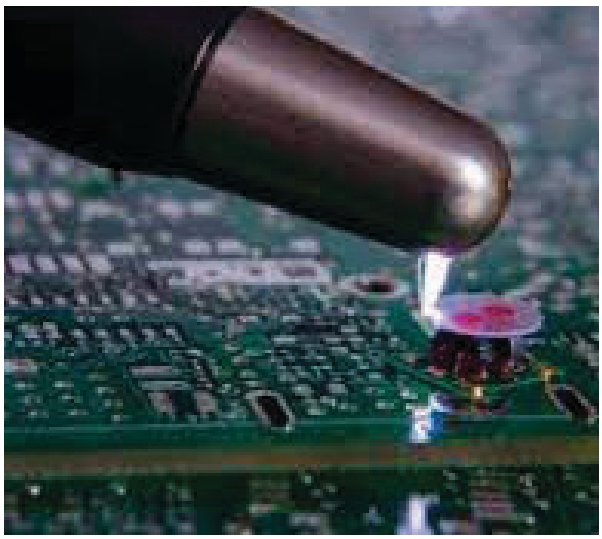

FIG. 9.8 Electro Static Discharge (ESD)

In a typical environment like your home, you will encounter electro static energy. They come from rubbing your clothes or your bed sheets against the carpet. This is why you need to store your valuables in a dry place away from carpet and clothing.

Electro static charges build upon items that come into contact with one another. This is when moving between points of different potential. If the potential difference is too great, an electro static discharge can occur. The electro static charge created when this happens can have destructive effects. Some of the most affected include sensitive electronics and even cause fires.

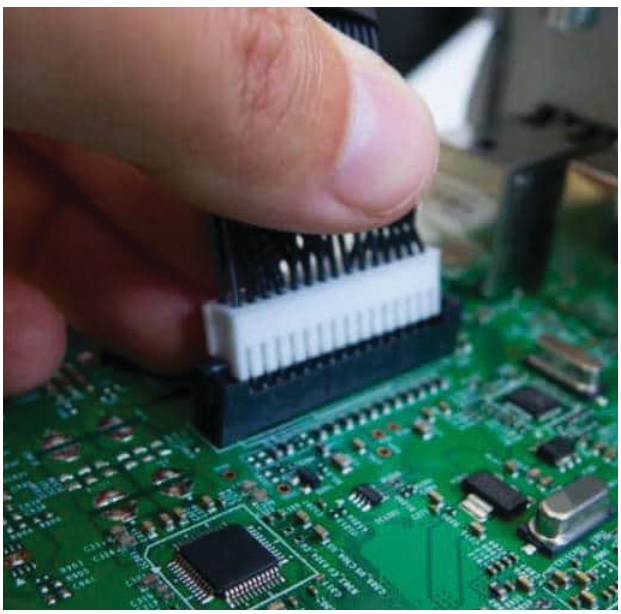

FIG. 9.9 Contact of ESD

ESD can occur in four ways: physical contact, generation (atmospheric), accumulation, and discharge. The discharge of static electricity Is a result of physical contact.

9.5.1 Types of ESD damage

The most common form of ESD damage is the electrical breakdown of air surrounding an object. When charges build upon an object, they cause the air around it to become ionized. A conductive path develops when this happens. Then a discharge will occur, negatively affecting electronics. In addition, bringing equipment into this electrostatic field can create a short circuit. Damaging effects can occur even if the human body only connects with an object's surface.

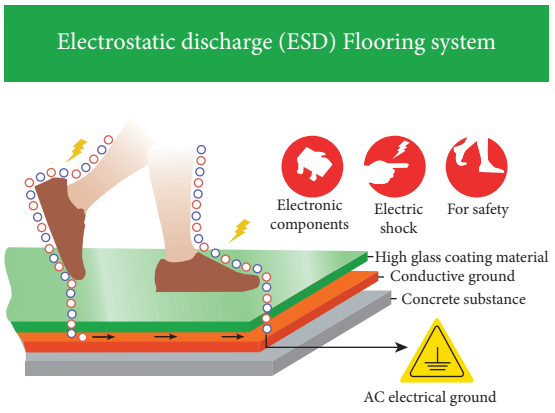

FIG. 9.10 ESD flooring system

a) Catastrophic damage

Suppose there is something conductive close to the ESD discharge, as equipment. In that case, the discharge can transfer all its energy into the conductive object. If the object is a person, it could result in death. In addition, it could cause a huge loss of damage to expensive electronics and equipment. Some types of ESD damage are so serious that they can cause fires. Risk areas include computer labs or copy shops with expensive type-in machines.

b) Latent damage

ESD can cause slight damage to sensitive electronics. But the damage isn't immediately obvious. However, the large discharge will destroy the device if moved into another electrostatic field. Therefore, ESD is a real issue for all work areas for health and safety at work, industrial settings, and heavy industry.

ESD occurs due to friction from

- Human contact
- Machinery rubbing against other machinery
- Materials rubbing against each other
- Conductive material rubbed on conductive materials like vinyl floors or carpets

ESD can be a damaging force for many industries, and it is essential to know about it and how to prevent it. Some of the most common electronic equipment used in heavy industry is ICs. They are very susceptible to ESD.

9.5.2 The most common times for ESD damage are during

(i) Goods input:

As you bring goods into a storage area, ESD damage can occur when you move the material into an ESD field.

(ii) Acceptance

When picking goods from storage, ESD damage can occur when the material comes into contact with another ESD field.

(iii) Transfer

The transfer of goods around a workplace increases the risk of ESD damage. For example, as you move goods from one place to another on forklifts, ESD occurs.

(iv) Production

When producing goods, they risk ESD damage, causing potential differences. This means that machines close to each other can generate enough voltage differences. This will cause electrostatic discharges.

(v) Assembly

Complex electronics, particularly computers and other equipment, that ESD can fail. You should be careful not to

assemble them within an ESD zone. It is essential to consider ESD protection when developing machinery or equipment. There are a few different methods to help prevent electrostatic damage from occurring. These include insulation, grounding, air ionization, and shielding.

(vi) Insulation

This involves wrapping the item that could cause a discharge with an insulating material. It helps the material cannot come into contact with something conductive.

(vii) Testing

Testing is an integral part of preventing ESD damage. You need to test your machinery and equipment before using them. This ensures that they are not causing electrostatic discharge. Also, perform tests if the machinery needs to contact something conductive. You can test to see the ESD damage that may result from this type of contact. Each time you move the equipment, one must do the testing.

(viii) Storing

It's essential to store electrical and electronic materials in an ESD safe area. This means you should not store electronics or other sensitive items on the floor.

(ix) Grounding

You need to ground electronic components and equipment when brought into the building. This helps prevent electrostatic damage from occurring within the facility.

(x) Air ionization

Air ionization is vital for preventing electrostatic damage within a facility. It creates a conductive layer of air around each object to protect it from electrostatic buildup.

(xi) Packing

Packing can cause electrostatic damage. It occurs if you do not handle the materials within an ESD-safe environment. For example, you should wrap the materials with non-conductive bubble wrap and wrapped in a plastic, non-conductive film. In addition, you should seal the plastic bags that hold cords and computer mice when not used. Packing is vital for ESD prevention because goods get to your facility.

(xii) Shipping

We often ship goods from one facility to another. ESD damage can occur if you do not pack the goods in a way that avoids ESD damage. You must send materials without any conductive material that can generate ESD.

(xiii) Sorting

We use sorting machines, especially when delivering goods. Unfortunately, sorting machines have wires that can become charged by ESD. So, you must protect the goods from them.

(xiv) Maintenance:

Proper maintenance of ESD-safe machinery can help prevent electrostatic damage from occurring. Dust and debris accumulating on sensitive machinery can build up enough static electricity to cause a discharge. Therefore, maintaining ESD-safe machinery is essential for avoiding ESD-damaged equipment.



FIG. 9.11 ESD Protected area

9.5.3 ESD is a Huge Problem for Many Industries

ESD damage can happen to any industry that deals with sensitive electronics. This includes chemical plants and storage facilities to industrial factories and assembly lines. Electrostatic damage is a repeatable problem for many companies. It affects the heavy industry dealing with machinery and electronics, especially computer equipment. ESD damage occurs when friction between two things generates an electrostatic charge. This causes the item with the charge to discharge into another conductive object. It also has an electrostatic charge. In the electronics industry, ESD damage is a hazard that everyone has experienced. Damage can have devastating effects. The highest risk is where product damage and data loss are often problematic. In addition, many companies are dealing with equipment failures—some lost sales due to the mistakes caused by ESD damage.

9.6 Conclusion

The importance of earthing, its types, safety measures, lightning arresters and electrostatic discharge were detailed with its classification and which will be benefitted for the present technology and also very much useful for getting employment opportunity.

Activities

1. Test the earthing resistance in your house
2. Identify which type of earthing is installed in your house

Glossary

Earthing	நில இணைப்பு
Plate earthing	தகடு வகை இணைப்பு
Rod earthing	கம்பி வகை இணைப்பு
Pipe earthing	குழாய் வகை நில இணைப்பு
Lightning arrester	மின்னல் தடுப்பான்
Electro Static Discharge	மின் நிலை வெளியேற்றம்

Evaluation

PART-A (1 Mark)

Choose the correct answer

1. Earthing is provided for ----------
   a) safety purpose
   b) regulating the phase supply
   c) only in generating stations
   d) disconnecting the supply
2. Earthing provides a ---------- conductive path direct to the earth.
   a) High resistive
   b) Low resistive
   c) Static charge
   d) Low potential
3. Electric shock can be protected by doing ----------
   a) Relay b) Fuse
   c) Earthing d) MCB
4. Which type of material is not used to create earthing rods?
   a) Carbon bonded polymer
   b) Stainless Steel
   c) Galvanised iron
   d) Copper bonded to steel
5. How many types of earthing are commonly used?
   a) Two b) Three
   c) Four d) Five
6. How the plate is placed in plate earthing?
   a) Vertically
   b) Horizontally
   c) Parallel to earth
   d) Slanting
7. The copper earth plate used in plate earthing is of size ----------
   a) 30 cm X 30 cm X 3.18 mm
   b) 60 cm X 60 cm X 3.18 mm
   c) 20 cm X 20 cm X 3.18 mm
   d) 40 cm X 40 cm X 3.18 mm
8. The Galvanised Iron used in earth plating is of size ----------
   a) 30 cm X 30 cm X 6.3 mm
   b) 40 cm X 40 cm X 6.3 mm
   c) 60 cm X 60 cm X 6.3 mm
   d) 50 cm X 50 cm X 6.3 mm
9. In Rod earthing, the earth electrode is made of ----------
   a) Aluminium
   b) Iron
   c) Copper
   d) Silver
10. In rod earthing, the rod grounded under the earth is ----------
    a) 1 to 1.5 m b) 1.5 to 2 m
    c) 2 to 2.5 m d) 2.5 to 3 m
11. The dimension of the rod used in rod earthing is ----------
    a) 6 mm to 10 mm
    b) 10 mm to 12 mm
    c) 12 mm to 20 mm
    d) 20 mm to 25 mm
12. In pipe earthing, the pipe is made of ----------
    a) Steel
    b) Copper
    c) Galvanised iron
    d) Iron

13. In Pipe earthing, the GI pipe is having the diameter of ----------
    a) 30 mm b) 34 mm
    c) 38 mm d) 42 mm
14. The GI pipe is placed up to a depth of ---------- from the earth's surface in pipe earthing.
    a) 1.5 to 2 m b) 2 to 2.5 m
    c) 2.5 to 3 m d) 3 to 3.5 m
15. The value of earthing electrode in domestic application is ----------
    a) 0.5 ohm b) 5 ohm
    c) 2 ohm d) 1 ohm
16. All the material supplied for earthing work should be inspected by --------
    a) DRO b) ISO
    c) ISI d) RDSO
17. The distance between two earth electrodes in earthing is ----------
    a) 3 m to 6 m b) 2 m to 3 m
    d) 5 m to 7 m d) 2 m to 5 m
18. Lightning arresters typically have a high voltage terminal and a ---------- terminal.
    a) Phase b) Ground
    c) Neutral d) Supply
19. Lightning arrester is used to provide a path to the static electric discharge between ----------
    a) Charged clouds and phase
    b) Charged clouds and neutral
    c) Charged clouds and earth
    d) Charged clouds and supply
20. Electro static discharge can occur in how many ways?
    a) Two b) Three
    c) Four d) Five

PART-B (3 Mark)

Answer the questions in brief

1. Define – Earthing.
2. What is meant by voltage stabilization?
3. Name the types of earthing.
4. Tabulate the value of earthing electrodes at various places.
5. Write short notes on lightning arrester.
6. State the term Surge in lightning arrester.
7. Write down the applications of lightning arrester.

PART-C (5 Mark)

Answer the questions in one page

1. Explain plate earthing with diagram.
2. Explain rod earthing with diagram.
3. Explain pipe earthing with diagram.
4. What are the methods for reducing the resistance of the earth electrode?
5. Write down the working principle of lightning arrester.
6. Write the advantages and the disadvantages of lightning arrester.

PART-D (10 Mark)

Answer the questions in two page

1. Explain briefly the safety measures followed in earthing with suitable diagram.
2. Briefly explain the various types of ESD damages.

Reference Book

1. A text book of 'Electrical Technology' Volume-III B.L.Theraja and A.K.Theraja, S.Chand & Company Ltd.

Reference Internet Source

1. http://www.wikipedia.org
2. https://www.electrical4u.com



UNIT 10

PROJECT

VWLYZ

LEARNING OBJECTIVE

In this unit, the method of doing this project is to create the skill of exposure in the domain of the engineering field. The systems adopted in doing this project inculcate the knowledge of new innovations in connection with the electrical and electronic subject and gain the updated existing techniques adopted right now.

TABLE OF CONTENTS

10.1 Introduction
10.2 Solar-powered car
10.3 Bridge rectifier
10.4 Smart cell phone jammer
10.5 Conclusion

10.1 Introduction

Projects in schools usually dealt with the basic terms related to the platform of electrical engineering, which really motivates the students to develop the skill of new techniques on par with the theory that we have studied. Both theory and practical study of a thing conquer the project to design the skill technically which is required exclusively.

10.2 PROJECT 1: Solar-powered car

Title of the project

Design and build a car with a source of solar power.

Aim:

To design and build a car by using renewable sources of solar power energy.

Components required:

S. No	Tools and materials	Range / Value	Quantity
1.	Centre shaft DC gear motor	12v	1
2.	Cardboard	15cmx30cm	1
3.	Thin metal rods	-	2
4.	Tiny wheels	-	4
5.	Solar panel	12v	1
6.	Tape and glue gun with the glue stick	-	1 each
7.	Crimp alligator clips	-	1

Procedure:

1. Solder the wires or crimp alligator clips with the wires
   - Remove the plastic covers from the alligator clips, and slide them onto the wires.
   - Use needle-nose pliers to tightly crimp the alligator clips onto the bare metal ends of the wires.
   - Slide the plastic covers back over the alligator clips.

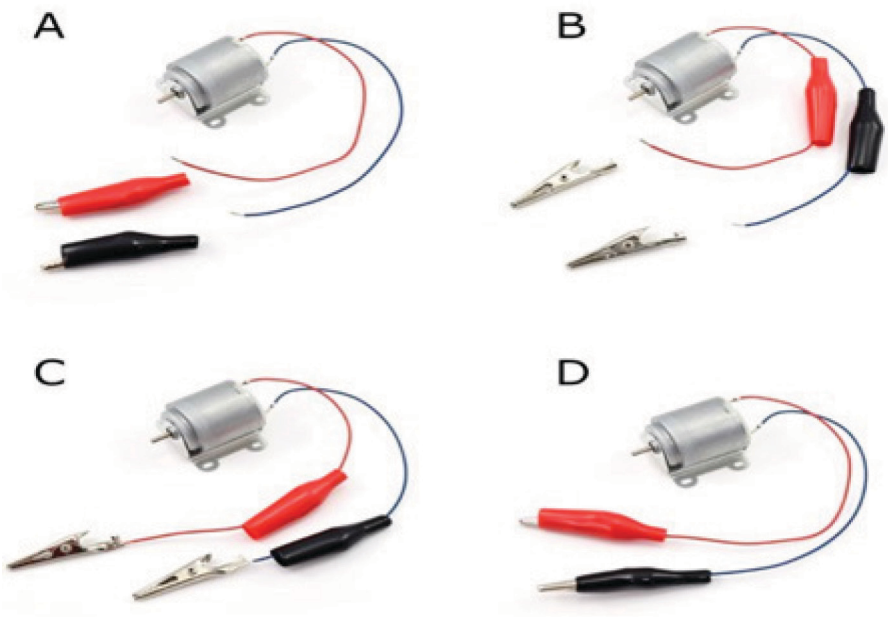

FIG 10.1

2. Take 2 straws and insert a metal rod inside the straw.
3. Fix the metal rod along with the straw inside the wheels.

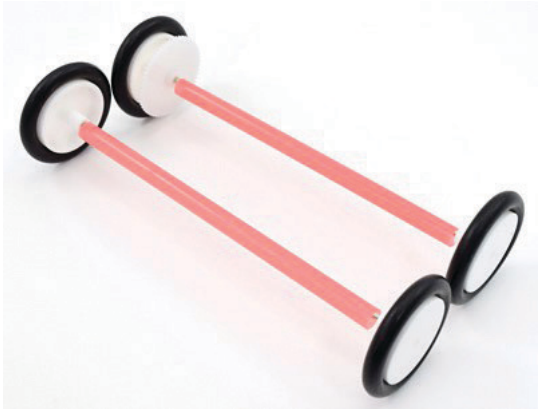

FIG 10.2

4. Construct the chassis of the car and connect the wheels and axels to the chassis



FIG 10.3

5. Connect the motor to the chassis.

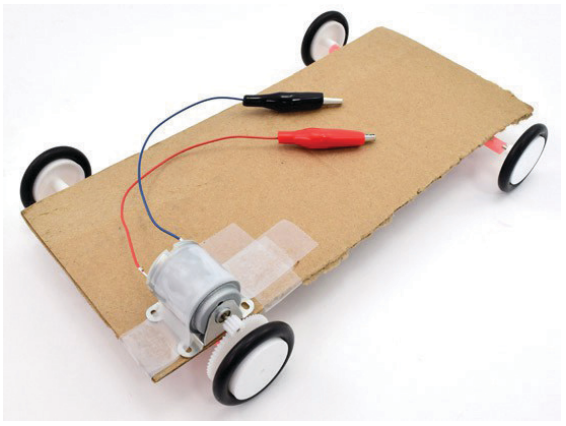

FIG 10.4

6. Fix the metal pins as a support to the solar panel

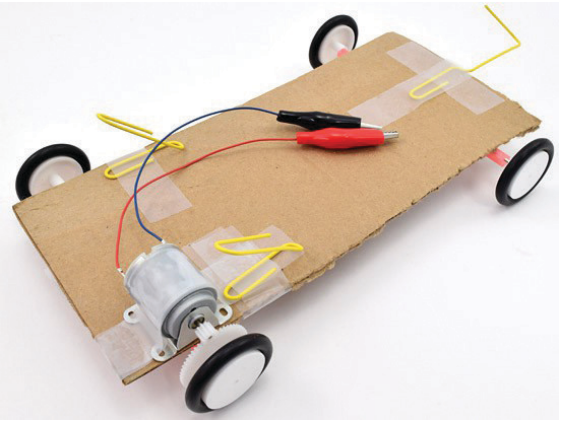

FIG 10.5

7. Fix the alligator clips to the two tabs on the back of the solar panel, and secure the solar panel to the chassis.
8. Now solar powered car is built completely.

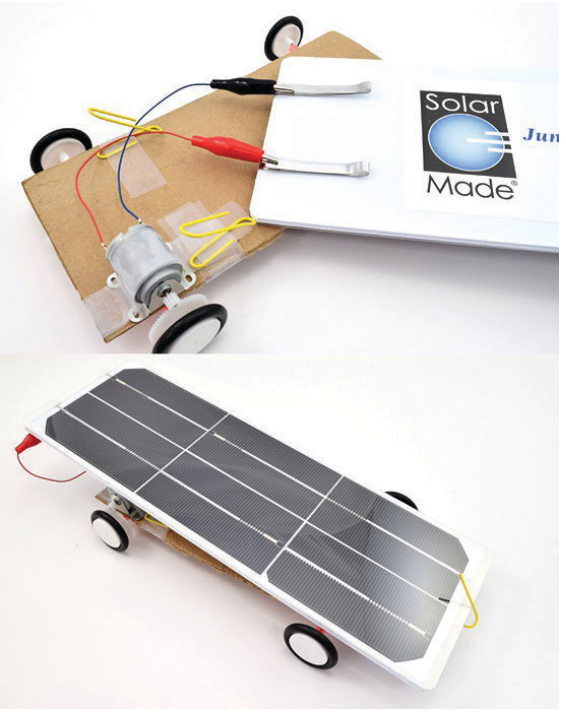

FIG 10.6

Result:

Thus, a solar-powered renewable car was designed and built as per the stated nomenclature.

Reference:

https://youtu.be/SyQQt0jzLu4

10.3 PROJECT 2 - Bridge rectifier

Title of the project

Construction of a Bridge Rectifier

Aim:

To construct a Bridge Rectifier with the help of available simple electronic components.

Components required:

S. No	Tools and Materials	Range / Value	Quantity
1.	Breadboard Jumper	-	As required
2.	Diode	IN4007	4Nos
3.	Load	LED	1
4.	Breadboard or dot board	-	1
5.	AC Power supply	9v	1
6.	Soldering kit	-	1
7.	Capacitor	470µF	1

Connection diagram:

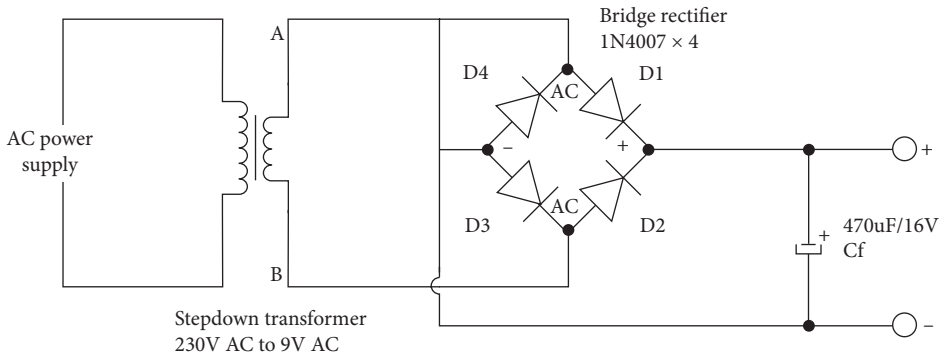

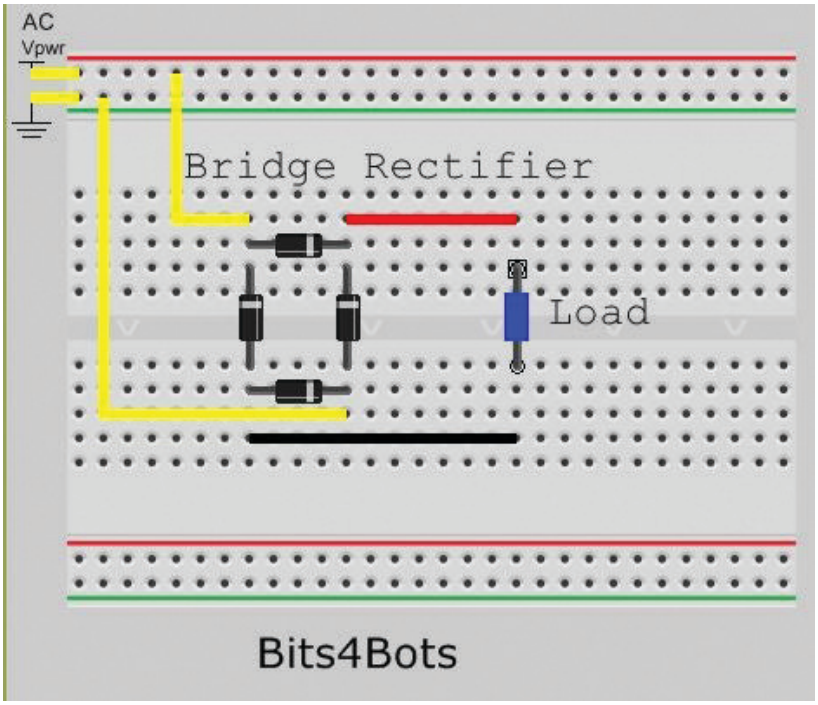

Procedure:

1. Select two 1N4007 diodes and make an "L" shape with the cathode of the two diodes (the ends with white bands).
2. Repeat the same to the other two diodes which make an "L" shape with the anode of a diode (the ends without white bands).
3. Connect the set of the assembled diode as a bridge in a box shape, as shown above.
4. Connect a 9V AC input voltage as the source for the power supply.
5. Finally connect the load (LED)

Result:

Now I have completed the project bridge rectifier abiding the procedure.

Reference:

https://www.instructables.com/Make-A-Bridge-Rectifier-From-Diodes/

https://content.instructables.com/FCG/VT95/I24LZHH8/FCGVT95I24LZHH8.gif?format=mp4

10.4 PROJECT 3 - Smart cell phone jammer

Title of the project:

Smart cell phone jammer circuit.

Aim:

To design and build a smart cell phone jammer circuit

List of components required:

S. No	Tools and Materials	Range / Value	Quantity
1.	Dot Board/ Breadboard	-	1
2.	Battery	3.7V- 4V	1
3.	On/Off switch	-	1
4.	Transistor	BF 495	1
5.	Resistor	39KΩ, 100Ω	1 each
6.	Capacitor	4.7pF	2Nos
7.	Capacitor	104pF	2Nos
8.	Capacitor	22pF	1
9.	Capacitor	15pF	1
10.	Capacitor	1pF	1
11.	Copper wire antenna	25 round	1
12.	Inductor coil	20 Turn	1
13.	Soldering kit	-	1
14.	Black wire, Red wire	1m	1 each

Connection diagram:

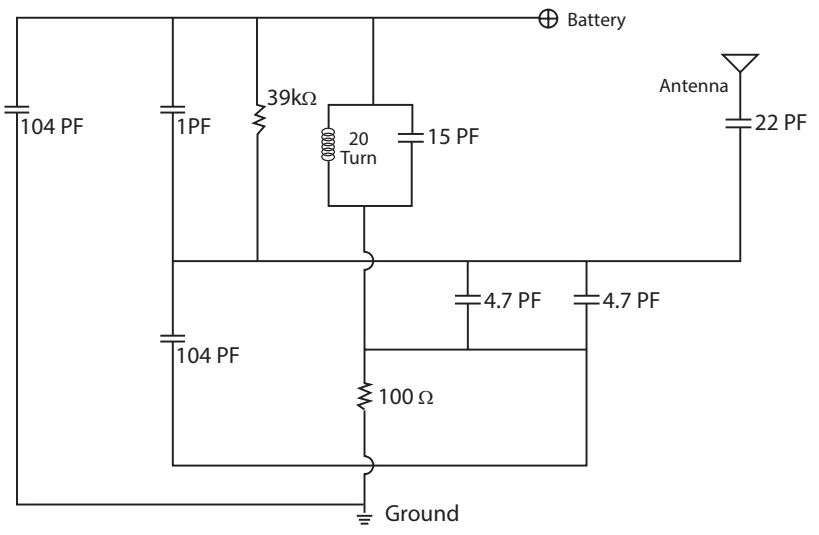

PROCEDURE:

- Insert the components in the dot board as per the connection diagram.
- Solder the components with the help of soldering iron.
- Connect the battery and ground using red and black wire respectively.
- Place the Cell phone near the jammer circuit.
- When we turn ON the switch of jammer circuit, the mobile network will be automatically cut off.
- When we turn OFF the switch of jammer circuit, the mobile network will automatically be activated.
- If the circuit is not working, just increase the value of resistance and capacitance in the circuit. Increase the frequency of tuned circuit by using this formula F = 1/ (2 x pi x (LC)). To increase the frequency value, the inductance and the capacitance value can be increased.

Result:

The project smart cell phone jammer was done with all the necessary components. Now the project is working in good condition.

Reference:

https://youtu.be/CezuofhbG9w

10.5 Conclusion

These devices are good interesting real-time project which helps in implementing new ideas using advanced technology of the project. The learning outcome of the project idea is just a model. Beyond this, students can develop their own innovative project ideas which is different from an existing project.

Model Question Paper

Basic Electrical Engineering – Theory

STANDARD XII **MARKS: 90**

Time: 3.00 Hours XII – Standard

PART – A

Choose the correct answer: **15 x 1 = 15**

1. Which of the following is not the distribution system?
   a) 3 phase - 4 wire b) 3 phase - 3 wire
   c) Single phase - 3 wire d) Single phase - 4 wire
2. Generally which conductor is used for overhead line transmission _____
   a) Steel b) Copper
   c) Aluminium d) ACSR
3. Which of the following metals are both malleable and ductile_____
   a) Copper b) Cast iron
   c) Porcelain d) Zinc
4. The armature is made up of
   a) Solid aluminium b) Solid steel
   c) Laminated aluminium d) Laminated steel
5. Squirrel cage induction motors are used in
   a) Mixie b) Hair drier c) Fans d) Electric pump
6. In four point starter, how the no volt release coil should be connected with field coil.
   a) in series b) in shunt c) directly d) parallel
7. What should be done to obtain the increase speed in three point starter?
   a) Increase resistance value
   b) Field current value should be change
   c) Decrease resistance value
   d) Voltage should be maintained

8. Which is the component is used for voltage regulating in soft starter?
   a) Over load relay b) No volt release coil
   c) thyristor d) contact pointers

9. The speed of the DC drive depends on _____
   a) Current b) Voltage c) Frequency d) Power

10. Panel board divides electric power into sub circuits with a separate ----- ----
   a) Relay b) Circuit breaker
   c) Switch d) Device

11. Bus bar conductors are made of ----- -----
   a) Iron b) Zinc c) Lead d) Copper

12. Which law is applicable to know the direction of current in a DC motor?
   a) Fleming's right hand rule b) End rule
   c) Fleming's left hand rule d) Ohm's law

13. The distance between the starting ends of two adjacent coils is
   a) Front pitch b) Back pitch
   c) Coil pitch d) Pole pitch

14. In pipe earthing, the pipe is made of ----------
   a) Steel b) Copper c) Galvanised iron d) Iron

15. Lightning arrester is used to provide a path to the static electric discharge between ----------
   a) Charged clouds and phase b) Charged clouds and neutral
   c) Charged clouds and earth d) Charged clouds and storage supply

PART – B

Answer any TEN questions. Q. No. 28 is compulsory. 10 x 3 = 30

16. Write short notes on ACSR conductor.

17. Write down the thermal properties of materials.

18. State the applications of DC series motor.

19. State the difference between three point and four point starter.

20. Why single phase motor is not a self starting?

21. What is meant by 'slip speed'?

22. State variable frequency drive.

23. What are the properties of overhead line conductors?

24. What are the components used in bus way system?

25. What are the devices used to measure the thickness of conductors.

26. What is called pole pitch?

27. What is meant by voltage stabilization?

28. State the different types of stepper motor.

PART – C

Answer any FIVE questions. Q. No. 35 is compulsory **5 x 5 = 25**

29. What are the main objectives, advantages and disadvantages of underground cable for power distribution?

30. Draw the circuit diagram of DC shunt and series generators.

31. What are the applications of following motors?

    a. Spilt phase motor b. Universal motor

32. Define speed control methods.

33. Explain the functions of individual electric drive.

34. What are the three types of windings used in AC machines?

35. Write down the working principle of lightning arrester.

PART – D

Answer the following questions. Draw the diagrams wherever necessary. **2 x 10 = 20**

36. Explain with a neat diagram about the construction of the DC machines.

(or)

Explain with neat sketch about universal motor.

37. Explain the working principle of DC drive with suitable diagram.

(or)

Explain the safety measures followed in earthing with suitable diagram.

Basic Electrical Engineering

PRACTICAL

CONTENTS

Basic Electrical Engineering - PRACTICAL

Exercise No.	Chapter Title	Page No.	Month
1	Dismantling and Assembling of DC machine	139	June
2	Connect, Start and Run the DC shunt motor using a three-point starter	143	June
3	Dismantling and Assembling of Single-phase capacitor start induction motor	146	July
4	Dismantling and Assembling of Three-phase squirrel cage induction motor	149	July
5	Connect, Start and Run the three-phase squirrel cage induction motor using DOL Starter	152	July
6	Connect, start and run the three-phase squirrel cage induction motor using star delta starter	154	August
7	Practice on crimping underground armoured cable of 4 core 16 sq.mm cable	157	August
8	Fault finding in 4 core armoured cable using Megger	161	September
9	Control the speed of three phase induction motor using a variable frequency drive (VFD)	163	September
10	Identify the various components in the existing control panel	166	October
11	Wire up the control panel for the given circuit	171	October
12	Draw and test the ladder diagram for staircase wiring in Programmable Logic Controller (PLC)	176	November
13	Draw and test the ladder diagram for Automatic ON and OFF by using timers in PLC	178	November
14	Prepare pipe earthing and measure its resistance by using Megger	180	December
15	Practice Soldering and De-soldering techniques with different electronic component	184	December

PRACTICAL

01

Dismantling and Assembling of DC machine

AIM

To know the method of Dismantling and Re-assembling the DC machine practically.

PRACTICAL PROCEDURE:

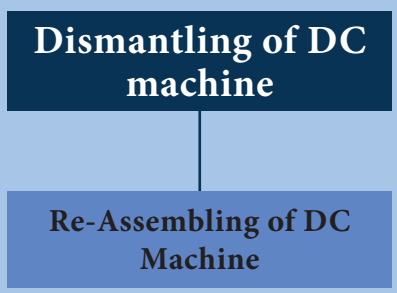

TOOLS AND MATERIALS REQUIRED:

S.No	Tools and Materials	Range / Value	Quantity
1	Pulley puller	6 inches	1 No
2	Hammer	500 grams	1 No
3	Combination plier	200 mm	1 No
4	Centre punch	100 mm length	1 No
5	Spanner set	5mm to 20 mm	1 Set
6	Screwdriver	-	Complete set
7	DC machine	5 KW	1 No
8	Multimeter	AC /DC	1 No
9	Cotton waste	-	Required quantity
10	Kerosene	-	1 litre

Procedure:

Task 1: Dismantling of DC machine

Step 1: Make punch marks on both the end plates and yoke, so that the original position may not be changed while assembling.

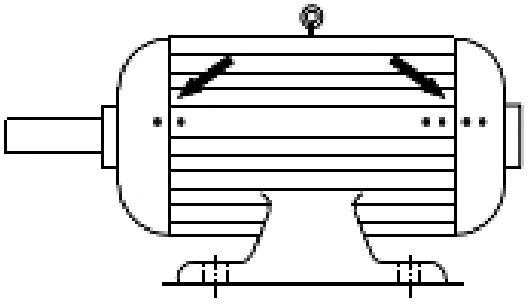

Identification punch marks

Step 2: Mark the rocker arm position with respect to the end plate.

Step 3: Remove the brushes from the brush-holder

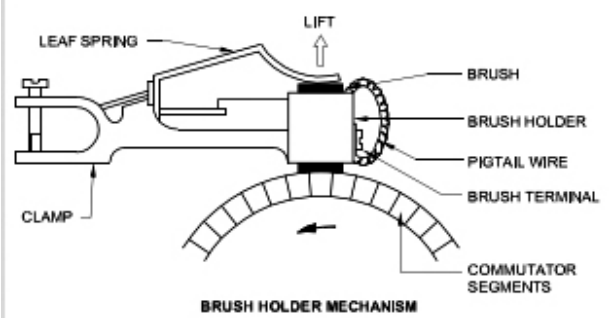

BRUSH HOLDER MECHANISM



Step 4: Remove the pulley with a pulley puller. If the pulley is found tight, check the tightness of the pulley and adjust it.

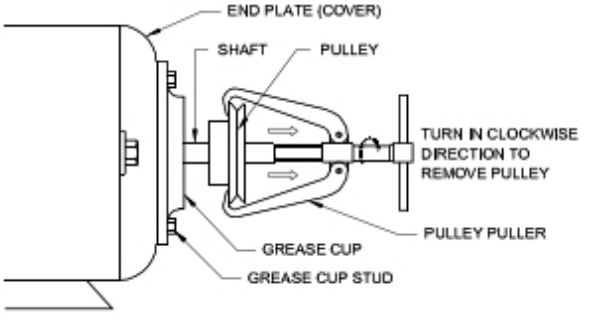

REMOVAL OF THE PULLEY

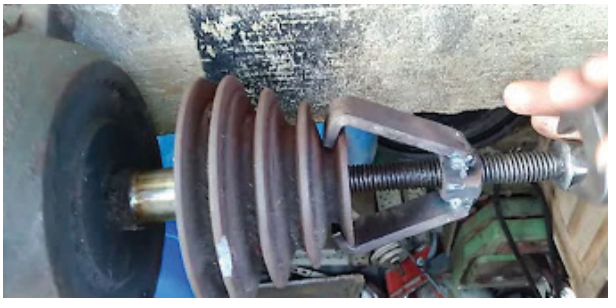

Step 5: Remove the grease cup stud and open it.

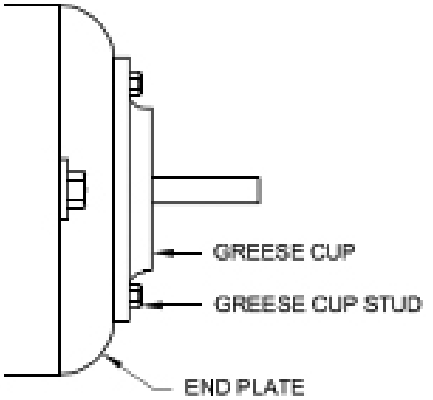

REMOVAL OF THE GREESE CUP

Step 6: Loosen the studs of both the end plates and then remove the shaft.

Step 7: Remove the armature from the body of the DC machine.

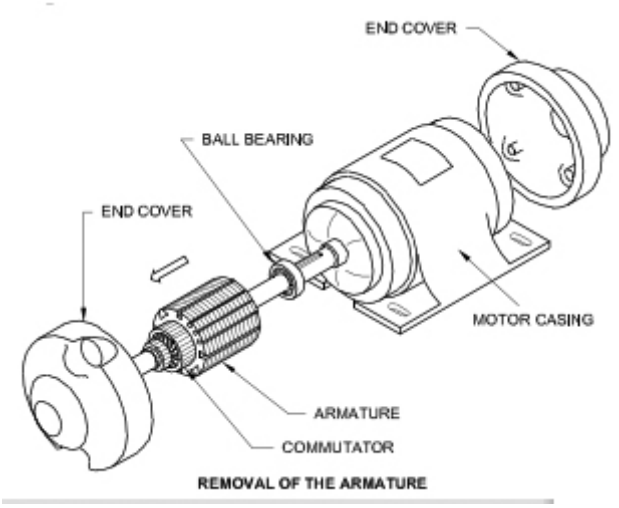

REMOVAL OF THE ARMATURE







Step 8: Check the bearings for wear and tear, breakage or stop or delay.

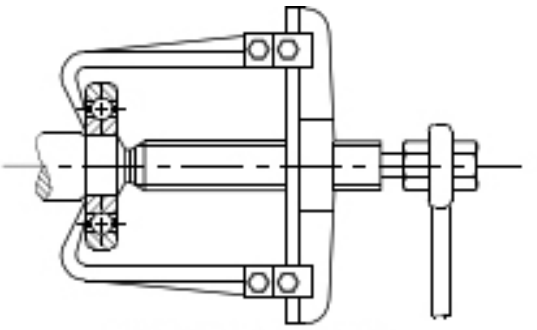
REMOVAL OF THE BEARING

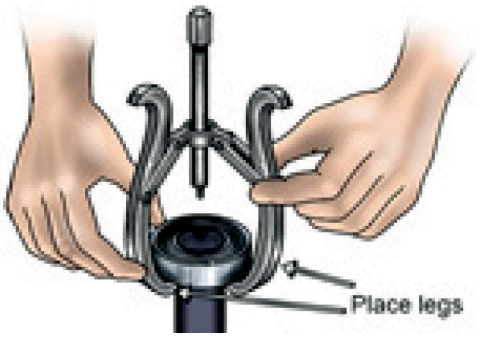

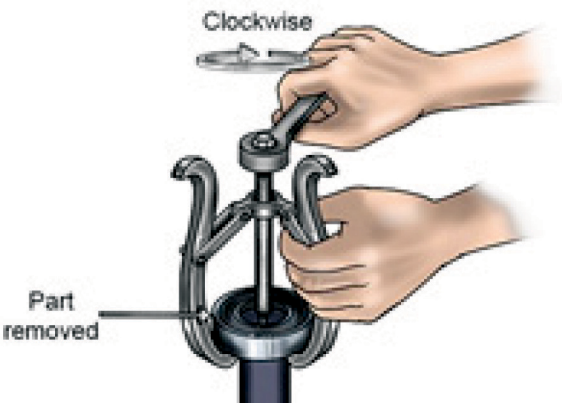

Step 9: Clean the bearings. If the bearings are found defective, replace it.

Step 10: Grease the bearings and fix them to the shaft above the bearing by hammering with a metal tube of mild steel for further insertion.

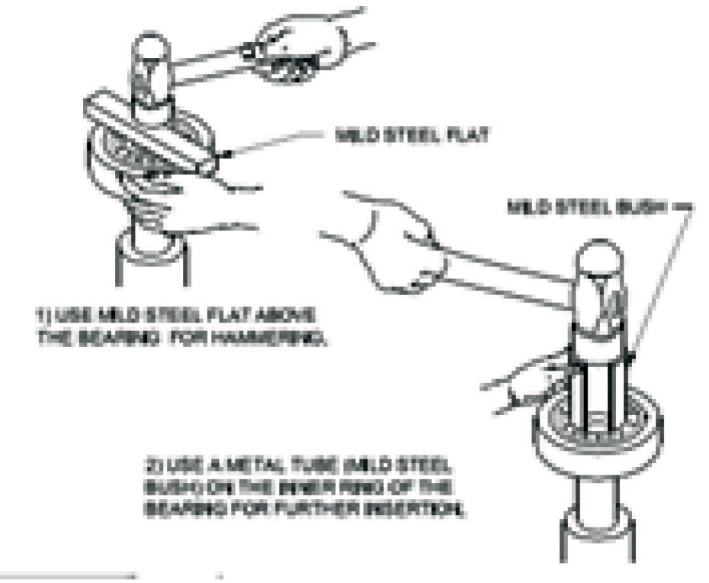

Step 11: Clean the yoke and armature with a brush and air blower.

Task2: Re-Assembling of DC Machine

Step 1: Reassemble the yoke, armature and end plates.

Step 2: Check the freeness of the shaft by rotating it by hand.

Step 3: If you feel it is tight, loosen the end-plate studs and tighten it gradually in the proper sequence, till the shaft rotates freely.

Step 4: Insert the brush in the holder, adjust the brush tension as per the procedure.

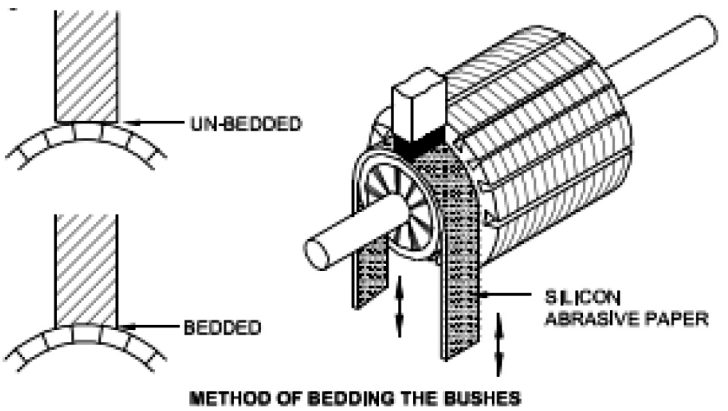

METHOD OF BEDDING THE BUSHES

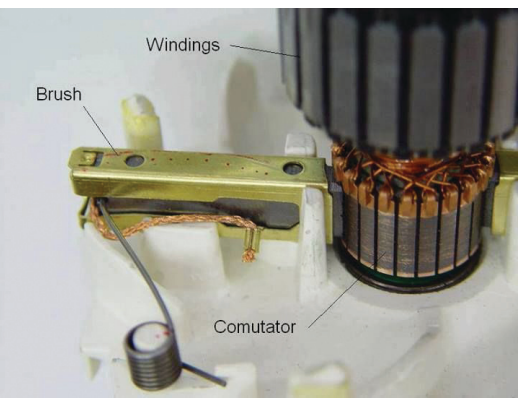

Step 5: Position the rocker arm in the end plates as per the marking.

Step 6: Check the DC machine is operating smoothly without any vibration or noise.

Step 7: Connect the machine with DC supply to run it as a motor or couple the machine with a motor to run as a generator.

RESULT:

I have known the method of dismantling and re-assembling of the DC machine practically as per the procedure.

PRACTICAL

02

Connect, Start and Run the DC shunt motor using a three-point starter

AIM

To connect, start and run the given DC shunt motor by using the three-point starter.

PRACTICAL PROCEDURE:

Connect the DC shunt motor with a three-point starter and check the functioning of motor

TOOLS AND MATERIALS REQUIRED:

S.No	Tools and materials	Range / Value	Quantity
1	DC Shunt Motor	3 Hp, 220V	1 No
2	3-point starter	AS per specifications to 3HP motor	1 No
3	Combination plier	200mm	1 No
4	Screw Driver	4 × 200mm	1 No
5	Wire stripper	150 mm	1 No
6	Test Lamp	230V, 40W	1 No
7	PVC multi-strand copper wire	2.5 Sq mm	8 m
8	ICDP (or) MCB	20 Amps	1 No

Procedure:

Step 1: Open the 3-point starter, trace the connections and sketch the internal parts.



Step 2: Connect the DC shunt motor as per the circuit diagram.

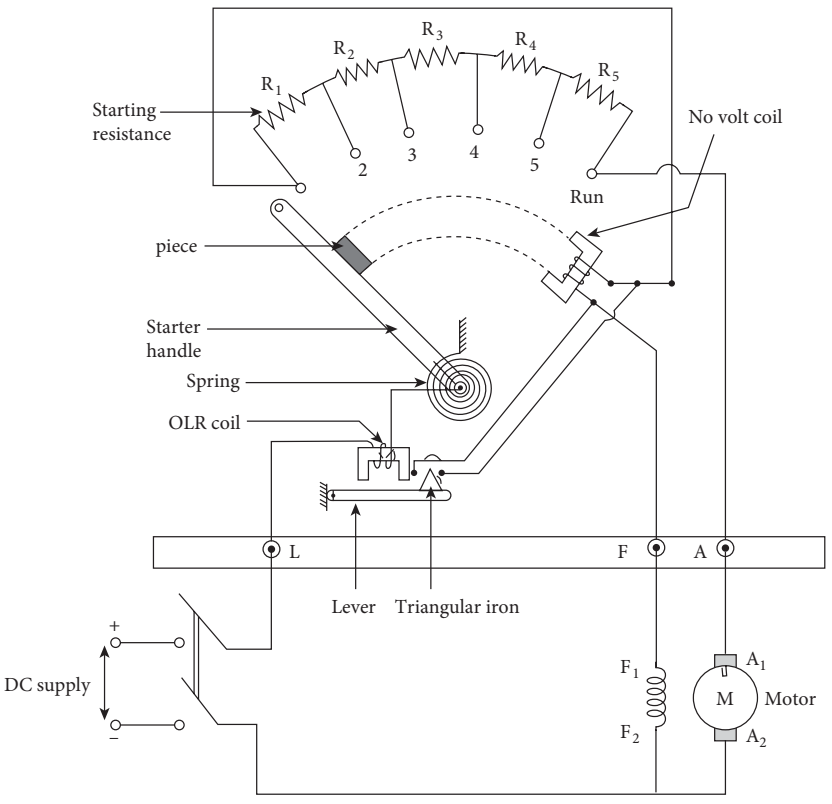

Step 3: Switch `ON' the ICDP or MCB and gradually to move the starter handle into the `ON' position.

Step 4: By switching `OFF' with ICDP or MCB the motor gets stopped.

Result:

The method of connecting, starting and running the given DC shunt motor by using three-point starter was known.

PRACTICAL

03

Dismantling and Assembling of Single-phase capacitor start induction motor

AIM

To dismantle and re-assemble the Single-phase capacitor start induction motor

PRACTICAL PROCEDURE:

Dismantling the Single-phase motor

Re-Assembling the single-phase motor

TOOLS AND MATERIALS REQUIRED:

S. No	Tools and Materials	Range / Value	Quantity
1	Single phase capacitor start induction motor	230V, AC, 1 Hp	1 No
2	Pulley puller	6 inches	1 No
3	Bearing puller	3 legs	1 No
4	Hammer	500 grams	1 No
5	Combination pliers	200 mm	1 No
6	Centre punch	100 mm length	1 No
7	Spanner set	5 mm to 20 mm	1 set
8	Screwdriver	4 × 200mm, 6 × 200mm	Each 1 No
9	Waste Cotton cloth	-	As Required

Procedure:

Task 1: Dismantling the single phase motor

Step 1: Make punch marks on both the end plates and yoke, so that the original position may not be changed while assembling.

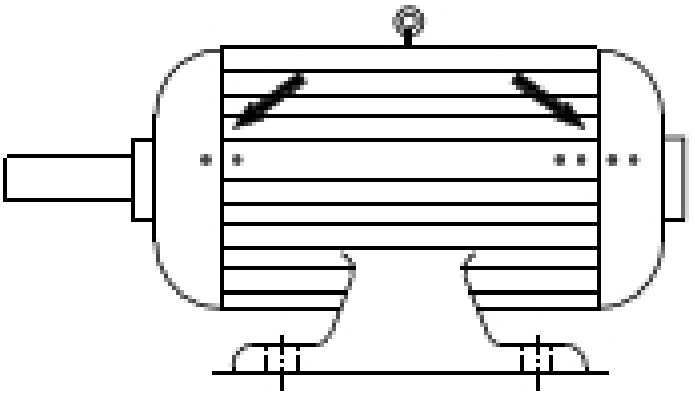

Identification punch marks

Step 2: Identify the terminal box and note down the capacitor terminals.

Step 3: Remove the capacitor from the terminals.

Step 4: Remove the pulley from the shaft with a pulley puller.

Step 5: Unscrew all the bolts one by one at the end of the cover.

Step 6: Pull the rotor from the stator.

Step 7: Remove the bearings from the shaft by using a bearing puller.

Step 8: Identify the dismantled parts as given below.

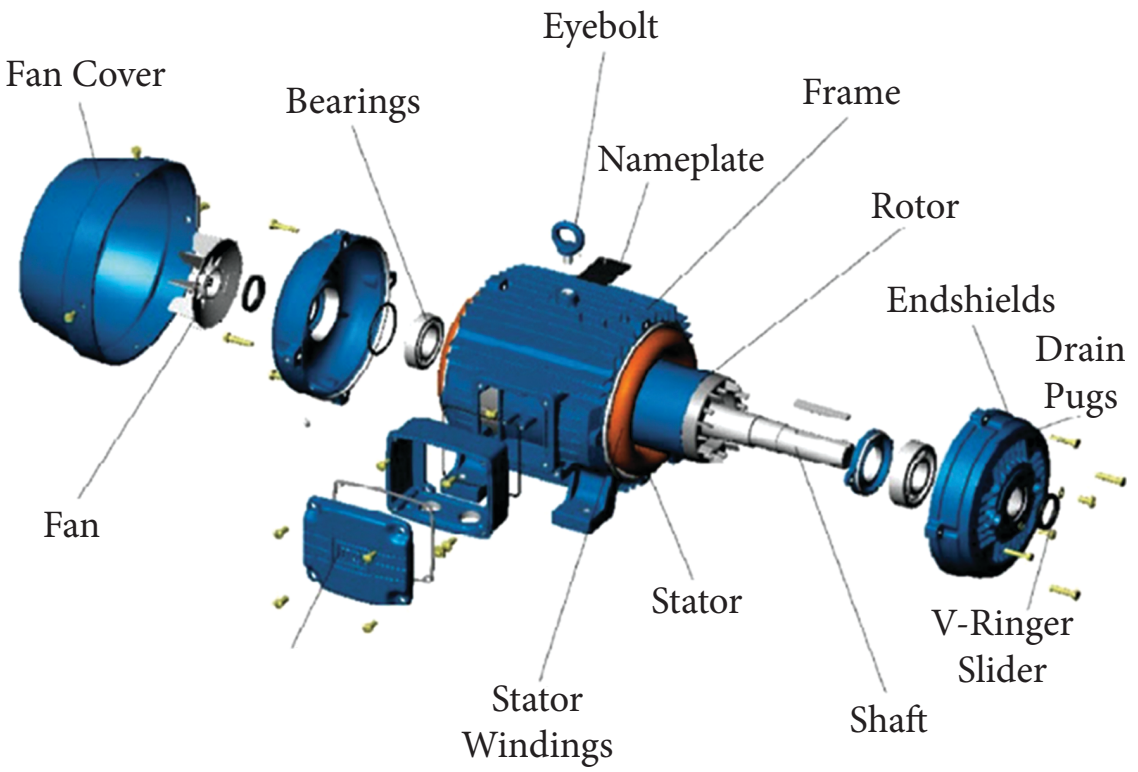

Task 2: Re-assembling the single-phase motor

Step 1: Reverse the dismantling process for reasembling and connect the terminals as per the circuit diagram.

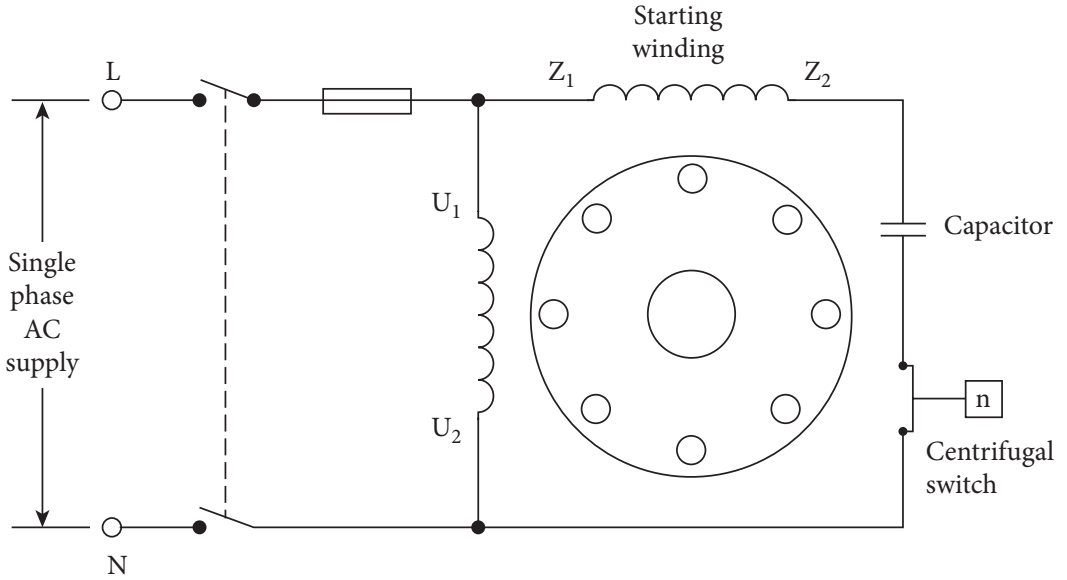

Step 2: Connect the motor with single-phase power supply and ensure it is working.

Result:

The method of dismantling and re-assembling the Single-phase capacitor start induction motor was done and the motor is in good condition.

PRACTICAL

04

Dismantling and Assembling of Three-phase squirrel cage induction motor

AIM

To dismantle and re-assemble the three-phase squirrel cage induction motor

PRACTICAL PROCEDURE:

Dismantling the three-phase induction motor

↓

Re-Assembling the three-phase induction motor

TOOLS AND MATERIALS REQUIRED:

S.No	Tools and Materials	Range / Value	Quantity
1.	Squirrel cage induction motor	3 Phase 3Hp	1 No
2	Spanner	5 mm to 30 mm	1Set
3	Ring spanner	5 mm to 30 mm	1 Set
4	Chisel	25 mm x 200 mm	1 No
5	Ball peen hammer	500 grams	1 No
6	Nylon mallet	75 mm x 100 mm	1 No
7	Pulley puller	200 mm with 3 jaws	1 No
8	Centre punch	10 mm x 150 mm	1 No

9	Insulated cutting plier	200mm	1 No
10	Allen key	Standard size	1 set
11	Cotton cloth	-	As Required

Procedure:

Task 1: Dismantling the three-phase induction motor

Step 1: Remove the shaft by holding the pulley.

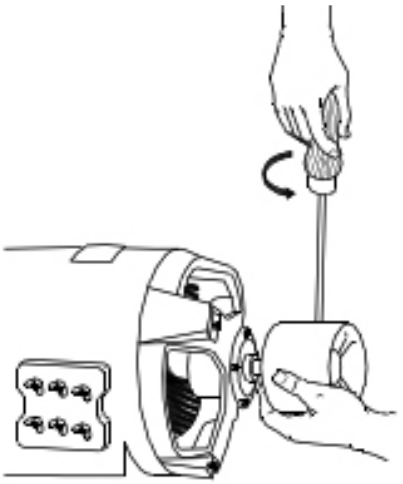

Step 2: Remove the pulley by using a suitable pulley puller.

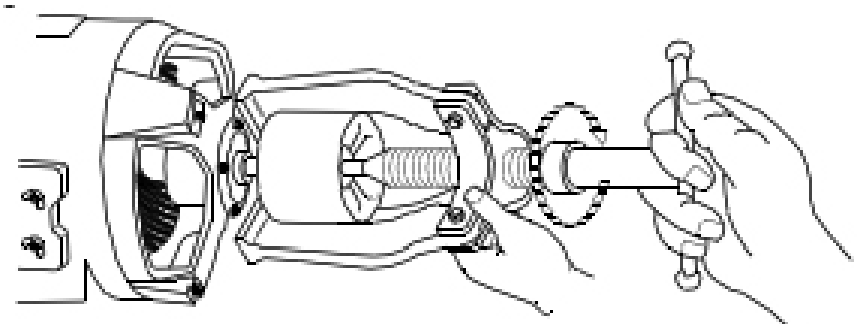

Step 3: Make a centre punch alignment mark on the stator and the end cover for easy identification while re-assembling. To avoid confusion make a single punch mark on one side and a dual punch mark on the other end of the end cover.

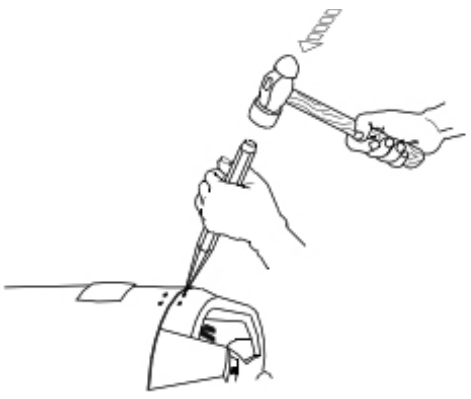

Step 4: Remove the grease cup screw.

Step 5: Loose the bolts gradually till they are removed.

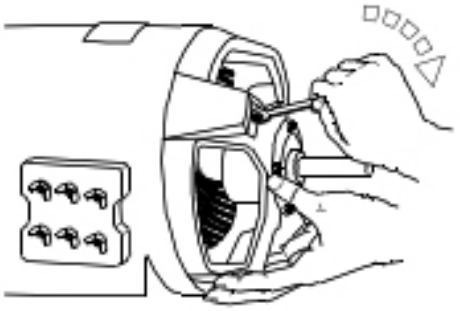

Step 6: Keep the chisel tip between the stator and cover by gently chisel with a hammer and separate the stator and the end cover.

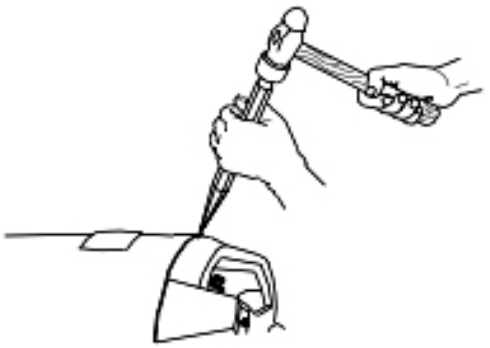

Step 7: Pull the end cover and rotor together, parallel to the motor shaft.

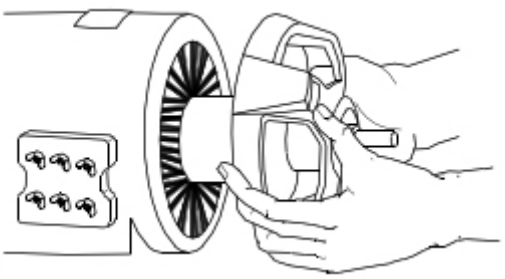

Step 8: Hold the shaft in one hand, rotate the end cover and tap it lightly with a nylon mallet to remove it from the rotor.

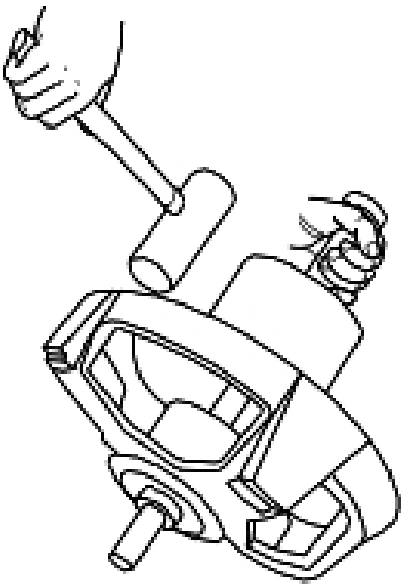

Step 9: Remove the other end cover also.

Step 10: Check the rotor and bearings are in good condition.

Step 11: Dismantled parts are given below.

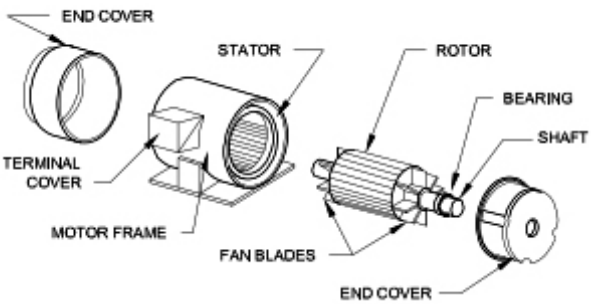

Task 2: Re-assembling the three phase induction motor

Step 1: Reverse the dismantling process for re-assembling.

Step 2: Connect the motor with starter in three phase supply and check whether it is in working condition.

Result:

The method of dismantling and re-assembling three-phase squirrel cage induction motor was done in scheduled procedure.

PRACTICAL

05

Connect, Start and Run the three-phase squirrel cage induction motor using DOL Starter

AIM

To connect, start and run the three-phase squirrel cage induction motor by using DOL starter.

PRACTICAL PROCEDURE:

Connect, start and run the squirrel cage motor by using DOL starter

↓

Tabulate the reading

TOOLS AND MATERIALS REQUIRED:

S.No	Tools and Materials	Range / Value	Quantity
1	Squirrel cage Induction motor	415V, 3Hp	1 No
2	DOL starter	3Hp Motor	1 No
3	PVC multistrand copper wire	2.5 Sq.mm	10 m
4	Combination plier	200 mm	1 No
5	Wire stripper	150 mm	1 No
6	Screw driver	-	Complete set
7	Ammeter	(0 – 10) A (MI)	1 No
8	Voltmeter	(0 – 500) V (MI)	1 No
9	ICTP or 4 Pole MCB	10 Amps, 440 Volt	1 No

Procedure:

Task1: Connect, start and run the squirrel cage motor by using DOL starter

Step 1: Connect the motor with DOL starter as per the given circuit diagram.

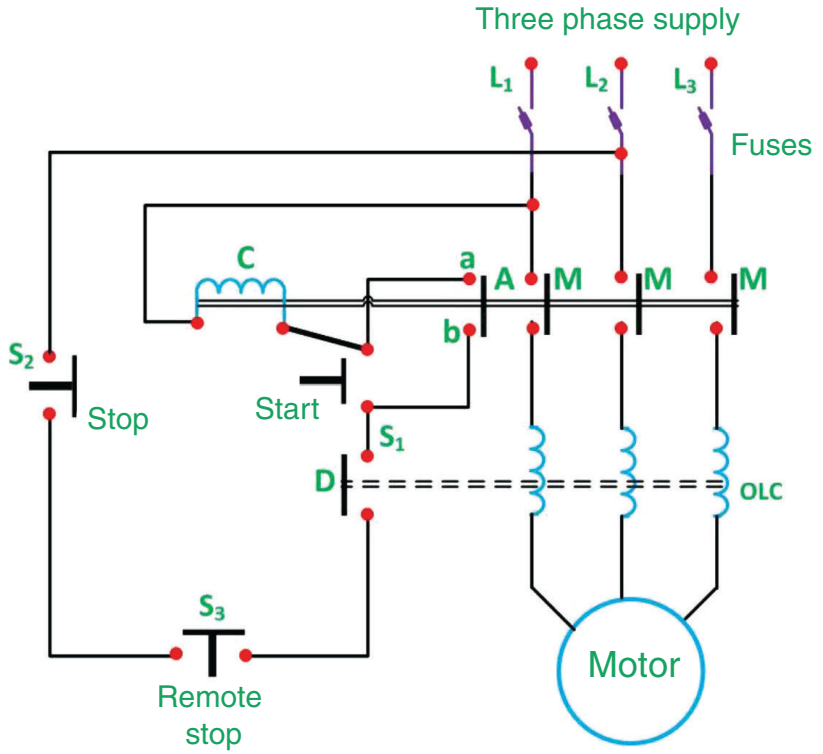

Step 2: Switch on the ICTP.

Step 3: Start the motor with the start button (S3) of the starter.

Step 4: Ensure the motor is running.

Step 5: Note the reading of current value in ammeter at the time of starting.

Step 6: Note the readings of voltmeter and ammeter when the motor is running in normal.

Step 7: Switch OFF the motor by using stop button(S2) of the starter.

Task 2: Tabulation

S. No	Starting current (In Amps)	Volt meter readings (In Volts)	Running Current (In Amps)

Result:

Squirrel cage induction motor was connected, started and made run by using DOL starter and tabulated the reading at normal speed.

PRACTICAL

06

Connect, start and run the three-phase squirrel cage induction motor using star delta starter

AIM

To connect, start and run the three-phase squirrel cage induction motor by using star delta starter.

PRACTICAL PROCEDURE:

Connect the motor with the given starter, check the direction of running and know the starter changes from star to delta

TOOLS AND MATERIALS REQUIRED:

S.No	Tools and materials	Range / Value	Quantity
1	Squirrel cage Induction motor	3ph, 5 Hp, 415V	1 No
2	Automatic star delta starter	For 3ph, 5Hp Motor	1 No
3	PVC multistrand copper wire	2.5 Sq.mm	10 m
4	Combination plier	200 mm	1 No
5	Wire stripper	150 mm	1 No
6	Screw driver	--	Complete set
7	ICTP or 4-pole MCB	440 V, 16 A	1 No

Procedure:

Step 1: Open the cover of the automatic star delta starter and know the circuit diagram given below.

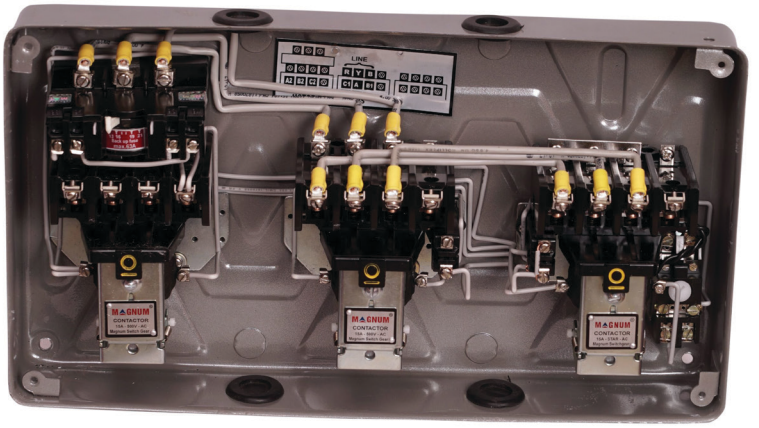

Step 2: Wire up the control circuit on the star-delta starter according to the circuit diagram given below.

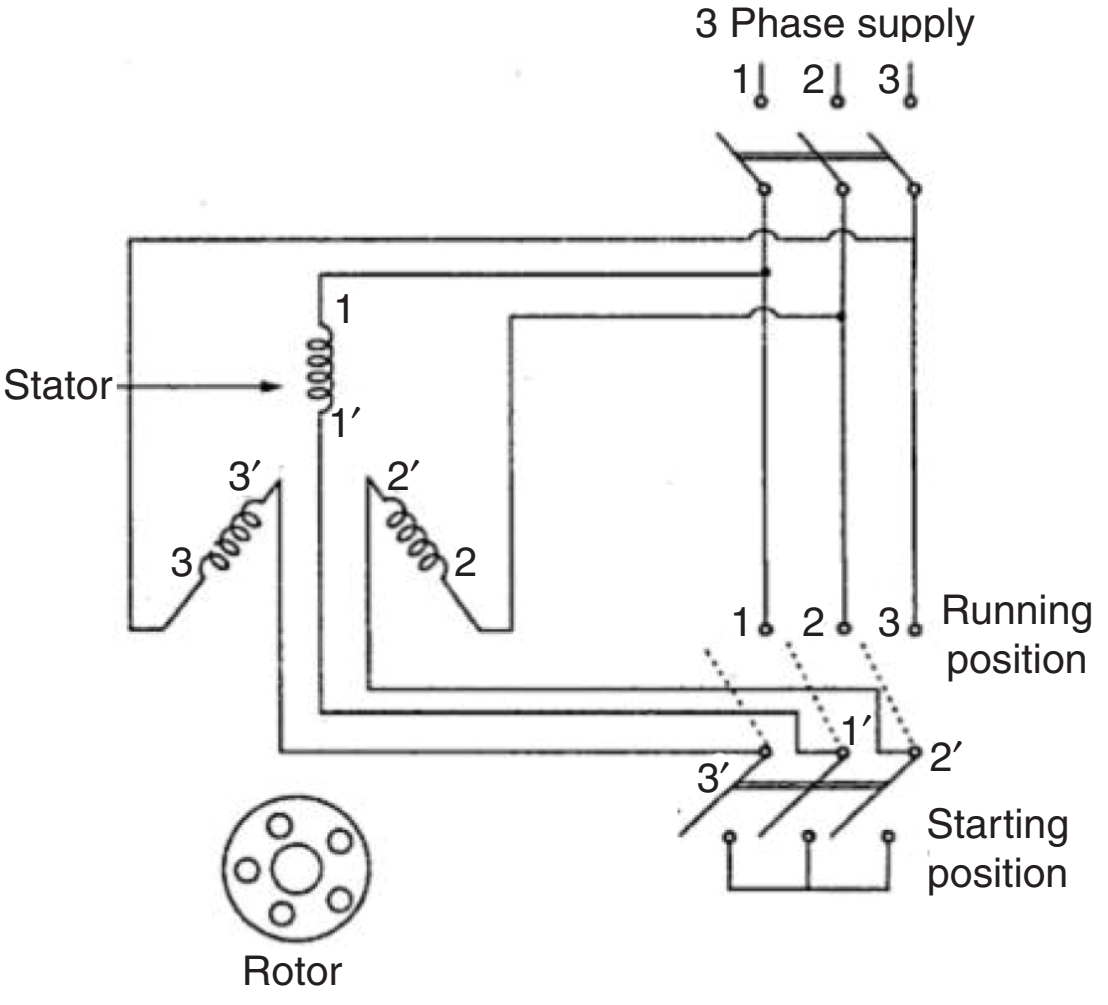

Step 3: Wire up the power circuit on the star-delta starter according to the circuit diagram given below.

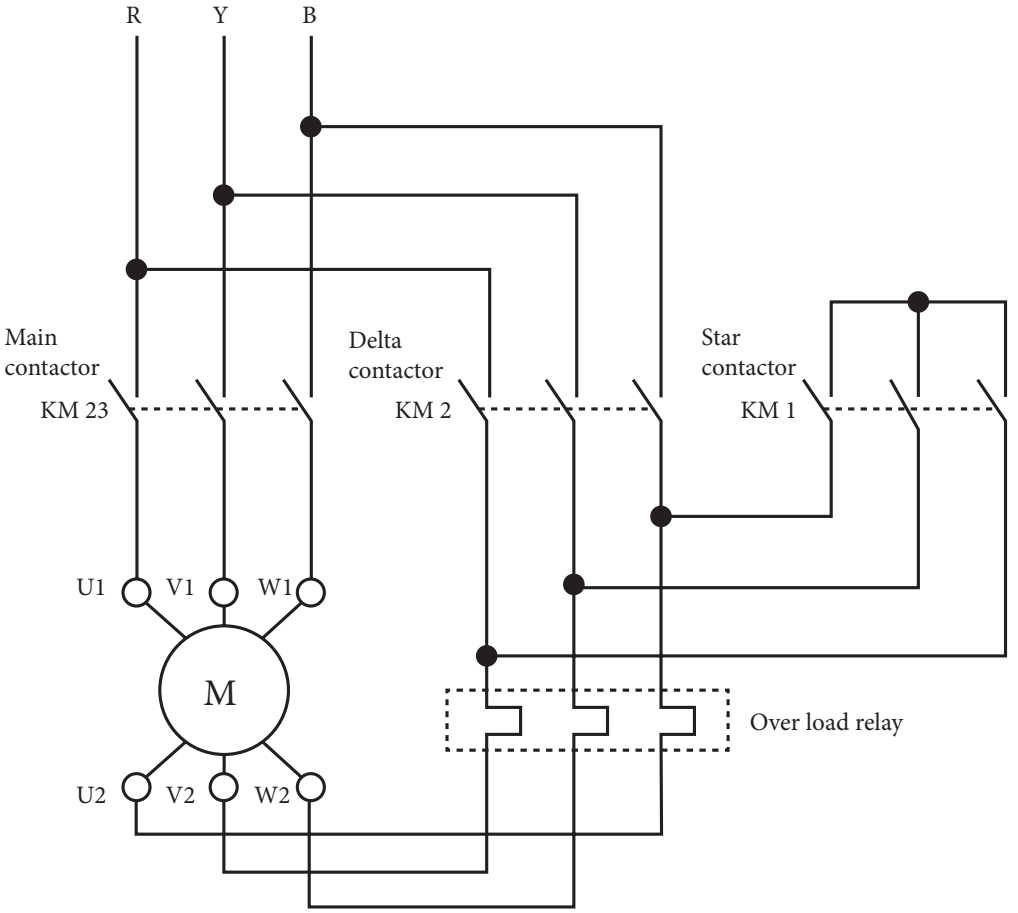

Step 4: Start the motor and observe while starting. Check the starter switch change over from star to delta within a few seconds.

Result:

The method of connecting, starting and runing of the three-phase squirrel cage induction motor by using star delta starter was done.

PRACTICAL

07

Practice on crimping underground armoured cable of 4 core 16 sq.mm cable

AIM

To undergo practice on crimping the underground cable of 4 core 16 square mm.

PRACTICAL PROCEDURE:

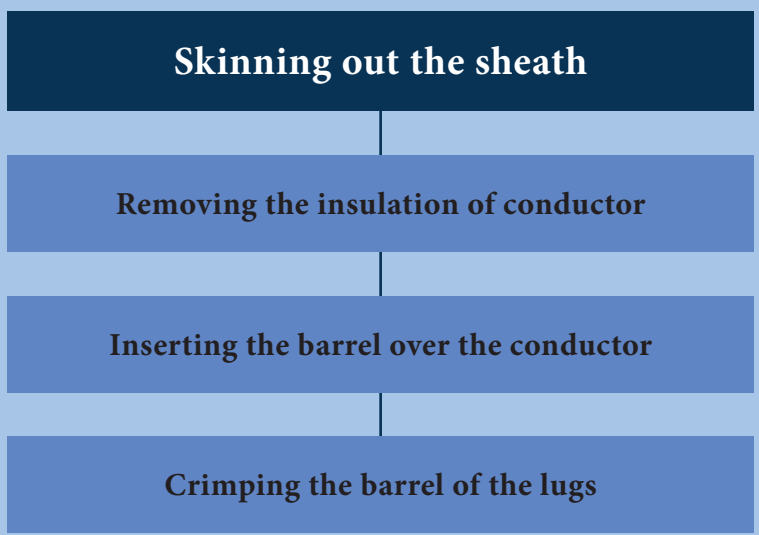

TOOLS AND MATERIALS REQUIRED:

S. No	Tools / Materials	Range	Quantity
1	Crimping tools	6 to 25 sq.mm	1no
2	Electrician knife	--	1no
3	Insulated side cutting plier	200 mm	1no

4	Hacksaw frame	300 mm	1no
5	Hacksaw blade	24 teeth 300mm	1no
6	Stainless steel tape	10mts	1no
7	Lugs	16 sq. mm long barrel	4 nos
8	PVC Insulation tape	(Red, Yellow, Blue, Black)10mts	Each 1no

Procedure:



Step 1: Measure 300 mm over the cable sheath and cut the sheath with Hacksaw and ensure it won't touch the armour.



Step 2: Remove the sheath with the knife.



Step 3: Cut the armour with the insulated cutter.



Step 4: Remove the PVC non adhesive tape.

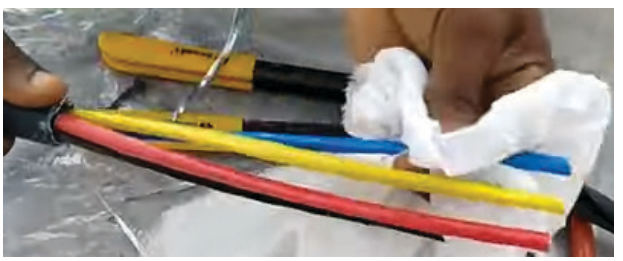

Step 5: Clean all the conductor insulation with cotton waste.



Step 6: Measure the length of the barrel placing over the insulation.



Step 7: Remove the insulation of the conductor.



Step 8: Insert the lug over the conductor.



Step 9: Adjust the crimping tools for 16 sq.mm crimp.



Step 10: Insert the lug in crimping tools and press the lever of the crimping tool.



Step 11: Repeat the crimping for all conductors.



Step 12: Ensure the lugs barrel is crimped properly.

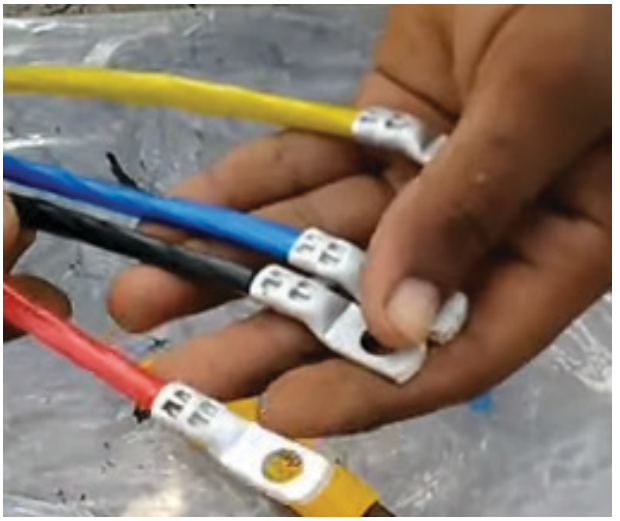

Step 13: Check all the Lugs properly crimped.



Step 14: Cover the lugs with insulation tape respect to the color of insulation.



Step 15: Ensure all the lugs are insulated with respect color.

Result:

Thus 4 core 16 sq.mm UG armoured cable conductor's lugs are crimped accordingly

PRACTICAL

08

Fault finding in 4 core armoured cable using Megger

AIM

To find the fault in 4 core armoured cable by using Megger.

PRACTICAL PROCEDURE:

Connect megger with the cable under fault

↓

Varying the probe of megger

TOOLS AND MATERIALS REQUIRED:

S.No	Materials	Range	Quantity
1	Megger with connecting probes	500 V (analog)	1 no
2	Test UG cable	As available	As required

Procedure:

Step1: Connect the Megger with test UG cable as shown in the figure.

Step2: Rotate the handle of the megger uniformly at rated speed and see the deflection of the pointer. Then note the reading in the table.

Step3: Varying the terminal of megger with UG Cable, note the reading in the table.

Step4: Ensure all the conductors and armoured are tested.

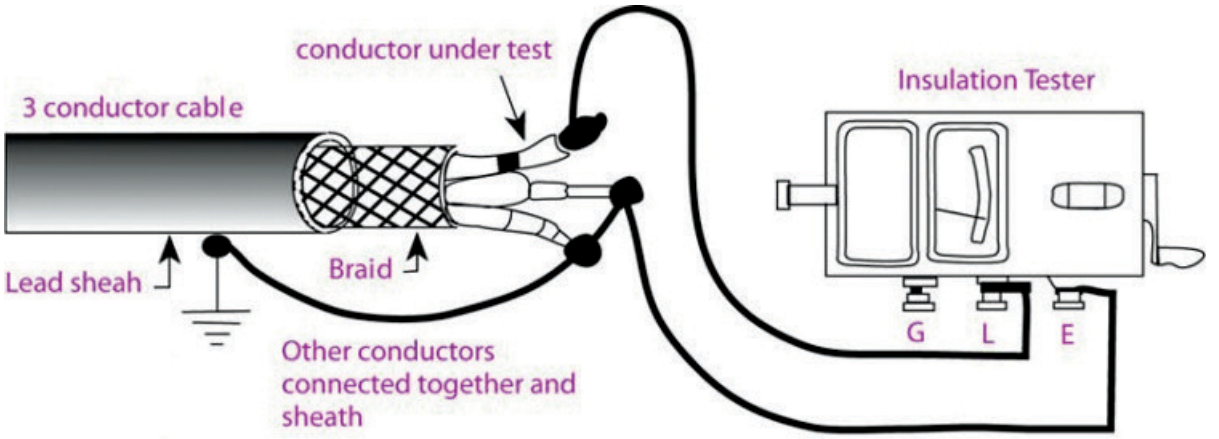

Tabulation

Connection of probe with UG cable	Megger reading
Between conductors Conductor 1 and conductor 2 Conductor 2 and conductor 3 Conductor 1 and conductor 3	
Between earth and conductors Conductor 1 and earth Conductor 2 and earth Conductor 3 and earth Conductor 1, 2, 3 shorted and earth	

Result:

If the reading of the Megger shows a very low value, it indicates no short circuit. If it shows an infinity value then it indicates a short circuit in the UG cable.

PRACTICAL

09

Control the speed of three phase induction motor using a variable frequency drive (VFD)

AIM

To control the speed of three phase induction motor by using variable frequency drive (VFD).

PRACTICAL PROCEDURE:

Connect the motor with VFD Drive

↓

Controlling the speed of motor by varying frequency

TOOLS AND MATERIALS REQUIRED:

S.No	Tools and materials	Range / Value	Quantity
1	Three-phase induction motor	Squirrel cage 3PH, 3 HP, 415 v	1 No
2	VFD drive	For 3phase, 3 HP motor	1 No
3	MCB	4 Pole, 20 Amps	1 No
3	Tacho meter	3000 rpm	1 No
4	Combination plier	200 mm	1 No
5	Screw driver	4mm, 5 mm	Each 1 No
6	Wire stripper	150 mm	1 No
7	Multi-strand copper wire	2.5 Sq.mm	5 m

Procedure:

Step 1: Read the VFD manual carefully and ensure the drive is suitable for the specifications specified in the motor.



Step 2: Identify the input and output terminals of the VFD drive.

Step 3: Connect the three-phase input supply at the input terminals of the VFD via MCB.

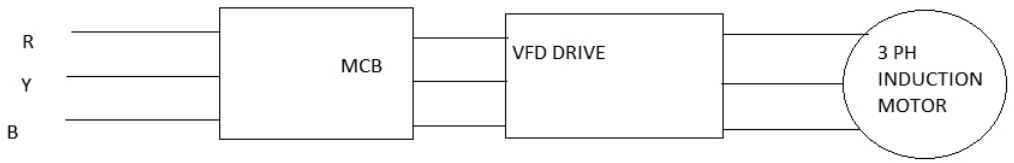

Step 4: Connect the output terminals of the drive to the input of the motor.



Step 5: Fix the sensor facing the motor pulley and connect the other end of the sensor to the VFD drive in correct provision.

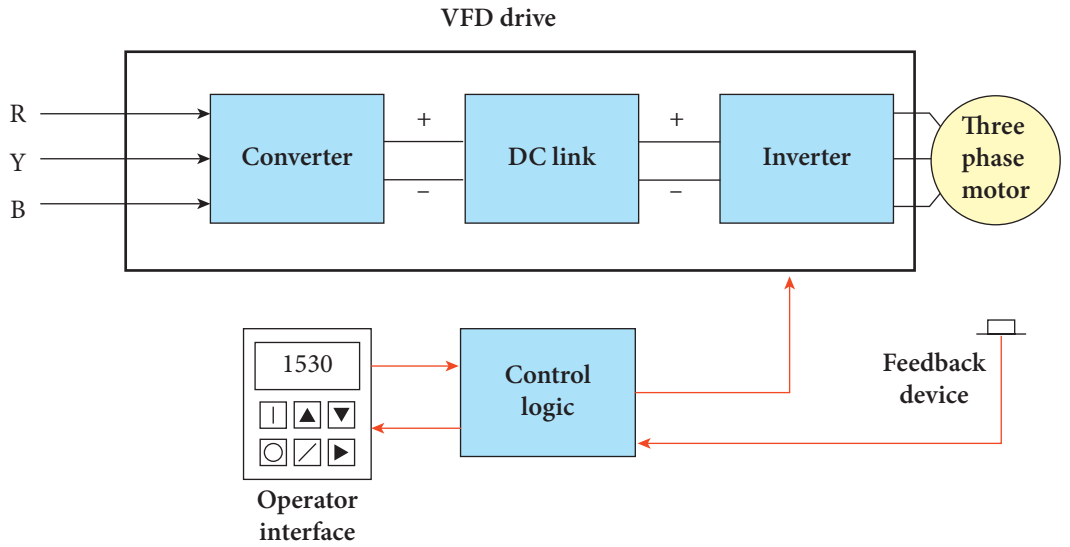

Step 6: Switch the power supply ON.

Step 7: Set the frequency at different values and note down the speed below and check the speed variations with frequency.

Tabulation:

S.No	Frequency in Hz	Speed in RPM
1		
2		
3		
4		
5		
6		

Result:

Thus, the speed of three phase induction motor is controlled by using variable frequency drive.

PRACTICAL

10

Identify the various components in the existing control panel

AIM

To identify the various components in the existing control panel.

PRACTICAL PROCEDURE:

Identify the components in the panel

↓

Note down the reading in the table

TOOLS AND MATERIALS REQUIRED:

S. No	Tools and materials	Range	Quantity
1	Panel box	As required	1 no
2	Contactor	240V, 4 pole,16A	3 no
3	Timer relay	-	1 no
4	Push button	Green, red, blue	Each 1 no
5	Indicator lamp with holder	-	5 no
6	Overload relay	415V, 0-15A	2 no
7	MCB	415V, 3 Pole 25A	1 no
8	Copper wire multistrand	2.5 Sq.mm	10 m

9	Race ways	--	2 m
10	Wire clips	--	As required
11	Terminal connectors	16 Amps	As required
12	Wire ferrule	--	As required
13	Grommets	--	As required
14	Cable binding straps and buttons	--	As required
15	Nylon cable ties	--	As required

Procedure:

Task: 1.

Identifying the control panel components



List of components	Identification of the components
	
	

List of components	Identification of the components
	
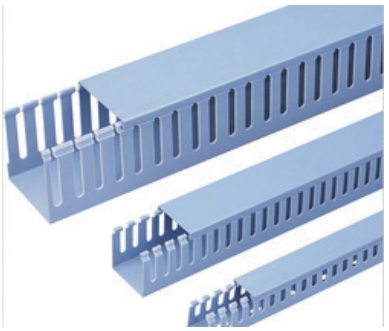	
	
	
	

List of components	Identification of the components
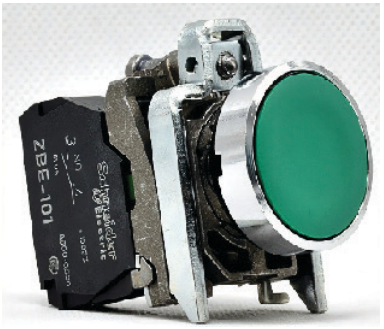	
	
	
	
	

List of components	Identification of the components
	
	
	

Result:

Thus the various components in the control panel are identified and specified in the table.

PRACTICAL

11

Wire up the control panel for the given circuit

AIM

Connect the circuit in the control panel with the given automatic Star delta starter to run three phase induction motor

PRACTICAL PROCEDURE:

Draw the circuit diagram

↓

Fix the accessories on the panel

↓

Wire up the components as per the circuit diagram

↓

Start and run the motor

TOOLS AND MATERIALS REQUIRED:

S.No	Tools and materials	Range	Quantity
1	Panel box	As required	1 no
2	Three phase induction motor	415 volt, 3 phase, 5HP	1 no

3	Contactor	240V, 4 pole,16A	3 no
4	Timer relay		1 no
5	Hand drilling machine	6mm capacity	1 no
6	HSS drill bit	6mm & 3mm	1 no
7	Hacksaw blade with frame	300 mm	1 no
8	Crimping tool	200mm	1 no
9	Combination plier	200 mm	1 no
10	Screw driver	4mm, 5mm, 6mm	Each 1 no
11	Wire stripper	150 mm	1 no
12	Push button	Green, red, blue	Each 1 no
13	Indicator lamp with holder	-	5 no
14	Overload relay	415V, 0-15A	2 no
15	MCB	415V, 3 Pole 25A	1 no
16	Copper wire multistrand	2.5 Sq mm	10 m
17	Race ways	-	2 m
18	Wire clips	-	As required
19	Terminal connectors	16 Amps	As required
20	Wire ferrule	-	As required
21	Grommets	-	As required
22	Lug	-	As required
23	Cable binding straps and buttons	-	As required
24	Nylon cable ties	-	As required
25	Assorted size bolt and nut	-	As required
26	Steel rule	1’	As required

Procedure:

TASK 1: Draw the circuit diagram in the control panel

Step 1: Draw the layout diagram of the automatic star delta starter.

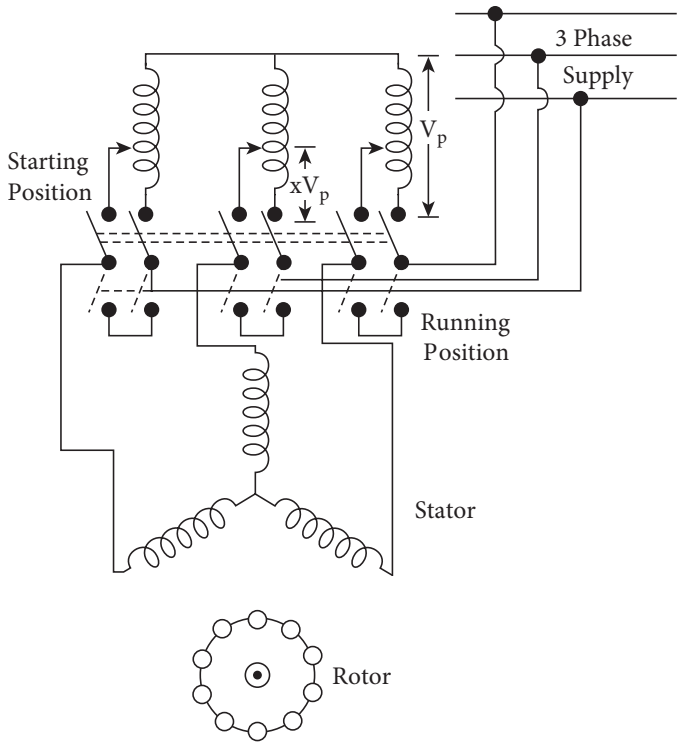

Step 2: Mark the layout inside the control panel by using steel rule.

Step 3: Mark the holes for control accessories, etc., as specified in the layout diagram.



Step 4: Mark and cut the DIN rail, 'G' channel and raceways as per layout. Mark the points in drills and fix it inside the control panel.

Step 5: Mark the drill holes in the front door of the control panel and fix the indicator lamp and push button switches.

Step 6: Mark the holes for the wire clips in the control panel door to run the wires.

Step 7: Make drills inside the control panel to fix control accessories, DIN rails, 'G' channel and raceways as per marking.

Step 8: Make the holes in raceways, DIN rails and the 'G' channel.

Step 9: Fix the control accessories in raceways, DIN rails and 'G' channel with screws, bolt and nuts.

Step 10: Make drills in the door of the panel for indicator lamp, push button and wire clips as per marking.



Task 2: Connect the control and power circuit with an automatic star delta starter

Step 1: Draw the control circuit and power circuit diagram.

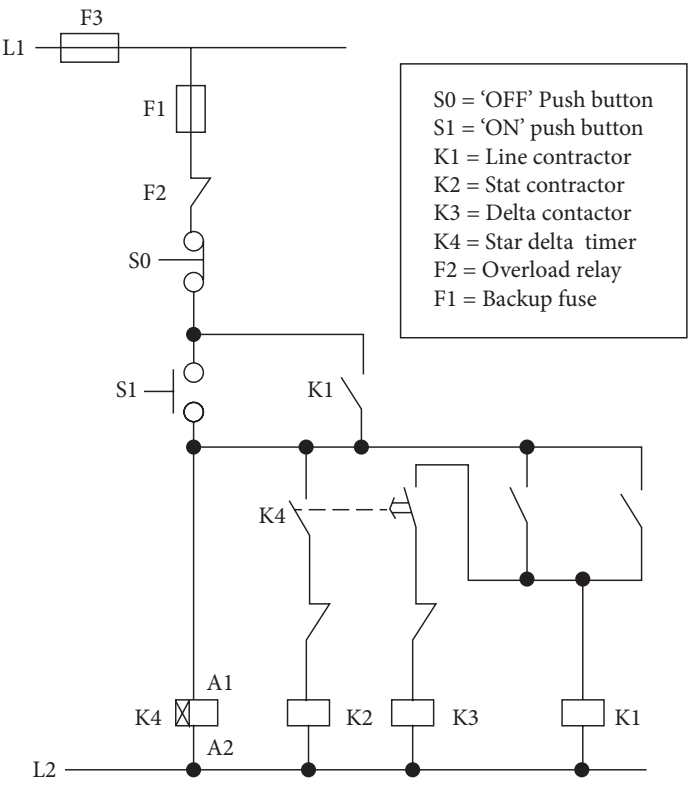

Control circuit

Control circuit

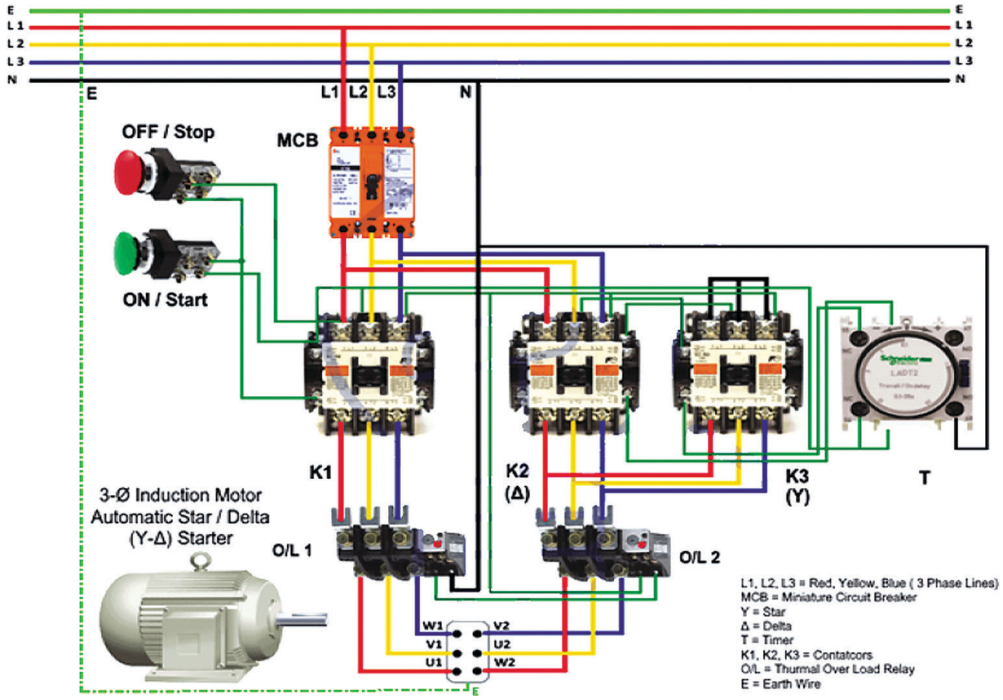

Power circuit

Step 2: Label the terminal number in the control and power circuit.

Step 3: Measure and cut the cable as per the layout.

Step 4: Run the wires in the raceway one by one. Prevent cross-over of wires.

Step 5: Skin the wire ends and crimp with suitable lugs/thimbles and label using ferrules.

Step 6: Connect the power and control circuit wires as per the diagram.

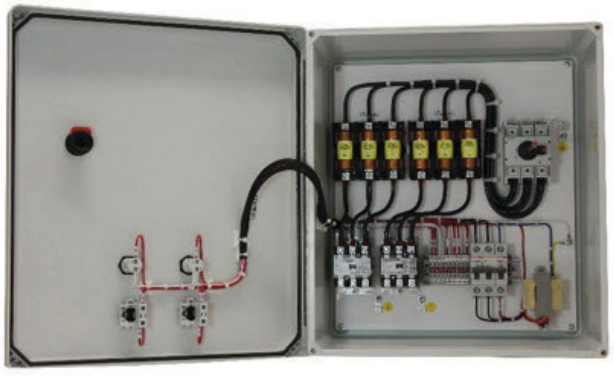

Step 7: Route the wires in the raceways. Punch and ties the wires in the raceways using cable binding straps and button.

Step 8: Earth the panel, door and control devices.

Step 9: Set the OLR in accordance with the full load current of the motor.

Step 10: Set the time in timer relay to shift the motor from star to delta connection.

Step 11: Connect the panel with motor and test it with the auto star delta starter.

Step 12: Ensure the motor starts with star connection and moves to a delta connection after the time set in the timer relay.

Result:

Thus, the three-phase induction motor is connected with the automatic star delta starter in the control panel and verified. Now it is working.

PRACTICAL

12

Draw and test the ladder diagram for staircase wiring in Programmable Logic Controller (PLC)

AIM

To draw and test the ladder diagram of staircase wiring in Programmable Logic Controller (PLC).

PRACTICAL PROCEDURE:

Identify the components in the panel

↓

Note down the reading in the table

TOOLS AND MATERIALS REQUIRED:

S.No	Tools and materials required	Range / Value	Quantity
1	Desktop / Laptop	Latest version	1
2	PLC software (latest)	Licensed version	1

Procedure:

Step 1: Install the PLC software in the computer.

Step 2: Draw the ladder logic diagram as given below.

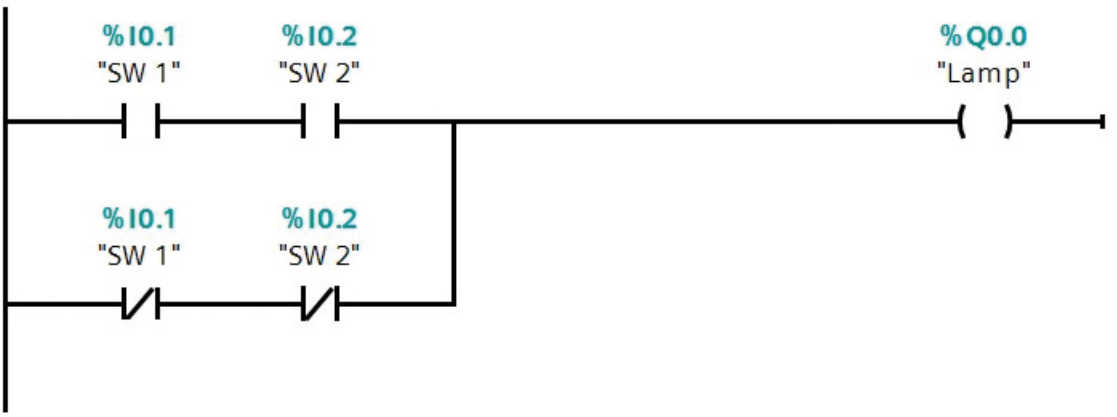

List of inputs / outputs:

Digital Inputs

- SW1: I0.1
- SW2: I0.2

Digital Outputs

- Lamp: Q 0.0

Step 3: Run the program and verify with the given table.

TW SW1	TW SW2	OUTPUT	LAMP
0	0	0	OFF
0	1	1	ON
1	0	1	ON
1	1	0	OFF

Result:

The ladder diagram of PLC staircase wiring was drawn, tested and verified.

PRACTICAL

13

Draw and test the ladder diagram for Automatic ON and OFF by using timers in PLC

AIM

To draw and test the ladder diagram for Automatic ON and OFF of lamps by using timers in PLC

PRACTICAL PROCEDURE:

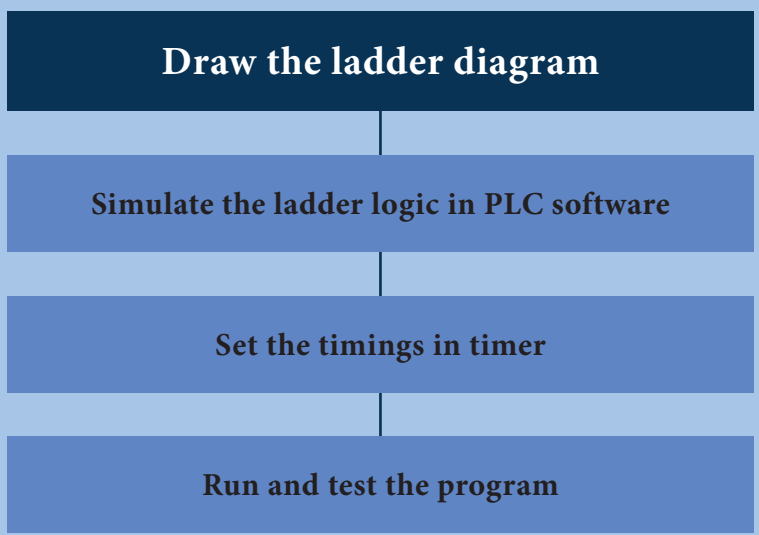

TOOLS AND MATERIALS REQUIRED:

S.No	Tools and materials	Range / Value	Quantity
1	Desktop / Laptop	Latest version	1
2	PLC software (latest)	Licensed version	1

Procedure:

Step 1: Simulate the ladder diagram PLC software in the computer.

Step 2: Draw the ladder logic diagram as given below.

Step 3: Run and check whether the lamp is ON and OFF as set in the timer.

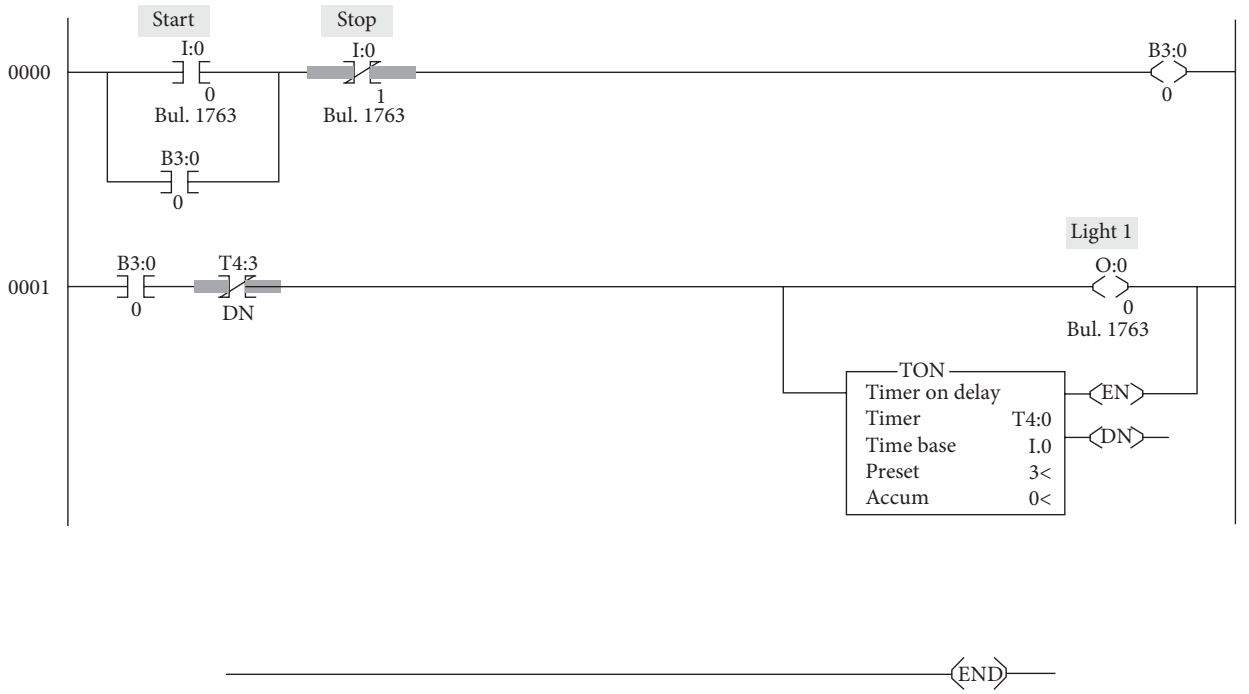

Result:

Thus, the ladder diagram is drawn for controlling lig the lamps by using PLC software and timer.

PRACTICAL

14

Prepare pipe earthing and measure its resistance by using Megger

AIM

To prepare pipe earthing and measure its earth resistance by using megger.

PRACTICAL PROCEDURE:

Preparing pipe earthing

Measuring the earth resistance

TOOLS AND MATERIALS REQUIRED:

S.No	Tools / Machineries / Materials	Range	Quantity
1	GI die stock	12.7 mm, 19 mm and 38 mm dies	1 Set
2	DE spanners	5 mm to 20 mm of six	1 Set
3	Blow lamp	1 litre with kerosene	1 No
4	Crowbar hexagonal	800 mm long	1 No
5	Spade	-	1 No
6	Pick axe	-	1 No
7	Cement mortar tray	-	2 Nos
8	Tongs	300 mm	1 No
9	Measuring tape	5 m	1 No
10	Ladle	-	2 Nos
11	Combination plier	200 mm	1 No

12	Pipe wrench	50 mm	1 No
13	Hacksaw	32 TPI blade	1 No
14	Wooden box	150(l) x 150(b) x 300(h) mm	1 No
15	Soldering iron with stand	25 watt	1 No
16	Sledge hammer	2 Kg	1 No
17	Megger	-	1 No
18	GI pipe	12.7 mm	5 m
19	GI bend	12.7mm	2 Nos
20	CI cover hinged to CI frame	300 mm square	1 No
21	GI pipe	19 mm	1 m
22	GI pipe	38 mm having 12mm hole	2.5 m
23	Reducer	38 x 19 mm	1 No
24	Funnel with sleeve & wire mesh	19 mm	1 No
25	GI nut for sleeve & wire mesh	19 mm	1 No
26	GI check-nuts for GI pipe	19 mm	4 Nos
27	GI washer	40mm with 19mm hole	1 No
28	GI wire	8 SWG	10 m
29	Copper lug	200 amps with 19 mm dia hole	1 No
30	Soldering lead	60/40	100 gm
31	Match box	-	1 No
32	Soldering paste	-	10 gms
33	Cement	-	10 kg
34	Blue metal chips	6 mm size	40 kg
35	River sand	-	80 kg
36	Salt (common)	-	3 bags
37	Coke or charcoal		3 bags

Procedure:

Task 1: Preparing pipe earthing

Step 1: Collect GI pipes and accessories.

Step 2: Make a slant or inclined cut of 30 degrees in the 38 mm GI pipe and make it sharp.

Step 3: Make threads in the other end of 38 mm GI pipe to a length of 25 mm.

Step 4: Make threads in both ends of 19 mm GI pipe to a length of 25 mm on one side and 75mm on the other side.

Step 5: Fabricate the 38mm and 19 mm GI pipes.

Step 6: Select an earth pit site to a distance of 1.5 metre away from the building basement foundation.

Step 7: Dig an earth pit of dimensions 1 m width x 1 m breadth x 3.75 m depth.

Step 8: Place the fabricated pipe in an upright position as shown below and make correct position with the help of bamboo sticks.

Step 9: Place the wooden box around the pipe and fill it to a height of 15cm with charcoal, and fill the surrounding outer space of the box with soil.

Step 10: Place the wooden box above the charcoal layer and fill it up with salt to a height of 15 cm to 150 x 150 mm area around the pipe.

Step 11: Repeat the above steps 10 and 11 up to 2.5 metres.

Step 12: Place the GI pipe 12.7 mm meter with GI bends in the proper position for ECC connection.

Step 13: Prepare the concrete mixture and build the structure.

Step 14: Fix the GI cover.

Step 15: Insert the GI 8 SWG wire through the 12.7mm GI pipe.

Step 16: Use the ladle and the blow lamp to melt the solder.

Step 17: Insert the lug in the 19mm GI pipe and tight it with the GI nut.

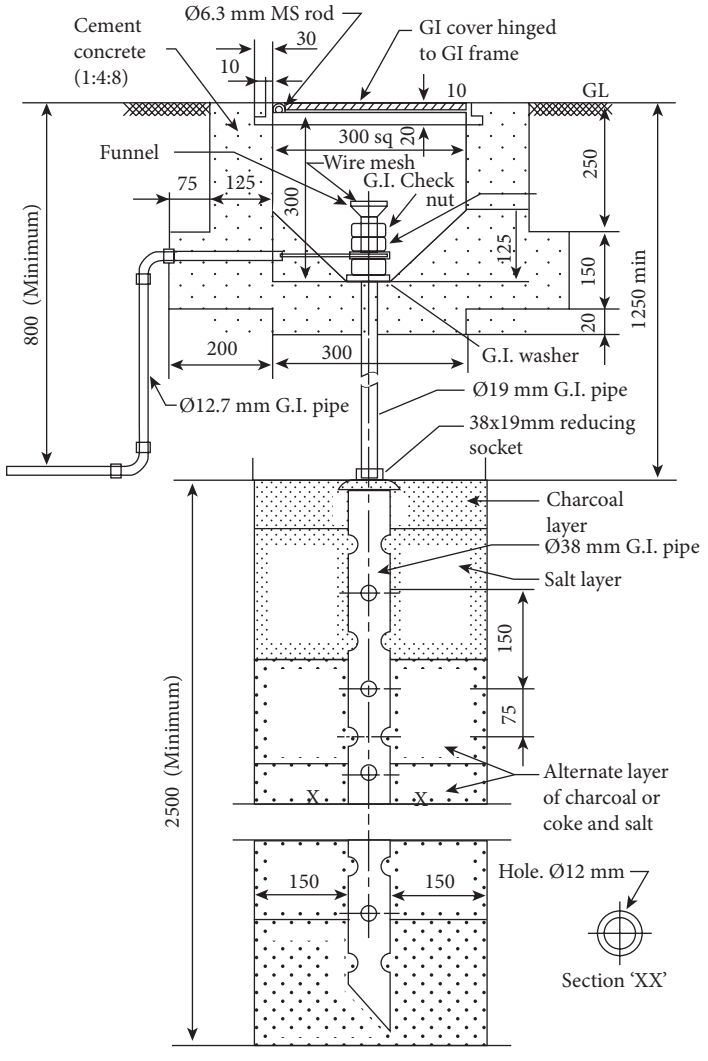

Note: Dimensions are in m unless otherwise specified

Pipe earthing

Step 18: Pour three or four buckets of water in it.

Step 19: Test the earth electrode resistance with an Megger.

Task 2: Measuring the value of earth resistance by using an Megger

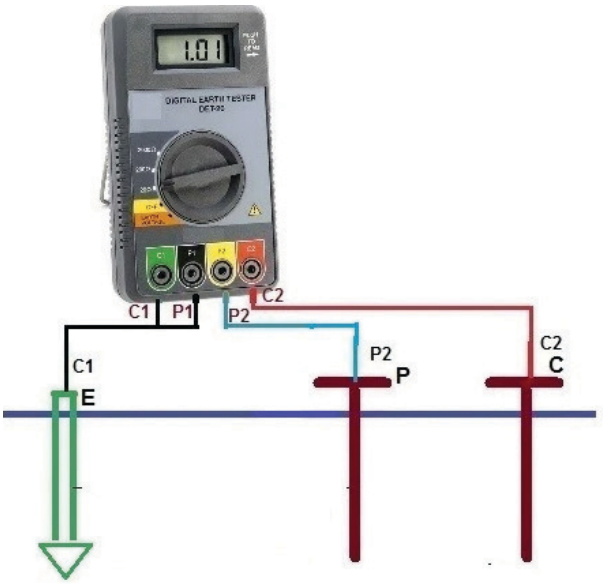

Step 1: First, isolate the grounding electrode by disconnecting it from the other for measurement.

Step 2: Connections are made as per the diagram.

Step 3: In this method, four small-sized electrodes are driven into the soil at the same depth at equal distance from one another in a straight line.

Step 4: Press START and read out the resistance value. This is the actual value of the ground resistance of the electrode.

Step 5: Check the value of the earth's resistance. If it is found higher than the acceptable value, make one more pipe earth electrode at a distance of 8 metres from the previous one and connect both of them in parallel.

Result:

Thus, the pipe earthing was done and the value of earth resistance was measured by using an Megger.

PRACTICAL

15

Practice Soldering and De-soldering techniques with different electronic component

AIM

To practice the Soldering and De-soldering techniques with the different electronic components in the given printed circuit boards (PCBs).

PRACTICAL PROCEDURE:

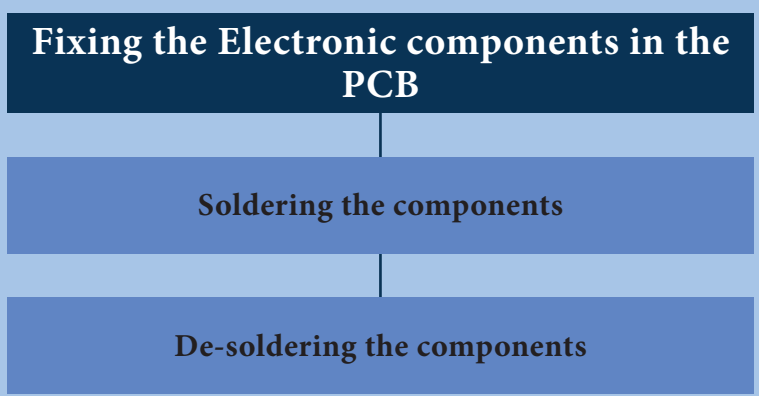

TOOLS AND MATERIALS REQUIRED:

S.No	Tools and materials	Range / Value	Quantity
1	Soldering Iron with stand	25 Watt, 230 V	1 No
2	Soldering lead	0.7mm thickness	100 grams
3	Soldering paste	-	20 Grams
3	Soldering wick	-	1 No
4	De-soldering pump	-	1 No
5	General purpose board	-	1 No

6	Diode	IN4001	4 No
7	Resistor	100 ohm	1 No
8	Capacitor	470 Microfarad,16v	1 No

Procedure:

Task 1: Soldering process

Step 1: Collect all the required components for soldering

Step 2: Insert the component leads through the holes present in the given PCB.

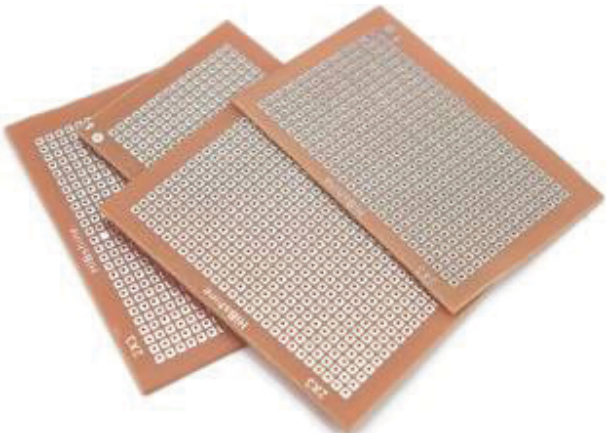

Step 3: The components should be positioned with the leads running through the holes on the board's opposite side from the soldering pads.

Step 4: Switch on the soldering iron and wait for a few minutes to warm up.

Step 5: Hold the soldering iron (like a pen) touch the component's lead and the solder pad with the tip.

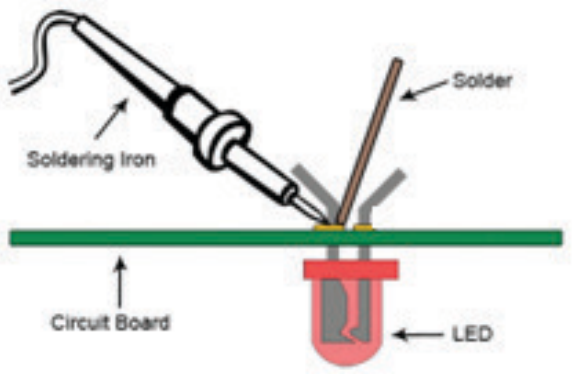

Step 6: To enable the solder to flow uniformly and make a perfect electrical connection, the lead and component both are heated simultaneously. Hold for one to two second to make the soldering iron point to hold the component.

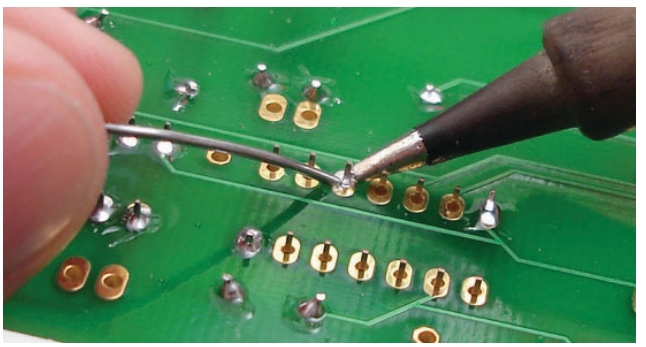

Step 7: Touch the junction between the component lead and the circuit board with the solder by keeping the soldering iron pad in that point.

Step 8: When the pad is evenly covered, remove the solder and the soldering iron.

Step 9: Repeat the procedure until all the components are soldered in the board.

Step 10: Cut and remove the excess leads of the component.

Step 11: Connect the power supply to the circuit and ensure the LED glows when connected to the output of the circuit.

Task 2: De-soldering process

Step 1: Use a soldering iron to heat the solder until it melts.

Step 2: Press the plunger of the de-soldering pump and place it on the molten solder.

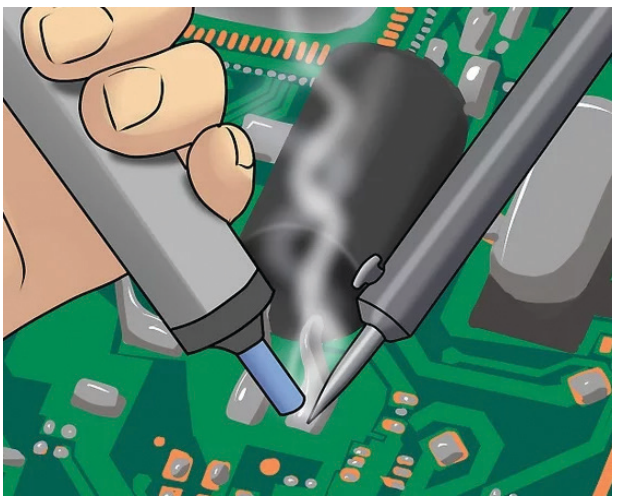

Step 3: Release the button.

Step 4: Remove the de-soldered components.

Step 5: Repeat the same steps until you remove the excess solder.

Result:

Thus, the soldering and de-soldering process were done with the help of the given components.

Higher Secondary – Second Year
Basic Electrical Engineering-Theory & Practical
List of Authors and Reviewers

Academic Advisor & Expert

Dr. PON KUMAR
Joint Director (Syllabus)
SCERT,Chennai

Domain Expert

Dr. R AZHAGUMURUGAN
Professor & Head of Department
Department of Electrical and Electronics Engineering,
Sri Sairam Engineering College,
West Tambaram, Chennai

Reviewer

Dr. M. VENKATESHKUMAR
Associate Professor,
Department of Electrical and Electronics Engineering,
Arupadai Veedu Institute of Technology,
Payanoor, Chennai

J. HARINARAYANAN
Associate Professor,
Department of Electrical and Electronics Engineering,
Sri Sairam Engineering College,
West Tambaram, Chennai

Dr. K. SURESH
Associate Professor,
Department of Electrical and Electronics Engineering,
Sri Sairam Engineering College,
West Tambaram, Chennai

AUTHORS

Dr. N. Gnanasekaran,
Professor & Head,
Department of Electrical and Electronics Engineering,
Misrimal Navajee Munoth Jain Engineering College,
Thoraipakkam, Chennai

K. Raja (State Awardee – 2018)
Vocational Teacher,
Government (B) Higher Secondary School,
Katpadi, Vellore.

S. Vallinayagam
Vocational Teacher,
Government Higher Secondary School,
Nadupatti, Salem.

P. Thirunavukkarasu (State Awardee – 2021)
Vocational Teacher,
Government Higher Secondary School,
Thiruneipair, Thiruvarur.

P. Manogar,
Vocational Teacher,
Government Higher Secondary School,
Kunnagampoondi, Tiruvannamalai.

N. Ravi (State Awardee – 2020)
Vocational Teacher,
National Higher Secondary School,
Nagapattinam

N. Karigalan
Lecturer, EEE Department,
Sri Sairam Polytechnic College,
West Tambaram, Chennai.

V. Yogan
Vocational Teacher,
KVS Higher Secondary School
Virudhunagar

N. Govindarajan
Vocational Teacher,
Government Higher Secondary School,
Vembakkam, Tiruvannamalai.

Academic Coordinators

Dr. A. Ilangovan (State Awardee – 2018)
Assistant Professor,
State Council of Educational Research and Training,
Chennai.

P. Malarvizhi
BT Assistant,
State Council of Educational Research and Training,
Chennai.

Ganesh Babu
Vocational Instructor,
Anjukam Higher Secondary School
West Mambalam Chennai.

Layout

Arockiam Felix

Data Operator

In House- QC

Wrapper Design

QR Code Management Team

Coordination

Ramesh Munisamy

This book has been printed on 80 G.S.M. Elegant Maplitho paper.
Printed by offset at: