GOVERNMENT OF TAMIL NADU

HIGHER SECONDARY SECOND YEAR

VOCATIONAL EDUCATION

Basic Mechanical Engineering

THEORY & PRACTICAL

A publication under Free Textbook Programme of Government of Tamil Nadu

Department of School Education

Untouchability is Inhuman and a Crime

1_XII BME_English version FM.indd 1 06-01-2023 15:40:46

Government of Tamil Nadu

First Edition - 2019,

Revised Edition - 2022, 2023

Reprint - 2020, 2021, 2024

(Published under New Syllabus)

NOT FOR SALE

Content Creation

State Council of Educational
Research and Training

© SCERT 2019

Printing & Publishing

Tamil NaduTextbook and
Educational Services Corporation

www.textbooksonline.tn.nic.in

1_XII BME_English version FM.indd 2 24/12/2023 10:18:17

CONTENTS

S.No	CHAPTER TITLE	PAGE NO.	MONTH
01	Lathe	**1-28**	**June**
02	Drilling Machine	**29-48**	**July**
03	Shaping Machine	**49-66**	**July**
04	Grinding Machine	**67-82**	**August**
05	Milling Machine	**83-94**	**September**
06	Machine Tool Maintenance	**95-102**	**October**
07	Welding	**103-114**	**October**
08	CNC Machine	**115-124**	**November**
09	Automation and Robotics	**125-136**	**November**
10	Industrial Management	**137-147**	**December**
	Model Question Paper	**148-150**	
	Practicals	**151-190**	

RXQ3O

E-book

8TBRV

Assessment

1_XII BME_English version FM.indd 3 06-01-2023 15:40:46

1_XII BME_English version FM.indd 4 06-01-2023 15:40:46



CHAPTER 01

LATHE

Learning Objectives

- Students to learn about the construction of Lathe and its parts, structure and its operation.
- To understand the feed mechanism of tumbler gear in Lathe.
- To know about the types of lathe and its details, difference between capstan and turret Lathe and work holding devices in Lathe.
- To understand the cutting speed, feed and depth of cut in Lathe, various types of operation and taper turning methods and thread cutting operation.

CONTENTS

1.1 Introduction
1.2 Process Of Machining
1.3 Structure of Lathe
1.4 Feed Mechanism
1.5 Spindle Mechanism
1.6 Types of Lathe
1.7 Specification of Lathe
1.8 Work Holding Devices
1.9 Cutting speed, Feed and Depth of cut in Lathe
1.10 Tools used in lathe
1.11 Operations Performed in Lathe
1.12 Coolant

1.1 Introduction

The lathe is a machine tool which is useful for performing various operations such as turning, taper turning, thread cutting, chamfering and knurling with single point cutting tool. It is considered as one of the oldest machine tools and is widely used in industries. It is called as mother of machine tools. The first screw cutting lathe was designed by an Englishman named Henry Maudslay in the year 1797. He is the father of Machine Tool. Modern lathes are developed based on this machine.

XII BME_English version CHAPTER 01.indd 1 04-02-2023 17:56:50

1.2 Process Of Machining

Machining on cylindrical workpieces is the primary task of a lathe. The process of machining a workpiece to the required shape and size by moving the cutting tool either parallel or perpendicular to the axis of rotation of the workpiece is known as turning. In this process, unwanted metal is removed.

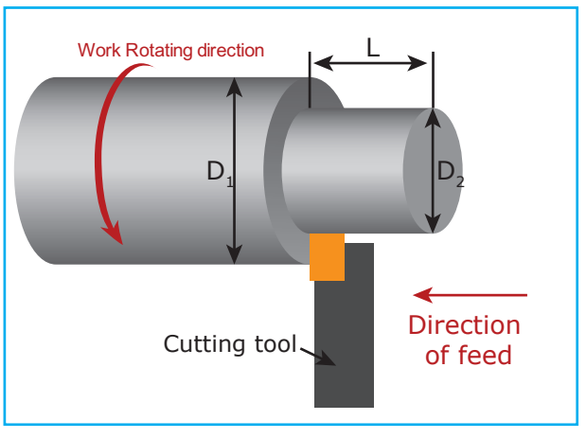

Turning

1.3 Structure of Lathe

The Lathe has bed on which head stock is mounted on the left end, tailstock at right end and carriage is placed in between them and moved on the bed.

1.3.1 Main Parts of the Lathe

Every individual part performs an important task in a lathe. Some important parts of a lathe are listed below

1. Bed
2. Headstock
3. Spindle
4. Tailstock
5. Carriage
   a. Saddle
   b. Cross – slide
   c. Compound rest
   d. Compound slide
   e. Tool post
   f. Apron
6. Leadscrew
7. Feed rod

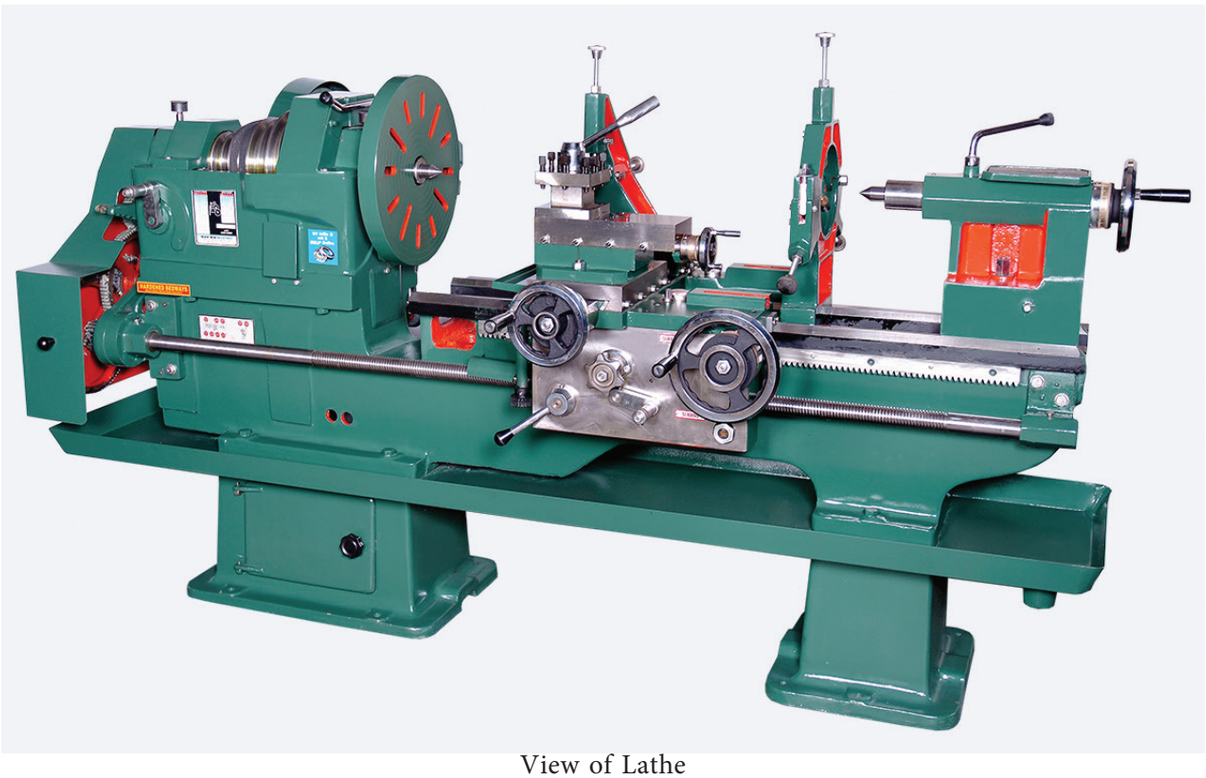

View of Lathe

XII BME_English version CHAPTER 01.indd 2 04-02-2023 17:56:51

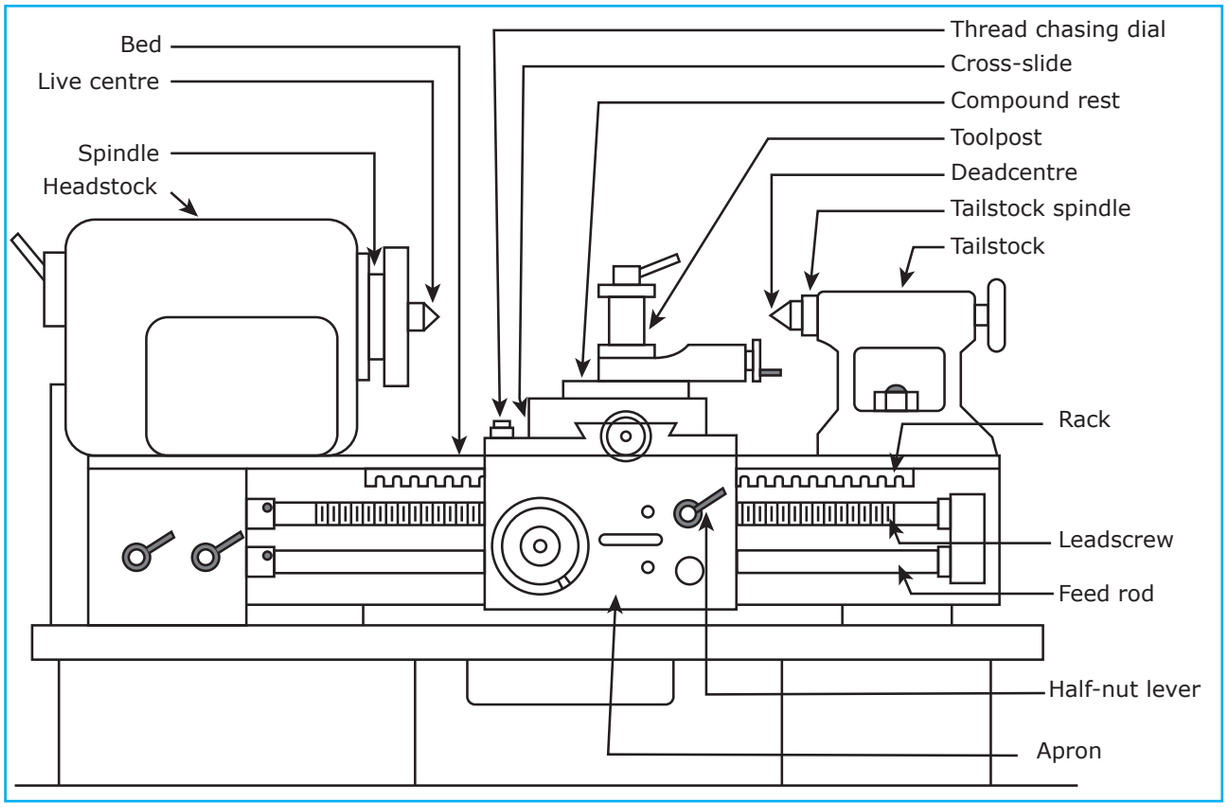

Lathe

Bed

Bed is mounted on the legs of the lathe which are bolted to the floor. It is made of cast iron and its top surface is machined accurately and precisely. Headstock of the lathe is located at the extreme left of the bed and the tailstock at the right extreme. Carriage is placed in between the headstock and tailstock and moves on the bed guideways.

The top of the bed has a guideways which is manufactured in two shapes

1. Flat shaped
2. V – Shape

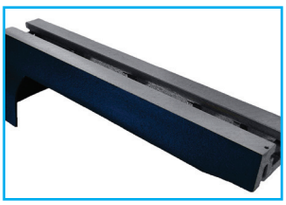

Flat shaped

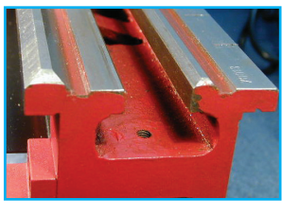

V – Shaped

The tailstock and the carriage slides on these guideways. Flat bed guide ways can be found in older machine tools. It is useful in heavy duty machines, handling large workpieces though, it is less accuracy. V-type bed has been found in modern machine tools. This type of V-bed gives accurate alignment to carriage and tailstock. The metal chips automatically fall through.



The inventor of Lathe is Henry Maudslay, in the year 1797. He is also called as father of Machine Tools.



XII BME_English version CHAPTER 01.indd 3 04-02-2023 17:56:51

Headstock

Headstock is mounted permanently on the left hand side of the lathe bed. The headstock has a hollow spindle which is mounted by using bearing and it will have any one of the following arrangements for changing the speed of rotation of the spindle.

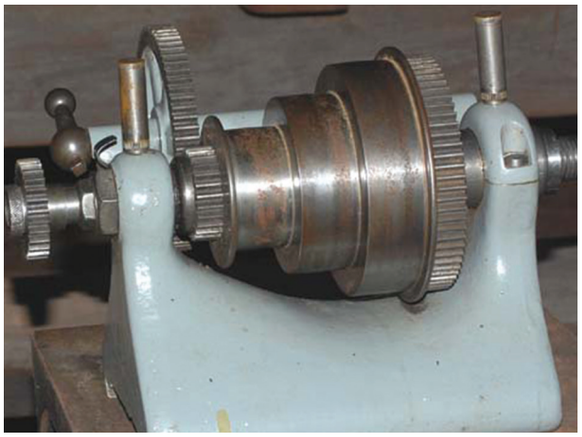

Headstock

1. Stepped cone pulley mechanism
2. Back gear mechanism
3. Gear box mechanism

Spindle

The spindle is mounted on the headstock by using bearing. The bearings support to rotate the spindle. It is made of carbon or nickel chrome steel. It has a through hole, so it called as hollow spindle in which a lengthy work piece can be inserted. The front end of the spindle is threaded on which any one of the work holding devices can be screwed. The front end of the hole is tapered to hold live centre which supports the work. On the other side of the spindle, a gear is fitted which is known as spindle gear. Through this gear, tumbler gears and a main gear train, the power is transmitted to the gear on the lead screw.

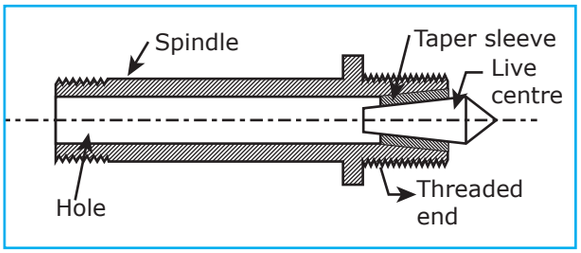

Spindle

Tailstock

Tailstock is located on the right side of the lathe bed. The body of the tailstock is bored and a spindle moves front and back inside the hole. The spindle has a tapper hole to hold the dead centre or shanks of tool like drill or reamer. If the tailstock hand wheel is rotated in clockwise direction, the spindle advances. The spindle will be reversed inside the hole, if the hand wheel is rotated in anti-clockwise direction.

To remove the dead centre or any other tool from the spindle, the handwheel is rotated in anticlockwise direction further. The movement of the spindle may be locked by spindle clamp, located on top of the tailstock. To hold different lengths of work, the tailstock can be adjusted and locked at desired position on the lathe bed. The casting of the tailstock body is divided into two. The lower casting of the body can be clamped to the bed. The upper casting can be moved sidewards from lathe axis.

1. It supports the right end of the long workpiece when it is machined between centres
2. It is useful in holding tools like drills, reamers and taps when performing drilling, reaming and tapping.
3. The upper casting of the body is set off by a small distance from the axis of the lathe to turn tapers on the work pieces.

XII BME_English version CHAPTER 01.indd 4 04-02-2023 17:56:51

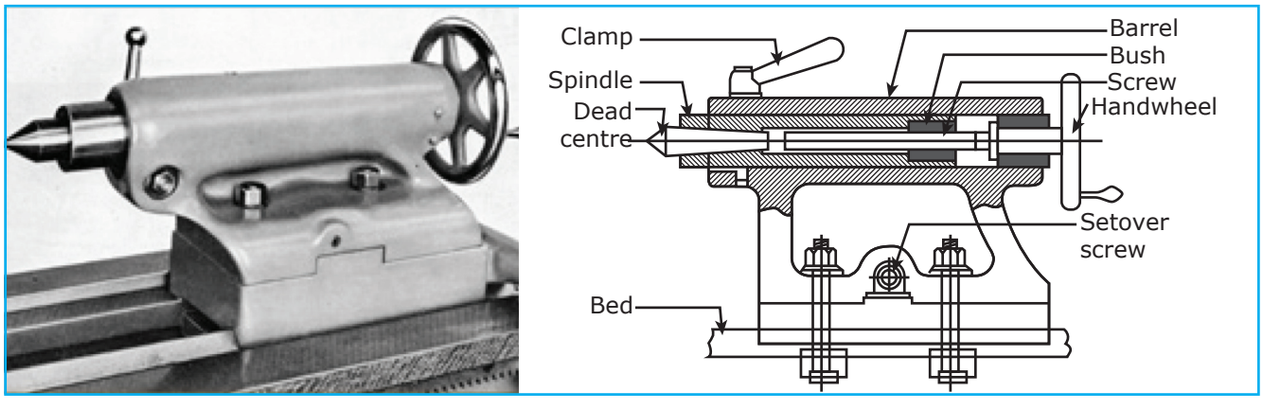

Tailstock

4. It is useful in setting the cutting tool at correct height aligning the cutting edge with lathe axis.

Carriage

Carriage is located between the headstock and tailstock on the lathe bed guideways. It can be moved along the bed either towards or away from the headstock. It has several parts as follows

The parts of the carriage are

a. Saddle
b. Cross slide
c. Compound rest
d. Compound slide
e. Tool post
f. Apron

Saddle

Saddle connects the front and back portion of bed guideways like a bridge. It is an 'H' shaped casting. It moves along the bed between headstock and tailstock. The saddle can be moved by providing hand feed or automatic feed.

Cross slide

Cross slide is situated on the saddle and slides on the dovetail guideways at right angles to the bed guideways. It carries compound rest, compound slide and tool

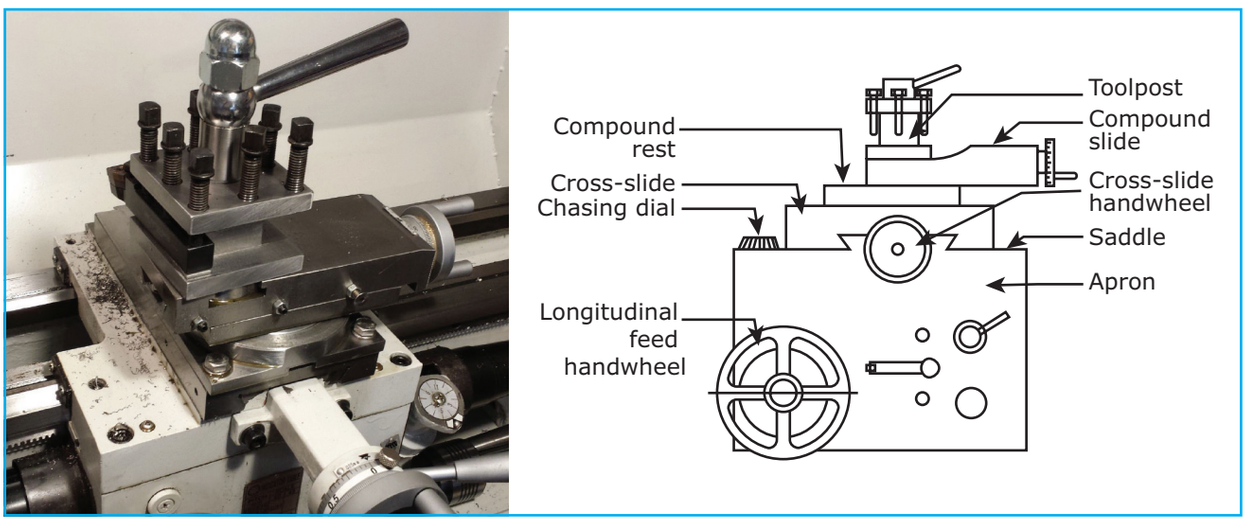

3D- View of Carriage

Carriage

XII BME_English version CHAPTER 01.indd 5 04-02-2023 17:56:51

post. The handwheel that drives the cross slide has a graduation scale so that the cross slide can be fed to fed to a precision of 0.05mm.

Compound rest

Compound rest is a part which connects cross slide and compound slide. It is mounted on the top of the cross slide by tongue and groove joint. It has a circular base on which angular graduations are marked. The compound rest can be swiveled to the required angle while turning tapers. A top slide known as compound slide is attached to the compound rest by dove tail joint. The tool post is fixed on the compound slide.

Tool post

The tool post is mounted on the compound slide. It is used for holding the cutting tool tightly. According to the operations on the work piece, tool may be changed and fixed on the tool post. There are several types of tool post among which single screw tool post and four way tool post are widely used.

Single screw tool post

Tool can be held by the single screw tool post. The tool is clamped by one clamping screw. A concave ring is found in the tool post. A convex rocker iron piece has got a convex surface at its bottom and flat surface at its top. This rocker iron piece is placed on the concave ring. The tool rests on the top flat surface of the rocker.

The height of the tool point can be adjusted by moving the rocker front and back. As the tool is clamped by only one clamping screw, it is not preferable for heavy duty works.

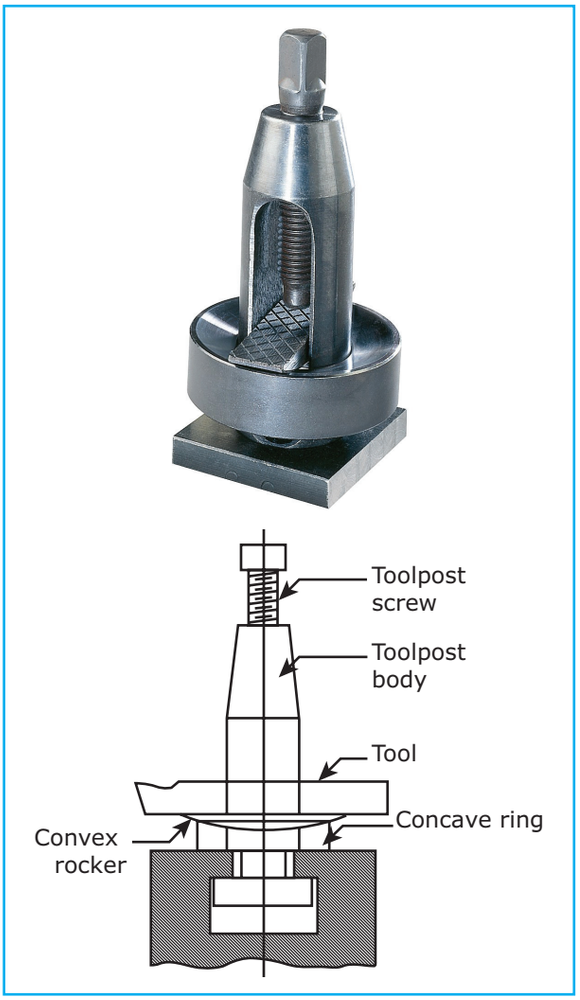

Single screw tool post

Four way tool post

Four way tool post is known as Turret tool post. Four different types of tool can be placed and clamped at a time. The required tool can be turned towards the workpiece for turning process. As the required tools fitted ready in position, the turning work is easier and faster. This type of tool post is used in heavy duty lathes.

Apron

Apron is attached to the carriage and hangs over the front side of the lathe bed. It is useful in providing power and hand feed to both carriage and cross-slide. It is also used to provide power feed to the carriage during thread cutting.

XII BME_English version CHAPTER 01.indd 6 04-02-2023 17:56:51

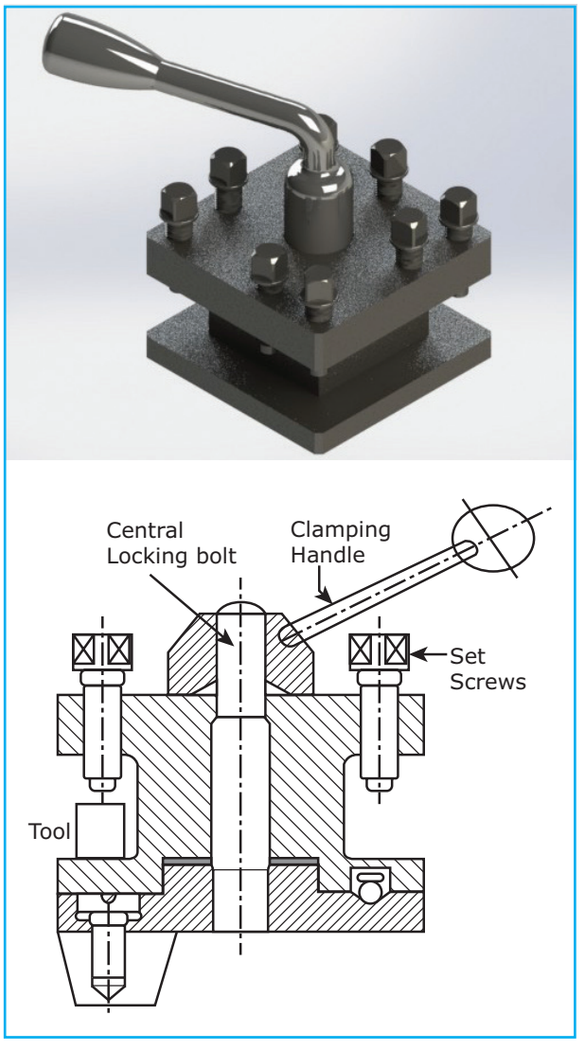

Four way tool post

1.4 Feed Mechanism

The movement of the tool relative to the work piece is termed as feed. Three types of feed can be given in a Lathe. They are longitudinal, cross and angular.

If the tool moves parallel along with the axis of the Lathe, the movement is called longitudinal feed. It is obtained by moving the carriage. This feed can be given by hand or automatic.

If the tool moves perpendicular to the axis of the Lathe, the movement is called cross feed. It is obtained by moving the cross slide. This feed can be given by hand or automatic.

If the tool moves at angle to the axis of the Lathe, the movement is called angular feed. It is obtained by swivelling the compound rest at an angle to the Lathe axis and moving it. It is available only by hand.

Feed Rod

Feed rod is placed parallel to the lead screw in front side of the bed. It is a plain long shaft which has a keyway along its length. The power is transmitted from the spindle to the feed rod through tumbler gears and a gear train. It is useful for providing feed movement to the carriage and cross slide, except thread cutting time.

Lead Screw

The lead screw is a long threaded shaft. It is used for moving the carriage automatically to a calculated distance only when threads have to be cut. Mostly lead screws have an Acme thread.

If the half nuts are engaged with the rotating lead screw the carriage will move automatically. When the lead screw is kept stationary the carriage is locked at the required position by using half nuts.

The rotation of leadscrew and feed rod direction can be changed by Tumbler Gear, so the direction of carriage and cross slide movements can also be changed.

1.4.1 Tumbler Gear

A set of two small gears are placed just below the spindle gear and connected to the spindle gear in the lathe. The set of gears is known as tumbler gear.

The set of two small tumbler gears are fitted in a bracket. The bracket position can be adjusted into three positions such as neutral, upwards and downwards. By

XII BME_English version CHAPTER 01.indd 7 04-02-2023 17:56:52

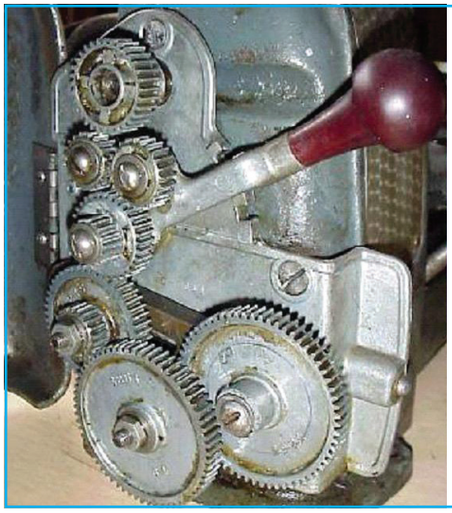

3D- Tumbler Gear

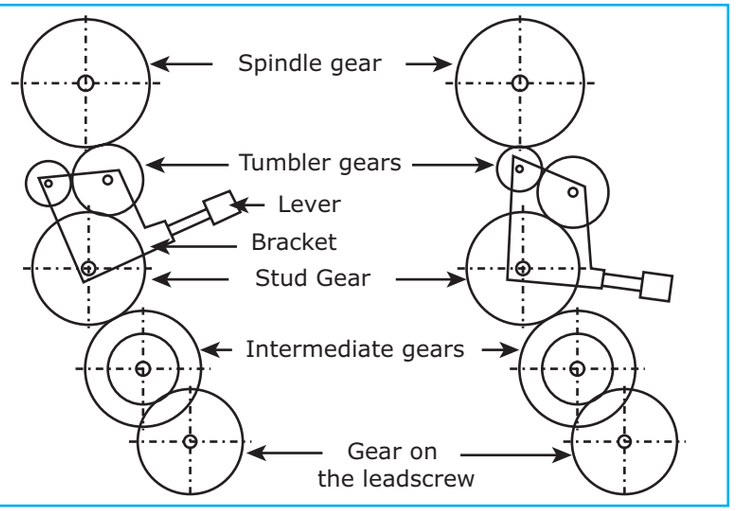

Tumbler Gear

adjusting the position of tumbler gear, the rotation of lead screw and feed rods direction can be changed.

Neutral

In this position, the tumbler gears lever is in the middle position hence, the tumbler gears are not engaged with spindle gear and the intermediate gears and so, automatic feed is not received.

Upward Position

In this position, the tumbler gears lever is shifted upward position. Here only one tumbler gear is in contact with the spindle gear, hence, the leadscrew rotates in the same direction of the spindle rotation. The carriage moves towards headstock.

Downward Position

In this position, the tumbler gears lever is pushed downward position. Here, lead screw receive rotational movement from spindle gear through two tumbler gears. Hence lead screw rotates in opposite direction of the spindle rotation. So the carriage will move towards tailstock.

1.5 Spindle Mechanism

The spindle is located in the headstock and it receives the driving power from the motor. The spindle speed should be changed to suit different machining conditions like type of material to be cut, the diameter and the length of the work, type of operation, the type of cutting tool material used, the type of finish desired and the capacity of the machine. In order to change the spindle speeds, any one of the following methods are employed.

1. Stepped cone pulley mechanism
2. Back gear mechanism
3. Gear box mechanism

1.5.1 Stepped Cone Pulley Mechanism

It is simple in construction. A stepped cone pulley is attached with the spindle contained within the headstock casting. The cone pulley has four steps (A, B, C D). Another cone pulley having four steps (E, F, G and H) is placed parallel to the spindle cone pulley. Both the cone pulleys are connected by a flat belt. The belt can be arranged between any one of the four

XII BME_English version CHAPTER 01.indd 8 04-02-2023 17:56:52

steps AH, BG, CF and DE. The cone pulley (EFGH) at the bottom is connected to the electric motor by a 'V' – belt. So the cone pulley at the bottom rotates at a particular speed.

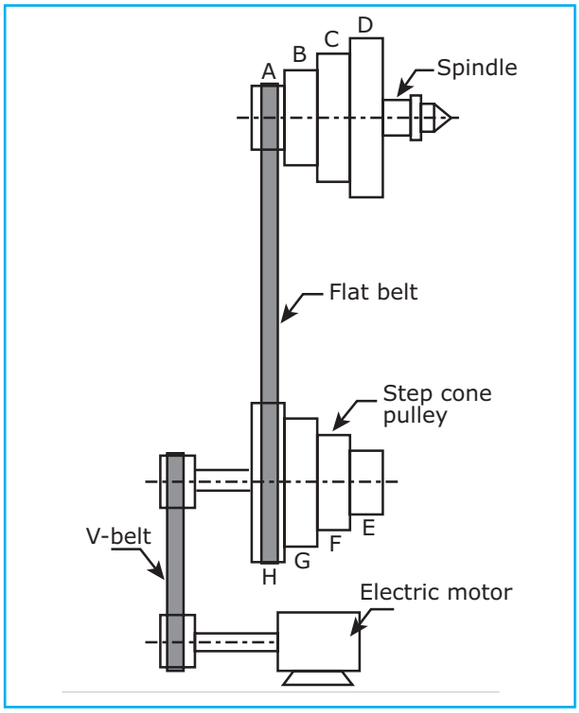

Stepped Cone Pulley Mechanism

If the belt is placed on the smaller step of the spindle cone pulley, the spindle speed will be increased. For example, when the belt is arranged between A & H the spindle speed will be high.

When it is between D & E, the speed will be low. Stepped cone pulley drive is illustrated in figure

Use:

Four different spindle speeds can be obtained in this mechanism.

1.5.2 Back Gear Mechanism

Back gear mechanism is housed within the headstock of the lathe. A step cone pulley having steps ABCD and a small pinion 'P' are mounted on the spindle and rotates freely on it. The gear 'S' is keyed to the head stock spindle. So the spindle will rotate only when the gear 's' rotates.

The step cone pulley ABCD and the gear 'S' can be kept separately or made as one unit with the help of a pin 'T' when the pin is disengaged, the cone pulley along with the gear P will rotates freely on the spindle and the spindle will not rotate. There is another shaft parallel

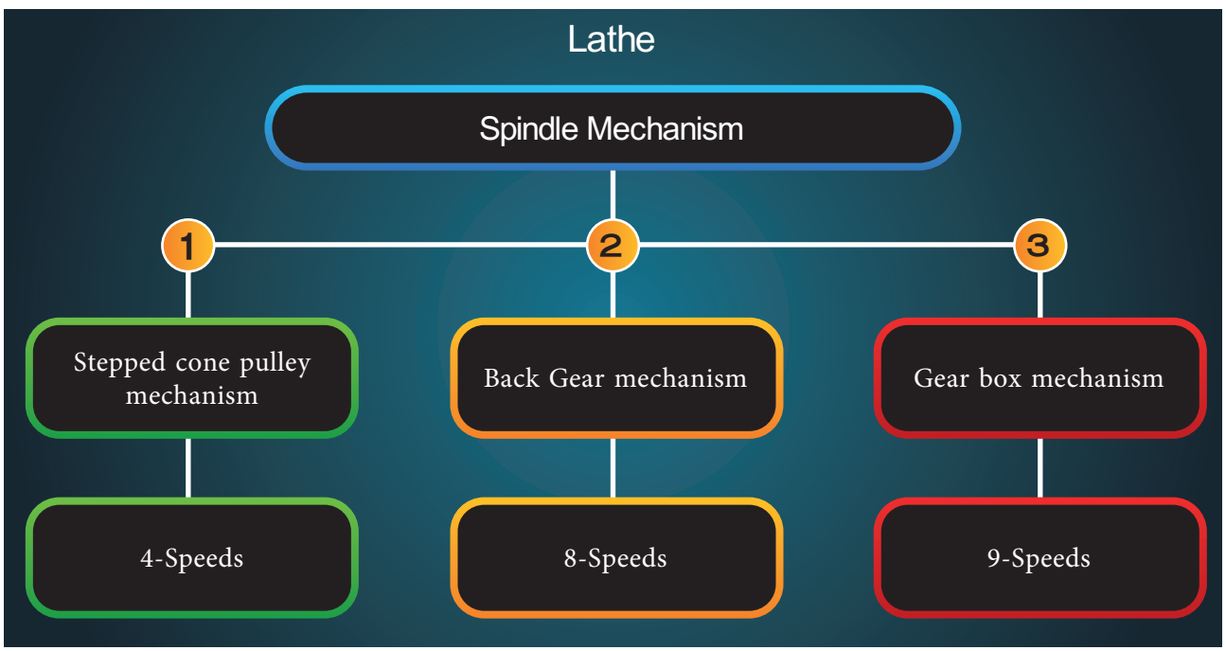

XII BME_English version CHAPTER 01.indd 9 04-02-2023 17:56:52

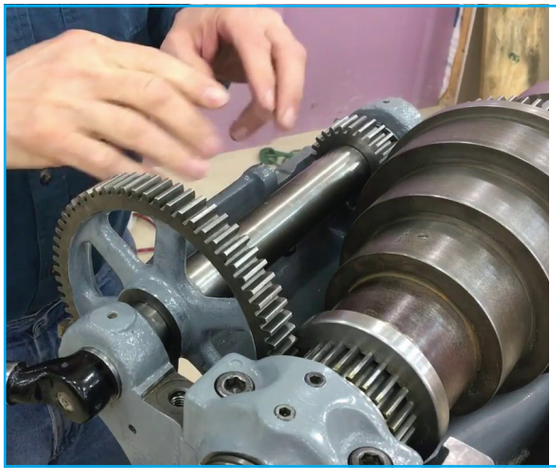

3D- Back gear mechanism

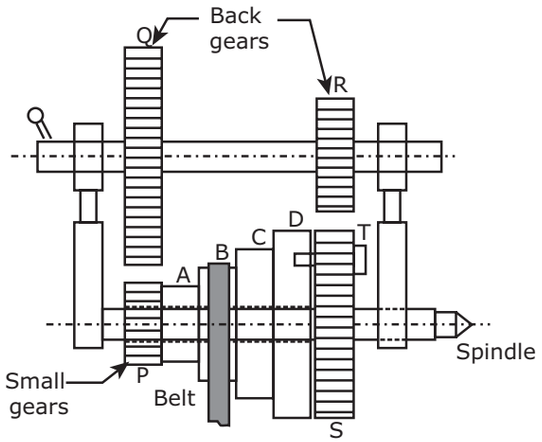

Back gear mechanism

to the spindle axis having back gear Q and R mounted on it. These back gears can be made to mesh with gears 'P' and 'S' or kept disengaged from them. The spindle can get drive either from the cone pulley or through back gears.

Drive from Step Cone Pulley

When the spindle gets from the cone pulley, the back gears Q and R are disengaged from the gears P and S. The pin 'T' is engaged with cone pulley. The belt can be arranged on the steps ABC or D to get four different direct speeds for the spindle.

Drive through Back Gears

Back gears Q and R are engaged with gears P and S. The pin 'T' is disengaged from the cone pulley to make the cone pulley and the spindle separate units. When the cone pulley gets drive through the belt, the power is transmitted through the gears P, Q and R to the gear S, because the diameter of the gear and number of teeth is greater on these gears, the spindle rotates at slower speeds.

Uses

1. It is used for reducing the spindle speed, when turning on lager diameter of the work pieces and cutting coarse threads.
2. Eight different types of spindle speed can be obtained by this mechanism.

1.5.3.Gear Box Mechanism

Modern lathes are equipped with all geared headstocks to obtain different spindle speeds quickly. Casting of the all geared headstock has three shafts (1, 2 & 3) mounted within it. The intermediate shaft (2) has got three gears D, E and F and rotates at the same place and cannot move. The shaft (1) which is above the intermediate shaft has got three set of gears A, B and C mounted on it by keys. These three set of gears can be made to slide on the shaft with the help of a lever. This movement enables the gear A to have contact with the gear D or the gear B with gear E or the gear C with the gear F.

Likewise the spindle shaft (3) which is also splined has three set of gears G, H and I. These three set of gears can be

XII BME_English version CHAPTER 01.indd 10 04-02-2023 17:56:52

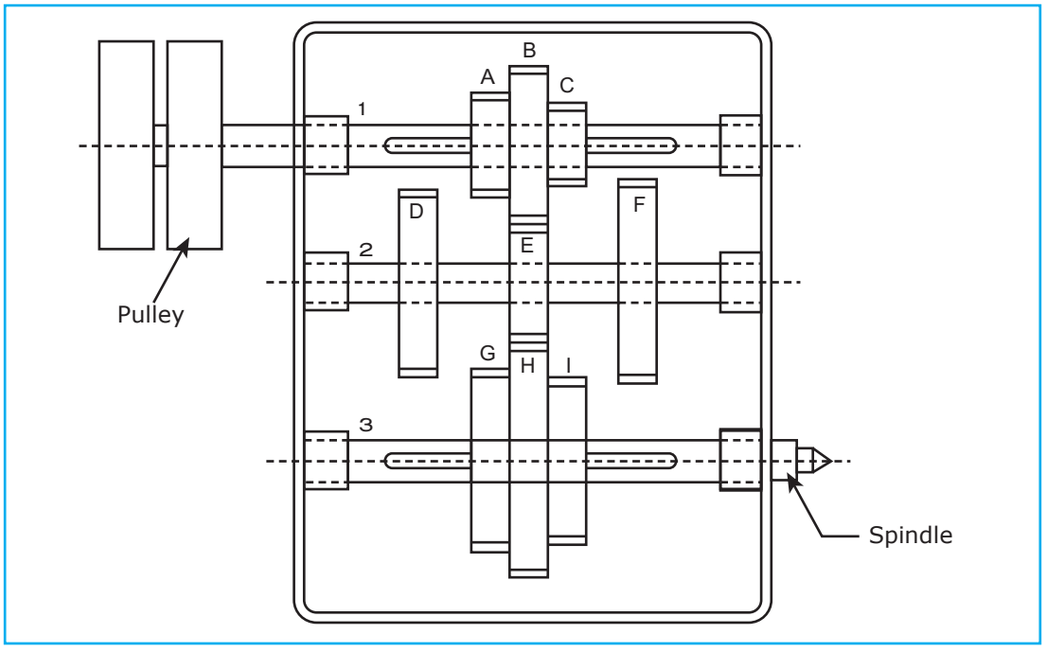

Gear Box

made to slide on the shaft by lever. This sliding movement enables the gear G to have contact with gear D or the gear H with the gear E or the gear I with the gear

By altering the position of the six gears namely A, B, C, G, H and I the following arrangements can be made within the headstock. It has nine different gears within the headstock. 9 different spindle speeds are obtained.

1. $\frac{A}{D}\times\frac{D}{G}$	2. $\frac{A}{D}\times\frac{E}{H}$	3. $\frac{A}{D}\times\frac{F}{I}$
4. $\frac{B}{E}\times\frac{D}{G}$	5. $\frac{B}{E}\times\frac{E}{H}$	6. $\frac{B}{E}\times\frac{F}{I}$
7. $\frac{C}{F}\times\frac{D}{G}$	8. $\frac{C}{F}\times\frac{E}{H}$	9. $\frac{C}{F}\times\frac{F}{I}$

1.6 Types of Lathe

Various designs and constructions of lathe have been developed to suit different machining conditions and usage. The following are the different types of lathe.

1. Engine lathe or Centre lathe
2. Speed lathe
   a. Centering lathe
   b. Wood working lathe
   c. Polishing lathe
   d. Metal spinning lathe
3. Bench lathe
4. Tool room lathe
5. Semi Automatic lathe
   a. Capstan lathe
   b. Turret lathe
6. Automatic lathe
7. Special purpose lathe

1.6.1 Engine lathe or Centre lathe

In earlier time lathes were driven by steam engines so, they were called as engine lathe. The modern engine lathe is driven by an electric motor. The Engine lathe is also known as “Centre lathe”. The engine lathe has all the basic parts such as bed, head stock carriage and tail stock.

XII BME_English version CHAPTER 01.indd 11 04-02-2023 17:56:52

1.6.2 Speed Lathe

Spindle of a speed lathe operates at very high speeds (approximately at a range of 1200 to 3200 rpm) and so it is named so. It consists of a headstock, a tailstock, a bed and toolpost only. Parts like leadscrew, feed rod and apron are not found in this type of lathe.

a) Centering lathes are used for drilling holes on the centre of the face of the cylindrical job

b) Lathes which used for making artistic work on wooden articles like chair, table and cot are called wood working lathe

c) Metal spinning lathes are useful in making vessels from sheet metal.

d) Polishing of vessels is carried out in polishing lathe.

1.6.3 Bench Lathe

Bench lathe is a small lathe generally mounted on a bench. The parts of a bench lathe are similar to that of an engine lathe. It is used for small works like machining tiny and precise parts and parts of measuring instruments.

1.6.4 Tool Room Lathe

A tool room lathe has similar features of an engine lathe. It is accurately built and has wide range of spindle speeds to perform precise operations and different feeds. It is costlier than a centre lathe. This is mainly used for precision works like manufacturing tools, dies, jigs, fixtures and gauges.

1.6.5 Semi Automatic Lathe

Turret and capstan lathes are known as semi-automatic lathes. These lathes are used for production work where large quantities of identical work pieces are manufactured. They are called semi-automatic lathes as some of the tasks are performed by the operators and the rest by the machines themselves.

There are two tool posts in the machine namely front tool post and rear tool post. Four tools can be mounted on the front post and parting tool is mounted on the rear tool post. In this lathe, the tailstock is replaced by a hexagonal turret head. As six tools may be fitted on the six side of the turret, different types of operations can be performed on a work piece without resetting of tools.

Advantages

a) Machining operations can be done in this machine by semi skilled operators.

b) Large quantity of product can be produced quickly

c) The cost of production is less

1.6.6 Automatic Lathes

Automatic lathes are operated with complete automatic control. They are high speed, mass production lathe. An operator can took after more than one automatic lathe at a time

1.6.7 Special Purpose Lathe

Special purpose lathes are used for special purposes and for jobs, which cannot be accommodated and conveniently machined on a standard lathe.

Wheel lathe 'T' lathe, duplicating lathe are some examples of special purpose lathe

XII BME_English version CHAPTER 01.indd 12 04-02-2023 17:56:52

Difference between turret lathe and a capstan lathe

S.No	Turret lathe	Capstan lathe
1.	Turret tool head is directly fitted on the saddle and both of them appear like one unit.	Turret head is mounted on a slide called ram which is mounted on the saddle.
2.	Saddle is moved to provide feed to the tool.	To provide feed to the tool, saddle is locked at a particular point and the ram is moved.
3.	It is difficult to move the saddle for feed.	It is easy to move the ram for feed.
4.	As the saddle can be moved along the entire length of the bed. It is suitable for longer workpieces.	As the movement of the ram is limited, it is suitable for machining shorter workpieces only.
5.	To index the turret tool head, a clamping lever is released and the turret is rotated manually.	When the handwheel for the ram is reversed, the turret tool head is indexed automatically.
6.	Limit dogs are used to control the distance of tool movement.	To control the distance of tool movement, feed stop screws are provided at the rear side of the turret.
7.	Suitable for machining heavy and large workpieces.	Only small and light workpieces are machined.
8.	Machining can be done by providing more depth of cut and feed.	Only limited amount of feed and depth of cut are provided for machining.

The tool heads of a turret lathe and a capstan lathe are illustrated in figure.

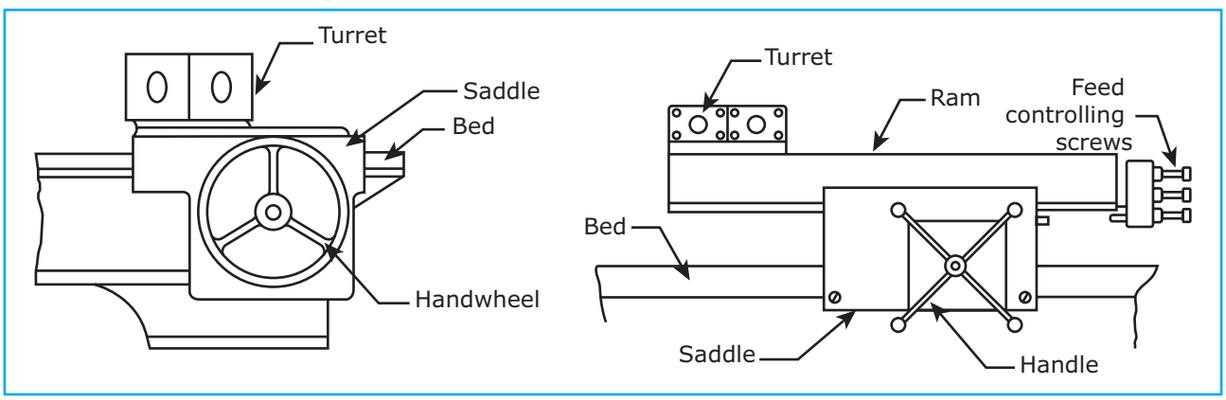

turret lathe

capstan lathe

1.7 Specification of Lathe

The size of a lathe is specified by the following points

1. The length of the bed.
2. Maximum distance between live and dead centres.
3. The height of centres from the bed.

XII BME_English version CHAPTER 01.indd 13 04-02-2023 17:56:52

4. The swing diameter
   a. The swing diameter over bed – It refers to the largest diameter of the work that will be rotated without touching the bed.
   b. The swing diameter over carriage – It refers to the largest diameter of the work that will revolve over the saddle.
5. The bore diameter of the spindle.
6. The width of the bed.
7. The type of the bed.
8. Pitch value of the lead screw.
9. Horse power of the motor.
10. Number and range of spindle speeds.
11. Number of feeds.
12. Spindle nose diameter.
13. Floor space required.
14. The type of the machine

1.8 Work Holding Devices

The work holding devices are used to hold and rotate the workpieces along with the spindle. Different work holding devices are used according to the shape, length, diameter and weight of the workpiece and the location of turning on the work.

They are,

1. Chucks
2. Face plate
3. Driving plate
4. Catch Plate
5. Carriers
6. Mandrels
7. Centres
8. Rests

Chucks

Work pieces of short length, cylindrical and irregular shapes are held quickly and rigidly in chuck. There are different types of chucks namely, three jaw universal chuck, four jaw independent chuck, Magnetic chuck, Collect chuck and Combination chuck.

Three Jaw Self Centring Chuck

It has three jaws. The three jaws will slide simultaneously to the center of the chuck while rotating by chuck key. This type of chuck is suitable for holding and rotating cylindrical work pieces or hexagonal rods about the axis of the lathe.

Advantages

The work is held simply and quickly because of the three jaws are moved to slide at the same time. So, time is saved. It is suitable for apprentice.

Disadvantage

- Workpieces of irregular shapes cannot be held by this chuck.

Four Jaw Independent Chuck

There are four jaws in this chuck. Each jaw is moved independently by rotating a screw with the help of a chuck key. A particular jaw may be moved according to the shape of the work. Hence this type of chuck can hold works of irregular shapes. Concentric circles are inscribed on the face of the chuck to enable quick centering of the work piece.

Disadvantages

1. It requires more time to set the work aligned with the lathe axis because each jaw is moved independently
2. Experienced turners can set the work about the axis quickly

XII BME_English version CHAPTER 01.indd 14 04-02-2023 17:56:53

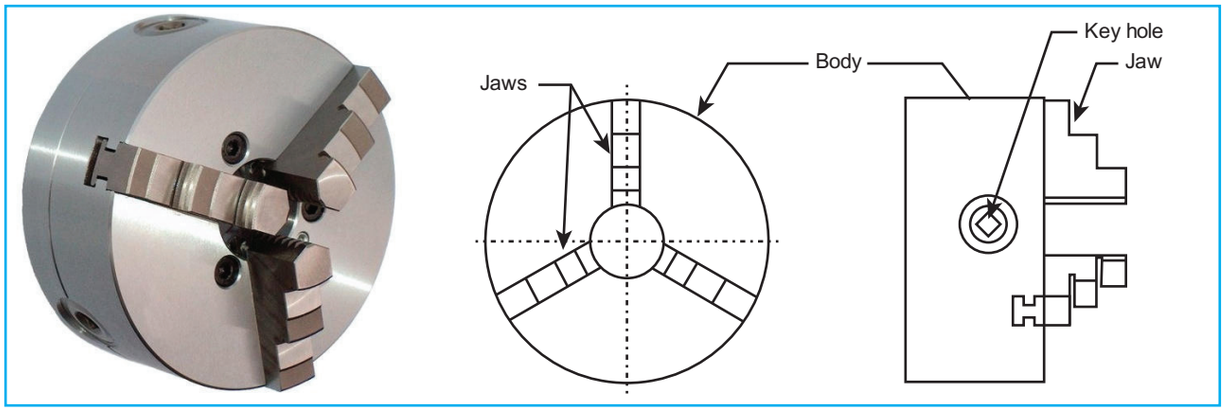

3D-Three Jaw self-centering chuck Three Jaw self-centering chuck

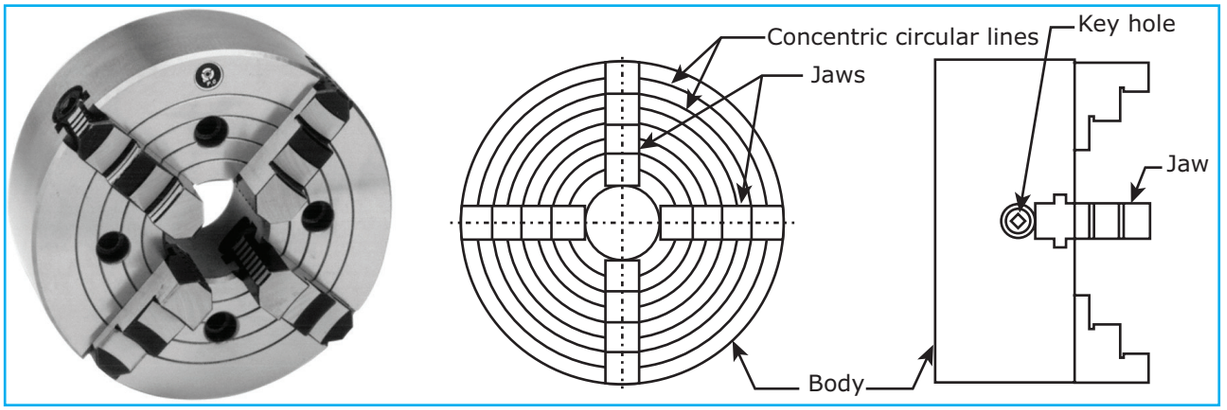

3D-Four Jaw independent chuck Four Jaw independent chuck

Magnetic Chuck

This is used for holding small, and light weight work piece. To avoid the damage of the work piece by the excess pressure of the jaws, the Magnetic chuck is used. The magnetic power is obtained by electro magnet. Magnetic material can only be held on this check.

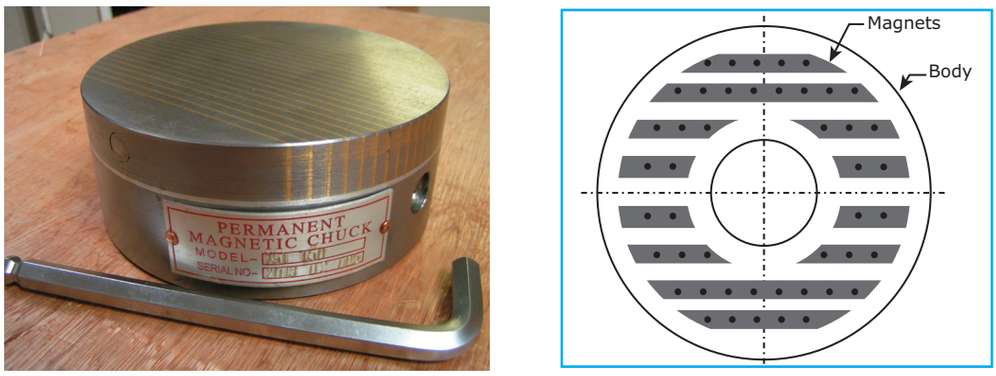

Magnetic chuck

XII BME_English version CHAPTER 01.indd 15 04-02-2023 17:56:53

Face Plate

Face plate is used for holding large, heavy and irregular shaped workpieces which cannot be conveniently held between centres. It is circular disc bored out and threaded to fit to the nose of the lathe spindle. There are many holes and slots on the face of the face plate. The work piece is held by "T"-bolts, clamps and Nuts.

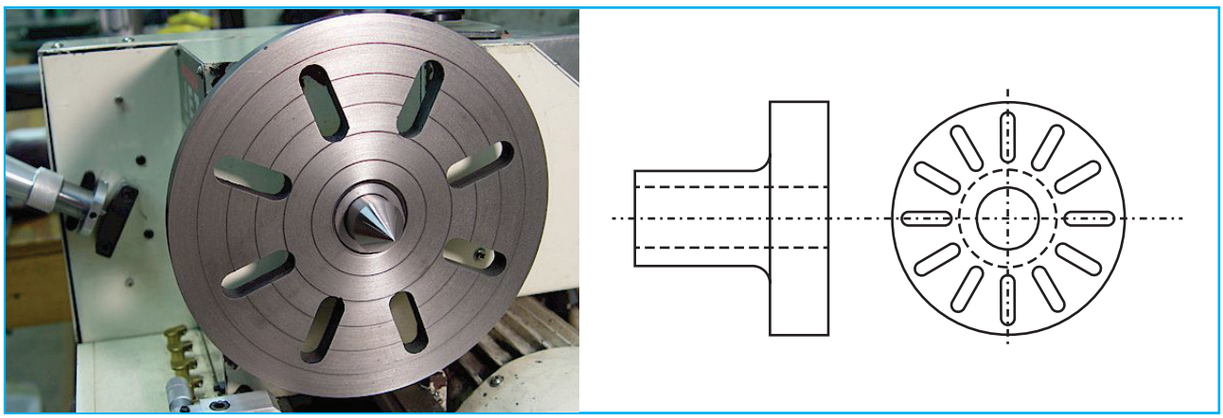

Face plate

Driving Plate

The driving plate is used for driving a workpiece when it is held between centres. It is a circular disc screwed to the nose of the lathe spindle. It is provided with small bolts or pins on its face. Work pieces are fitted by straight tail carriers and rotated by driving plates.

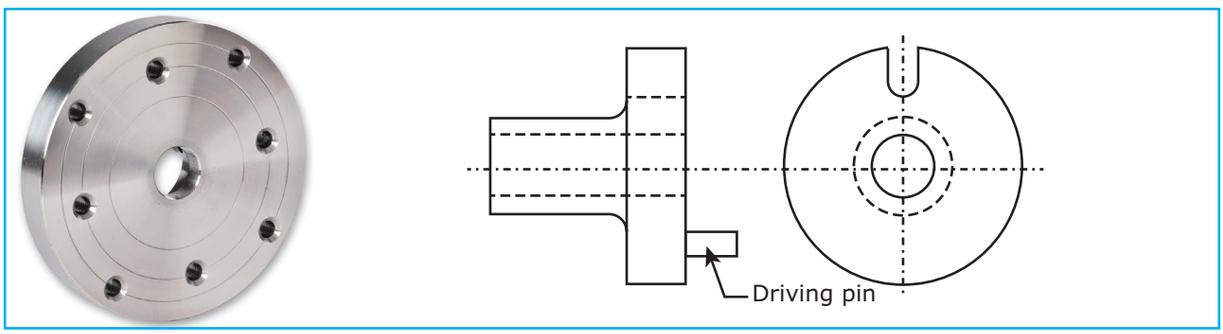

Driving plate

Catch Plate

When a workpiece is held and rotate between centres, the catch plate is used. It is a circular disc bored and threaded at the centre. Catch plates are designed with 'U'-slots on its edges. The work piece is fitted with the bent tail carrier. Its bent tail is inserted on the slot of the catch plate to receive the rotary motion.

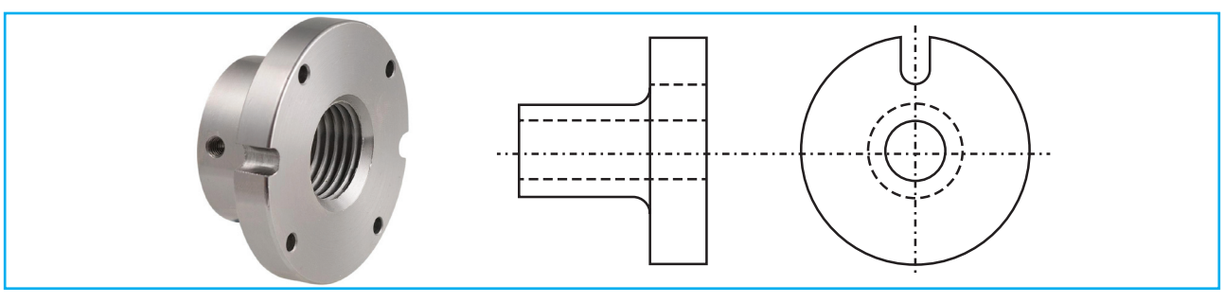

Catch plate

XII BME_English version CHAPTER 01.indd 16 04-02-2023 17:56:53

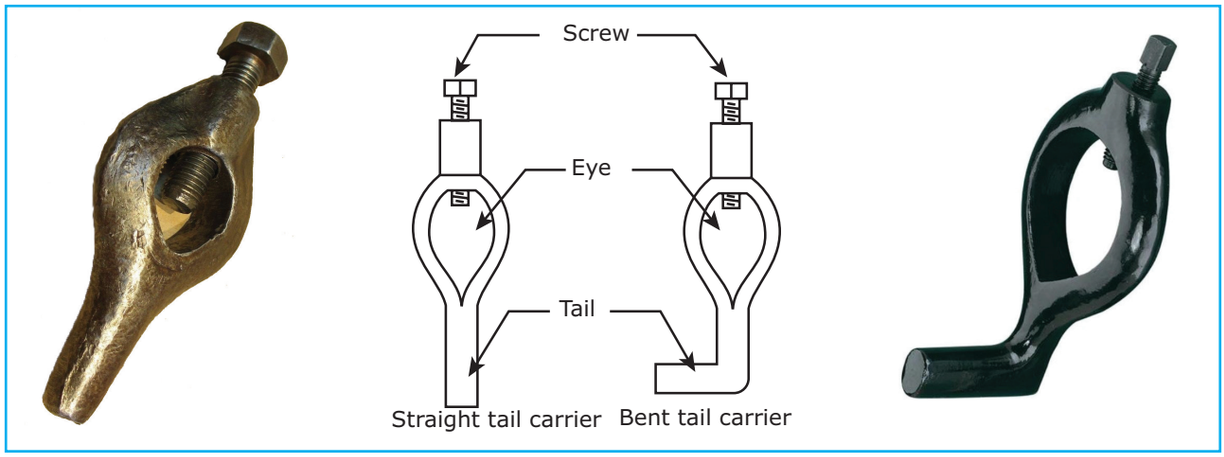

Straight tail carrier

Bent tail carrier

Carrier

When a workpiece is held and machined between centres, carriers are useful in transmitting the driving force of the spindle to the work by means of driving plates and catch plates. The work is held inside the eye of the carrier and tightened by a screw. Carriers are of two types and they are:

a) Straight tail carrier
b) Bent tail carrier

Straight tail carrier is used for driving the work by means of the pin provided in the driving plate. The tail of the bent tail carrier fits into the slot of the catch plate to drive the work.

Mandrel

Mandrel is used for holding hollow jobs which is smaller in length. The work piece is held and rotate between two centres by using the mandrel. A carrier is attached at the left side of the mandrel. The mandrel gets the drive either through a catch plate or a driving plate. The workpiece rotates along with the mandrel. There are several types of mandrels and they are

a) Plain mandrel
b) Step mandrel
c) Gang mandrel
d) Screwed mandrel
e) Collar mandrel
f) Cone mandrel
g) Expansion mandrel

Plain Mandrel

The body of the plain mandrel is slightly tapered to provide proper gripping of the workpiece. The taper will be around 1 to 2 mm for a length of 100 mm. It is also known as solid mandrel. This type is most commonly used in industries.

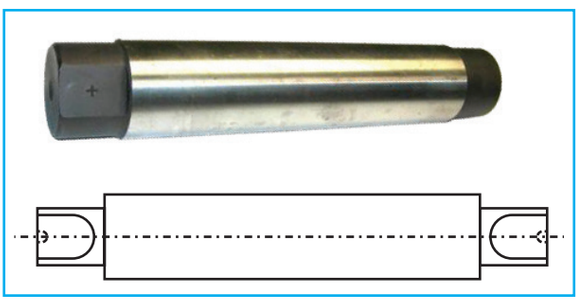

Plain mandrel

XII BME_English version CHAPTER 01.indd 17 04-02-2023 17:56:54

Screwed Mandrel

It is threaded at one end and a collar is attached to it. Workpieces having internal threads are screwed on to it against the collar for machining.

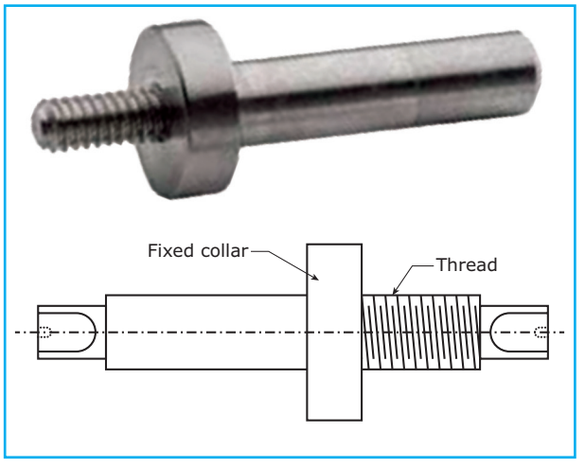

Screwed mandrel

Centre

Centres are useful in holding the work in a lathe between centres. The shank of a centre has morse taper on it and the face is conical in shape. There are two types of centres namely

1. Live centre
2. Dead centre



Live Centre

The live centre is fitted on the headstock spindle and rotates along with the work piece.

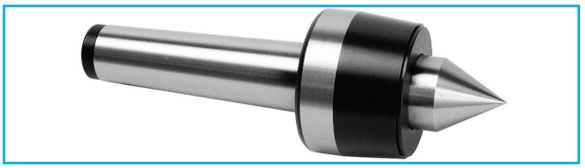

Dead Centre

The centre fitted on the tailstock spindle is called dead centre. It is useful in supporting the other end of the work. Centres are made of high carbon steel and hardened and then tempered. So the tips of the centres are wear resistant. Different types of centres are available according to the shape of the work and the operation to be performed.

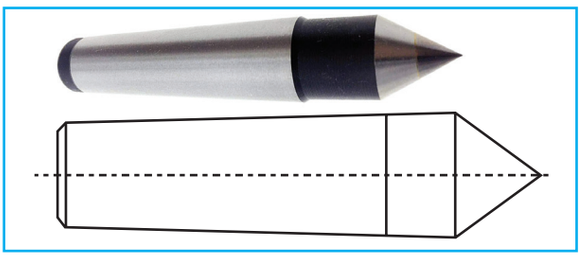

Rest

A rest is a mechanical device to support a long rods and pipes which can not be held by tailstock. It is placed at some intermediate point to prevent the workpiece from bending and vibrating due to the cutting force. There are two types of rests

1. Steady rest
2. Follower rest

Steady Rest

Steady rest is made of cast iron. It may be made to slide on the lathe bedways and clamped at any desired position where the workpiece need support. It has three jaws. These jaws can be adjusted according to the diameter of the work. Machining is

XII BME_English version CHAPTER 01.indd 18 04-02-2023 17:56:54

done upon the distance starting from the headstock to the point of support of the rest. Two or more steady rests may be used depends upon the length of the workpiece.

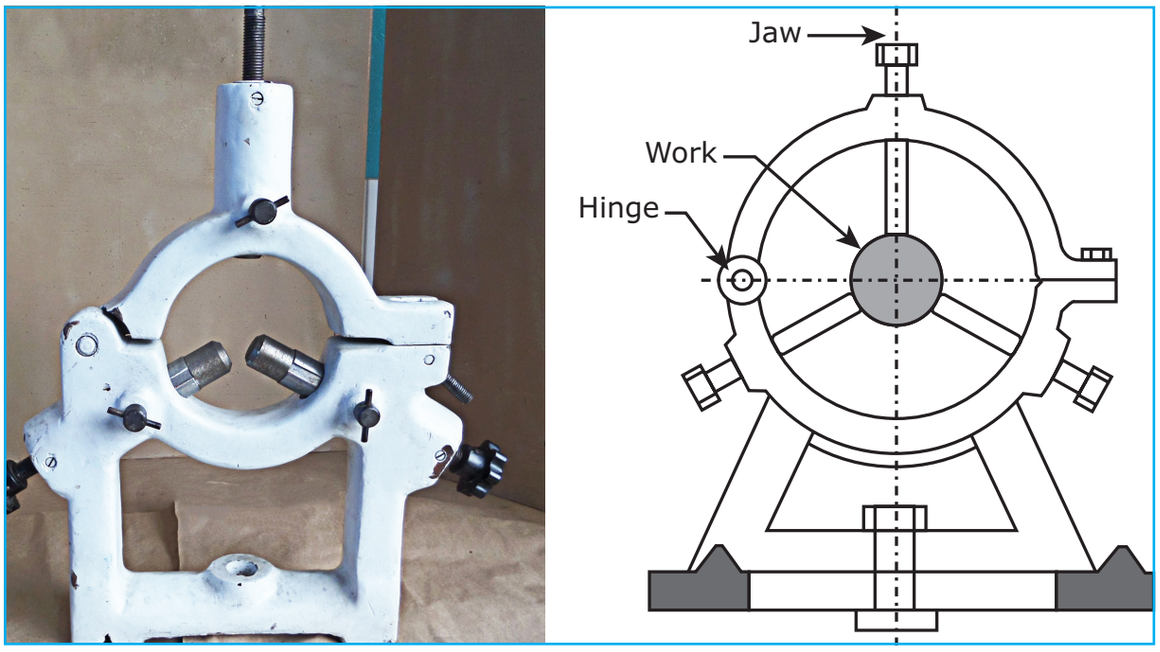

Steady Rest

Follower Rest

It consists of a 'C' like casting having two adjustable jaws to support the work piece. The rest is bolted to the back end of the carriage. During machining, it supports the work and moves along with the carriage. So, it follows the tool to give continuous support to the work to be able to machine along the entire length of the work.

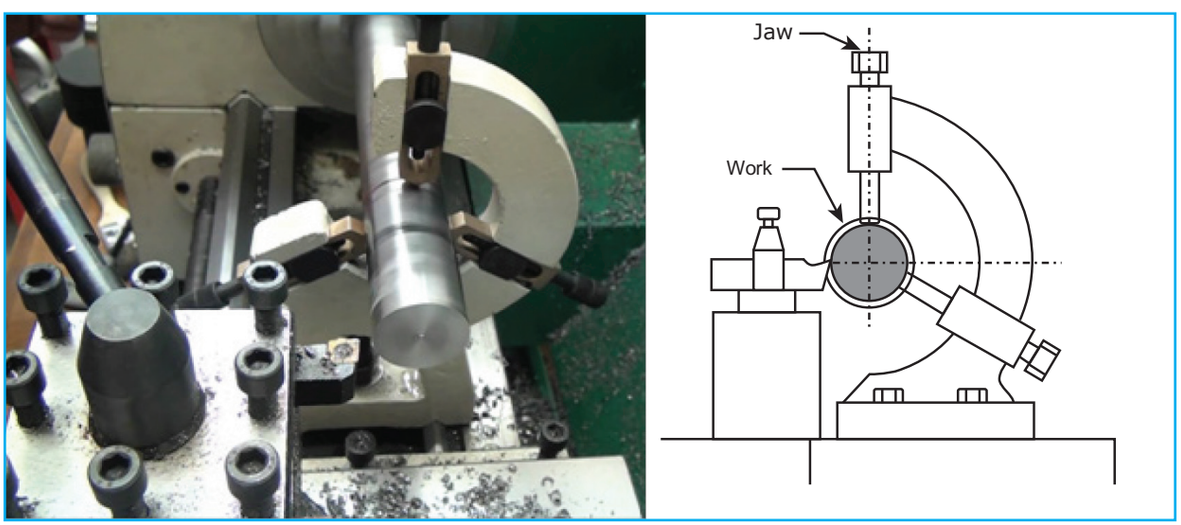

Follower rest

XII BME_English version CHAPTER 01.indd 19 04-02-2023 17:56:55

Holding a work between Live and Dead centres



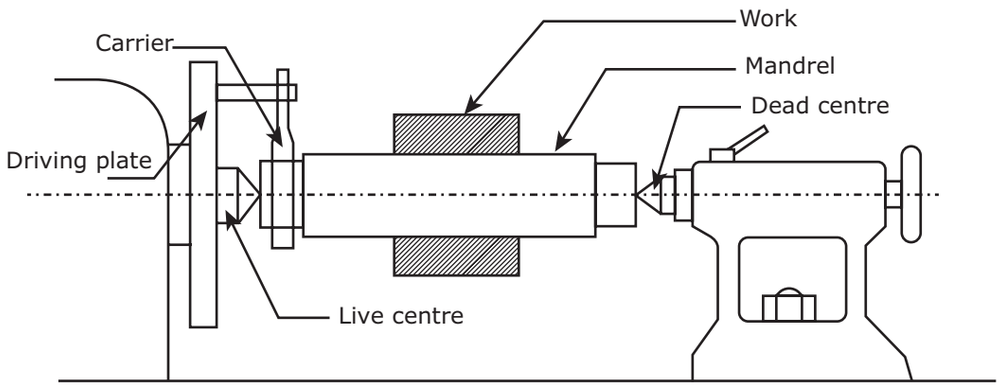

Holding a work between Live and Dead centres

1.9 Cutting speed, Feed and Depth of cut in Lathe

1.9.1.Cutting speed

The cutting speed is the distance travelled by a point on the outer surface of the work in one minute.

It is expressed in meters per minute.

Cutting speed = $\frac{\pi DN}{1000}$ m/min

Where,

D – is the diameter of the work in mm

N – is the r.p.m of the work.

1.9.2 Feed

Feed is the distance the tool advances for each revolution of the work

Feed is expressed in millimeters per revolution.

1.9.3 Depth of cut

The depth of cut is the perpendicular distance measured from the machined surface to the uncut surface of the workpiece. It is expressed in millimeters.

In a lathe, the depth of cut is expressed as follows

Depth of cut = $\frac{d_1 - d_2}{2}$

Where,

d_1 – diameter of the work surface before machining

d_2 – diameter of the machined surface

1.10 Tools used in lathe

The tool used in a Lathe is a single point cutting tool.

The tools used in lathe are classified as follows

A. According to the construction, the lathe tools are classified into three types

XII BME_English version CHAPTER 01.indd 20 04-02-2023 17:56:55

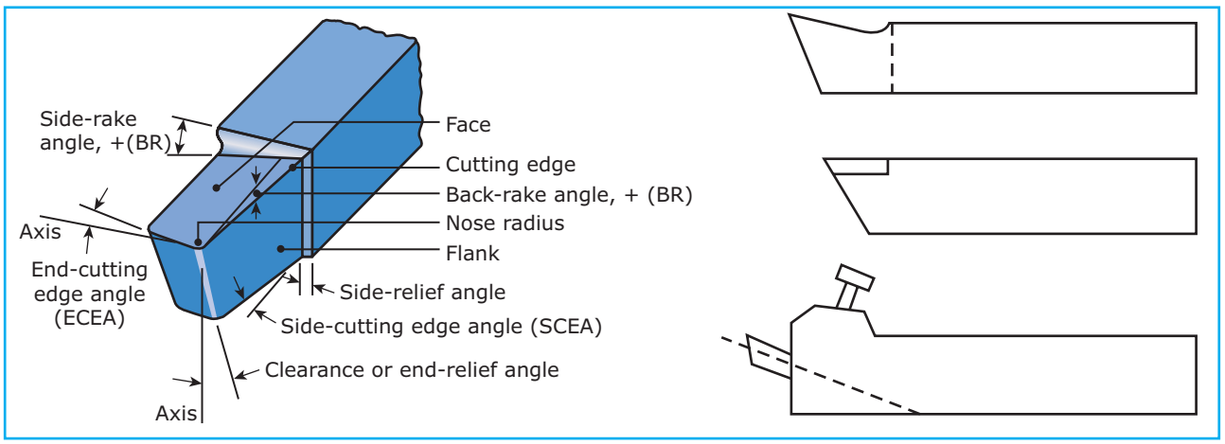

Tools used in a lathe

1. Solid tool
2. Brazed tipped tool
3. Tool bit and tool holders

B. According to the operation to be performed, the cutting tools are classified as

1. Turning tool
2. Thread cutting tool
3. Facing tool
4. Forming tool
5. Parting tool
6. Grooving tool
7. Boring tool
8. Internal thread cutting tool
9. Knurling tool

C. According to the direction of feed movement, the following tools are used

1. Right hand tool
2. Left hand tool
3. Round nose tool

1.11 Operations Performed in Lathe

In addition to the main works like thread cutting and cylindrical turning, the other works are also performed in lathe.

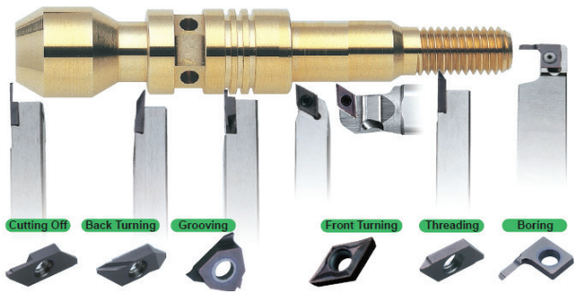

There are

1. Facing
2. Turning
   a. Straight turning
   b. Step turning
3. Chamfering
4. Grooving
5. Forming
6. Knurling
7. Under cutting
8. Taper turning
9. Thread cutting

Other works are done in lathe

1. Drilling
2. Reaming
3. Boring
4. Grinding
5. Milling
6. Key ways

1.11.1 Facing

Facing is a process of removing material from the end or shoulder of a work piece by using a facing tool to produce a flat

XII BME_English version CHAPTER 01.indd 21 04-02-2023 17:56:55

surface. The tool is fed perpendicular to the rotation axis of the work piece.

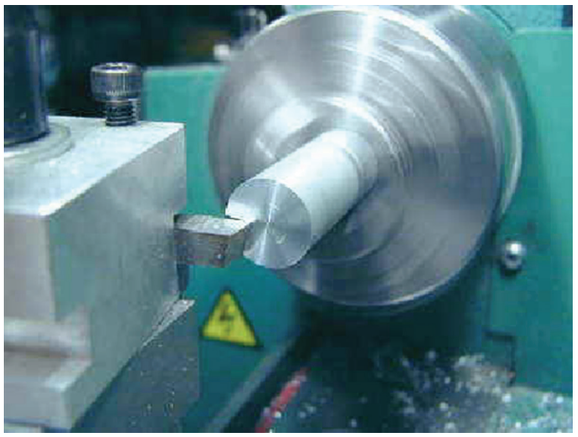

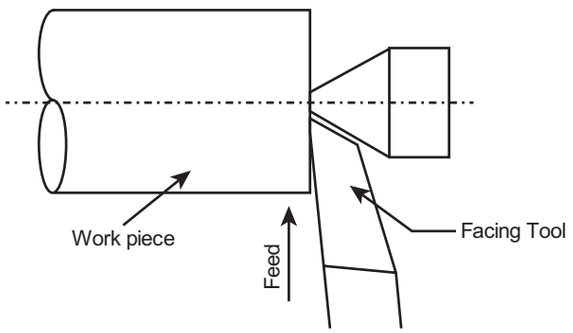

Facing

1.11.2. Turning

a) Straight Turning

Straight turning is a process of removing excess material from a work piece to produce a cylindrical surface by using a turning tool. The tool is fed parallel to the rotation axis of the work piece.

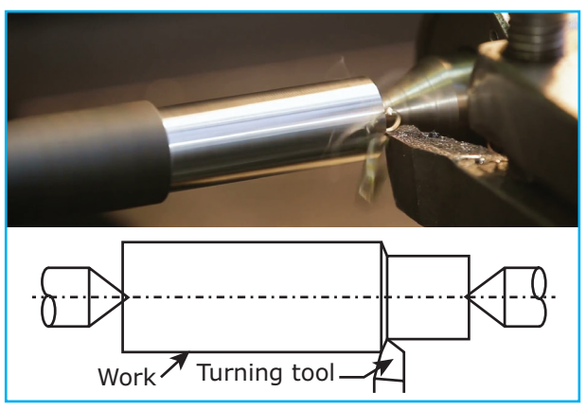

Turning

1.11.3 Chamfering

Chamfering is the operation of beveling the extreme end of the workpiece. The form tool used for taper turning may be used for this purpose. Chamfering is an essential operation after thread cutting so that the nut may pass freely on the threaded workpiece

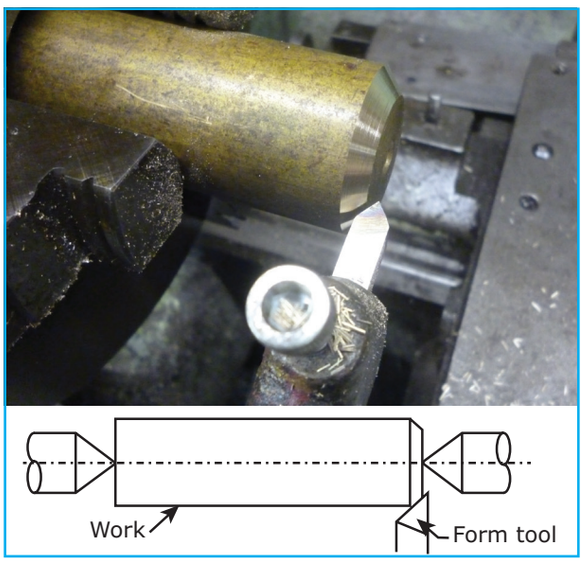

Chamfering

1.11.4.Knurling

Knurling is performed for getting a better gripping surface on the cylindrical work piece. The knurling tool holder has one or two hardened steel rollers with edges of required pattern. The tool holder is pressed against the rotating work. The rollers emboss the required pattern. The tool holder is fed automatically to the required length. Knurls are available in coarse, medium and fine pitches. The patterns may be straight, inclined or diamond shaped.

The purpose of knurling is

1. To provide an effective gripping surface.
2. To provide better appearance to the work.
3. To slightly increase the diameter of the work.

XII BME_English version CHAPTER 01.indd 22 04-02-2023 17:56:56

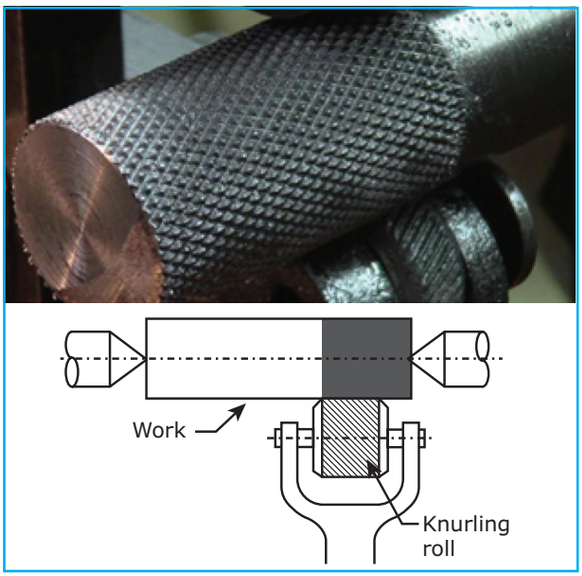

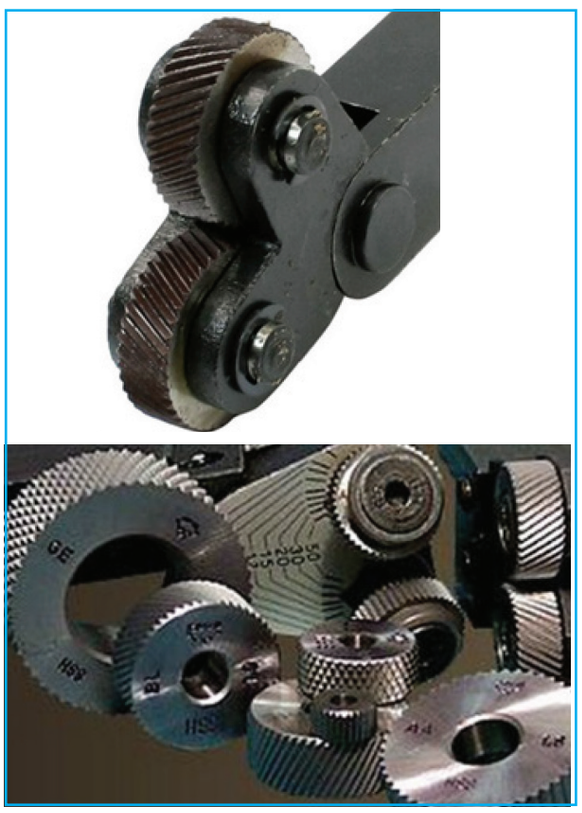

Knurling

1.11.5 Undercutting

Undercutting is done

a) At the end of a hole

b) Near the shoulder of stepped cylindrical surfaces

c) At the end of the threaded portion in bolts

It is a process of enlarging the internal diameter of the hole at the end and reducing the external diameter of the shoulder. It is useful mainly to make fits perfect. Boring tools and parting tools are used for this operation.

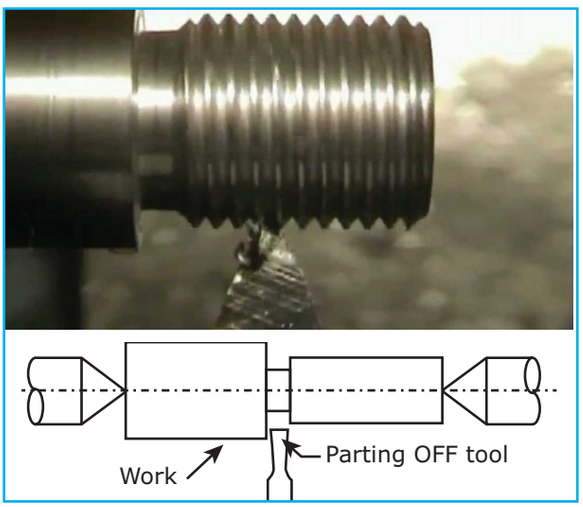

Under Cutting

1.11.6 Taper Turning

Taper

A taper may be defined as a uniform increase or decrease in diameter of a piece of work measured along its length.

a. Form tool method

b. Compound rest method

c. Tailstock set over method

d. Taper turning attachment method

e. Combined feed method

a) Form Tool Method

A broad nose tool is grinded to the required length and angle. It is set on the tool post and providing feed to the cross-slide. When the tool is fed into the work at right angles to the lathe axis, a tapered surface is generated.

This method is limited to turn short lengths of taper only. The length of the taper is shorter than the length of

XII BME_English version CHAPTER 01.indd 23 04-02-2023 17:56:57

the cutting edge. Less feed is given as the entire cutting edge will be in contact with the work.

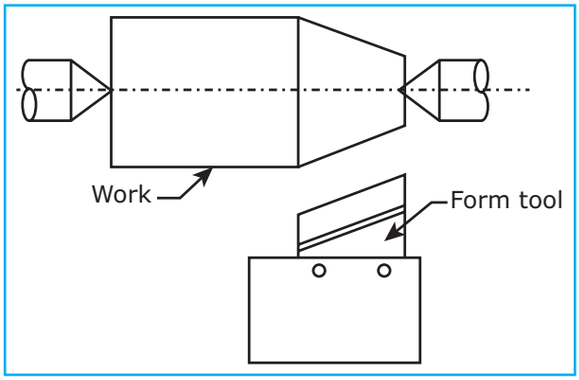

Form tool method

b) Compound Rest

The compound rest of the lathe is attached to the circular base graduated in degrees, which may be swiveled and clamped at any desired angle. The angle of taper is calculated using the formula.

$$\tan\theta = \frac{D-d}{2l}$$

Where

D – Larger diameter

d – Small diameter

l – Length of the taper

The compound is swiveled to the angle as above and clamped. Feed is given to the compound slide to generate the required taper.

Note On doing taper turning in compound rest method, feed will be given to the tool from small diameter to large diameter.

Advantage

Taper turning can be done on outer surface of the workpiece and also inner surface of the hole



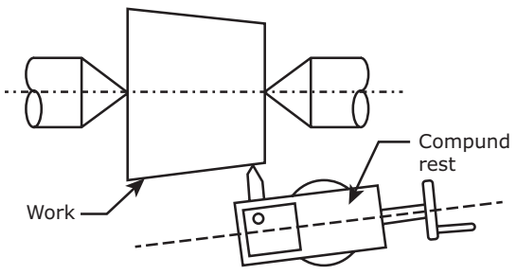

Compound Rest Method

Disadvantage

1. This method is not suitable for long workpiece, because compound slide moves only small distance.
2. This method is done manually so, it takes more time and the productivity is less.

1.11.7 Thread Cutting

Thread cutting is one of the most important operations performed in a lathe. The process of thread cutting is to produce a helical groove on a cylindrical surface by feeding the tool longitudinally.

1. The job is revolved between centres or by a chuck. The longitudinal feed should be equal to the pitch of the thread to be cut per revolution of the work piece.
2. The carriage should be moved longitudinally obtained feed through the leadscrew of the lathe.

XII BME_English version CHAPTER 01.indd 24 04-02-2023 17:56:57

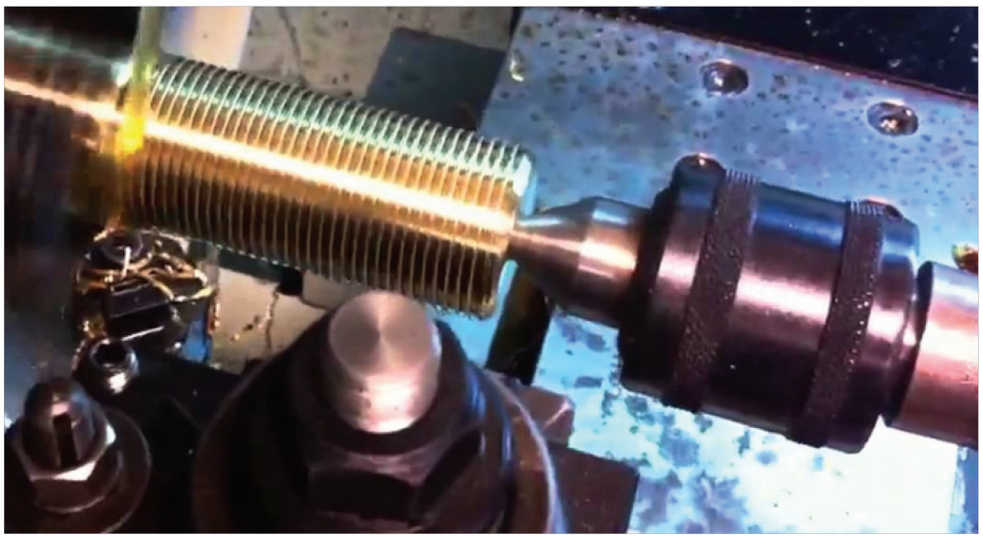

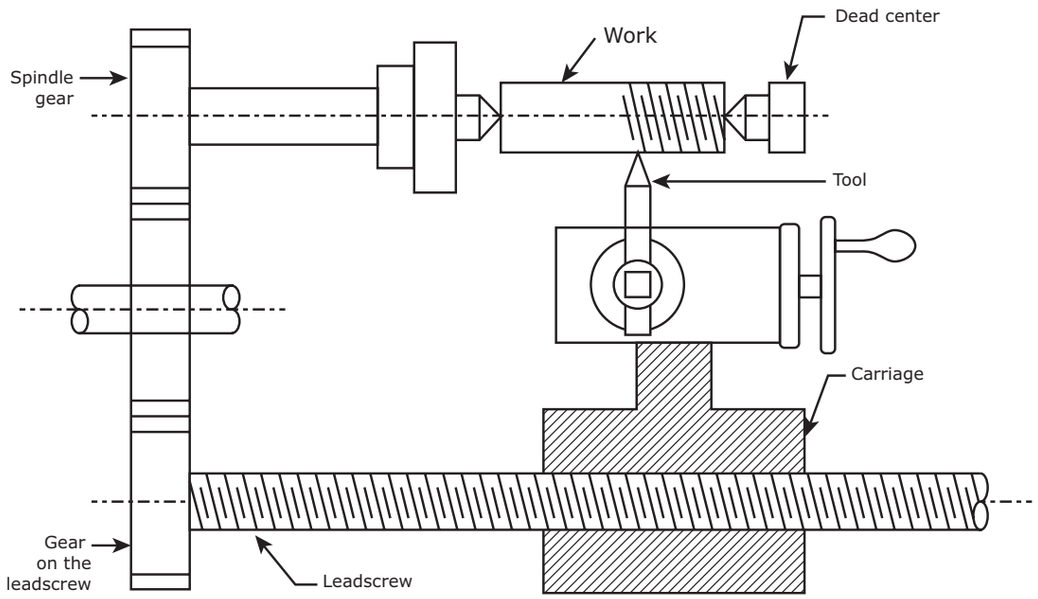

Thread Cutting

3. A definite ratio between the longitudinal feed and rotation of the head stock spindle should be found out. Suitable gears with required number of teeth should be mounted on the spindle and the leadscrew.

Calculation for change – gear

$$\frac{\text{TPI on leadscrew}}{\text{TPI on work}} = \frac{\text{driver teeth}}{\text{driven teeth}}$$

By using the above formula, calculate the speed ratio of the spindle and leadscrew and connect the gear on the spindle and the gear on leadscrew.

4. A proper thread cutting tool is selected according to the shape of the thread. It is mounted on the toolpost with its cutting edge at the lathe axis and perpendicular to the the work.

XII BME_English version CHAPTER 01.indd 25 04-02-2023 17:56:57

5. The position of the tumbler gears are adjusted according to the type of the thread (right hand or left hand).
6. Suitable spindle speed is selected and it is obtained through back gears.
7. Half nut lever is engaged at the right point as indicated by the thread chasing dial.
8. Depth of cut is set suitably to allow the tool to make a light cut on the work.
9. When the cut is made for required length, the half nut lever is disengaged. The carriage is brought back to its original position and the above procedure is repeated until the required depth of the thread is achieved.
10. After the process of thread cutting is over, the thread is checked by suitable gauges.

Calculation

Example:-

Pitch of the lead screw is 6 TPI. The pitch of the thread to be cut on the work piece is 12TPI. Find the change gear.

$$\frac{\text{(TPI on Leadscrew)}}{\text{(TPI on work)}} = \frac{\text{(Driver Teeth)}}{\text{(Driven Teeth)}}$$

$=6/12 = (6\times 10)/(12\times 10) = 60/120$

The driver gear which is attached to the head stock spindle that drives the work piece should have 60 teeth. The driven gear which is attached to the lead screw should have 120 teeth.

Note

The set of change gears 20, 25, 30 and multiply of 5 upto 120 teeth are available.

In addition to that 20 or 25 or 40teeth extra one gear and for cutting metric thread one 127teeth gear to be needed.

1.12 Coolant

Due to the friction between the tool and the work surface during machining, heat is generated. The tool loses its cutting capacity and the machined surface is hardened. Coolant is used on the surfaces to avoid damage to the cutting edge of the tool as well as to the machined surface.

Soluble oil is mixed with water to be used as a suitable coolant. One part of the oil is mixed with fifteen parts of water to be used as coolant. Usage of water as coolant may result in rust formation on the metal parts. Lubricants cannot be used as coolants.

ACTIVITIES

1. To make an arrangement the students to visit Government Industrial Training Institute, Polytechnics and Engineering colleges nearby the school and learn about the types of lathe and its working principle.
2. To give practice to the students performed different types of operations in a lathe.

XII BME_English version CHAPTER 01.indd 26 04-02-2023 17:56:57

QUESTIONS

EL09U

Part I.

Choose the correct option 1 Mark

1. The inventor of lathe is
   a. Henry Maudslay
   b. Eli whitney
   c. James nasmith
   d. Arthur James Arnot
2. The assembly which consists of saddle, cross-slide, compound slide and tool post is _____
   a. head stock
   b. tailstock
   c. bed
   d.carriage
3. The bed of the lathe is made of
   a. Cast Iron
   b.High carbon Steel
   c.High speed steel
   d.stellite
4. _____ is used for changing the direction of rotation of the lead screw
   a.Tumbler gear
   b. Back gear
   c. Gear box
   d. Stepped Cone Pulley
5. A part used for taper turning
   a. Cross slide
   b.Compound rest
   c. Saddle
   d. Apron
6. The formula for finding the cutting speed in a lathe is
   a. $\frac{\pi DN}{1000}$ b. $\frac{d_1 - d_2}{2l}$
   c. $\pi r^2 h$ d. $\frac{D-d}{2} \times \frac{L}{l}$
7. Polishing lathe is a type of
   a.Engine Lathe
   b.Tool room Lathe
   c.High speed Lathe
   d.Automatic Lathe
8. Turret and capstan lathes are classified under
   a. automatic lathes
   b. semi-automatic lathes
   c. bench lathe
   d. tool room lathe
9. The spindle speed of high speed lathe is around
   a. 6000-1000rpm
   b. 1200-3200rpm
   c. 2000-2400rpm
   d. 3500-4000rpm
10. The tool used in lathe is a
    a. Multipoint cutting tool
    b. Single point cutting tool
    c. Slitting saw tooth cutting tool
    d. Parting tool

XII BME_English version CHAPTER 01.indd 27 04-02-2023 17:56:57

Part –II

Answer the following questions in one or two sentences: 3Marks

11. What is meant by lathe?
12. What is turning?
13. What are the uses of tool room lathe?
14. What is swing diameter?
15. What are the special features of V-bed in a lathe?
16. What are the uses of back gear in a lathe?
17. What is the use of Lead screw in a lathe?
18. Mention the use of magnetic chuck.
19. Mention the formula for cutting a thread in a lathe.
20. Pitch of the lead screw is 4TPI. The pitch of the thread to be cut on the work piece is 6TPI. Find the change gear.

Part-III

Answer the following questions in about a page 5Marks

21. List out the types of lathe.
22. Mention any five differences between a turret and a capstan lathe.
23. What are the parts in the carriage of a lathe?.
24. Mention any of the specifications of a lathe.
25. Sketch and explain the taper-turning by using the form-tool method.

Part-IV

Answer the following questions in detail. 10Marks

26. Draw a neat sketch of a lathe and label its parts.
27. Explain with neat sketch of a step-cone pulley drive mechanism.
28. Explain any two operations performed in lathe with neat sketch.
29. Explain any two work holding devices in a lathe with suitable diagrams.
30. Sketch and explain the taper-turning by using the Compound rest method

XII BME_English version CHAPTER 01.indd 28 04-02-2023 17:56:57



CHAPTER 02

DRILLING MACHINE

WDA96

Learning Objective

- Students to learn about the construction of drilling machine and its parts
- To know about the types of drilling machines
- To understand the various operations in drilling machine in industries

CONTENTS

2.1 Introduction
2.2 Process of Machining
2.3 Construction of a drilling machine
2.4 Types of drilling machines
2.5 Radial drilling machine
2.6 Size of a drilling machine
2.7 Work – holding devices.
2.8 Tools used in a drilling machine
2.9 Tool – holding devices
2.10 Drilling machine operations
2.11 Cutting speed
2.12 Feed
2.13 Depth of cut

2.1 Introduction

The Drilling Machine is one of the most important machine tools in a workshop. As regards its importance it is second only to the lathe. It was designed to produce a cylindrical hole of required diameter and depth on work pieces.

Though holes can be made by different machine tools in a shop, drilling machine is designed specifically to perform the operation of drilling and similar operations. Drilling can be done easily at a low cost in a shorter period of time in a drilling machine.

Drilling can be called as the operation of producing a cylindrical hole of required diameter and depth by removing metal by the rotating the cutting edges of a drill bit.

XII BME_English version CHAPTER 02.indd 29 06-01-2023 13:13:33

DO YOU KNOW?

The inventor of basic drilling machine is Arthur James Arnot and William Blanch Brain from Australia in the year of 1889.



Arthur James Arnot



3D Method of Drilling

2.2 Process of Drilling

The cutting tool known as drill bit is fitted into the spindle of the drilling machine. A mark of indentation is made at the required location with a center punch. The rotating drill is pressed at the location and is fed into the work. The hole can be made up to a required depth.

2.3 Construction of a Drilling Machine

The basic parts of a drilling machine are a base, column, drill head and spindle.

The base made of cast iron may rest on a bench or floor depending upon the design. Larger and heavy duty machines are grounded on the floor. The column is mounted vertically upon the base. It is accurately machined and the table can be moved up and down on it. The drill spindle an electric motor and the mechanism meant for driving the spindle at different speeds are mounted on the top of the column. Power is transmitted from the electric motor to the spindle through a flat belt (or) a 'V' belt. Then feed is given to the spindle and hole can be made up to a required depth and diameter.

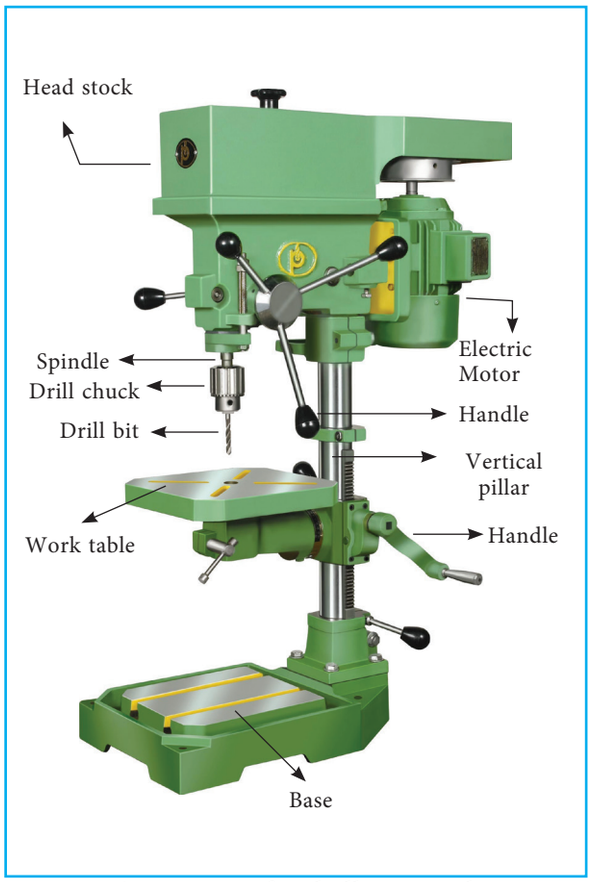

3D Structure of a drilling machine

XII BME_English version CHAPTER 02.indd 30 06-01-2023 13:13:34

2.4 Types of Drilling Machine

Drilling machines are manufactured in different types and sizes according to the type of operation amount of feed. Depth of cut, spindle speeds, method of spindle movement and the required accuracy.

The different types of drilling machines are

1. Portable drilling machine (or) Hand drilling machine.
2. Sensitive drilling machine
3. Upright drilling machine
   a) Round column section
   b) Box column section
4. Radial drilling machine
5. Gang drilling machine
6. Multi – spindle drilling machine
7. Deep hole drilling machine.
   a) Vertical
   b) Horizontal
8. Automatic drilling machine.

2.4.1 Portable (or) Hand Drilling Machine

The portable drilling machine is shown in the given figure.



Portable drilling machine

Portable drilling machine can be carried and used anywhere in the workshop. It is used for drilling holes on heavy work pieces in any position. Which is not possible in a standard drilling machine. The entire drilling mechanism is compact and small in size and so can be carried anywhere. This type of machine is widely adapted for automobile built – up work. The motor is generally universal type.

These machines can accommodate drills from 12mm to 18 mm diameter. The machine is operated at high speed as smaller size drills are only used. Feed is given by hand pressure.

2.4.2 Sensitive Drilling Machine (or) Bench Drilling Machine

A sensitive drilling machine is shown in the given figure.

It is designed for drilling small holes at high speeds in jobs. The base of the machine is mounted either on a bench or on the floor. It can handle drills of diameter from 1.5mm to 15.5 mm the drill is fed with work purely by hand. The operator can sense of the progress of the drill into work because of hand feed. So it is called sensitive drilling machine.

Super sensitive drilling machines are designed to drill holes as small as 0.35mm in diameter and the spindle of the machine is rotated at a high speed of 2000 rpm or above.

The important parts of the machine is base, column, Work-table, spindle, drill-head assembly and driving mechanism.



The inventor of sensitive drilling machine is martin. D.Eliedge of USA. Year 1958.

XII BME_English version CHAPTER 02.indd 31 06-01-2023 13:13:34

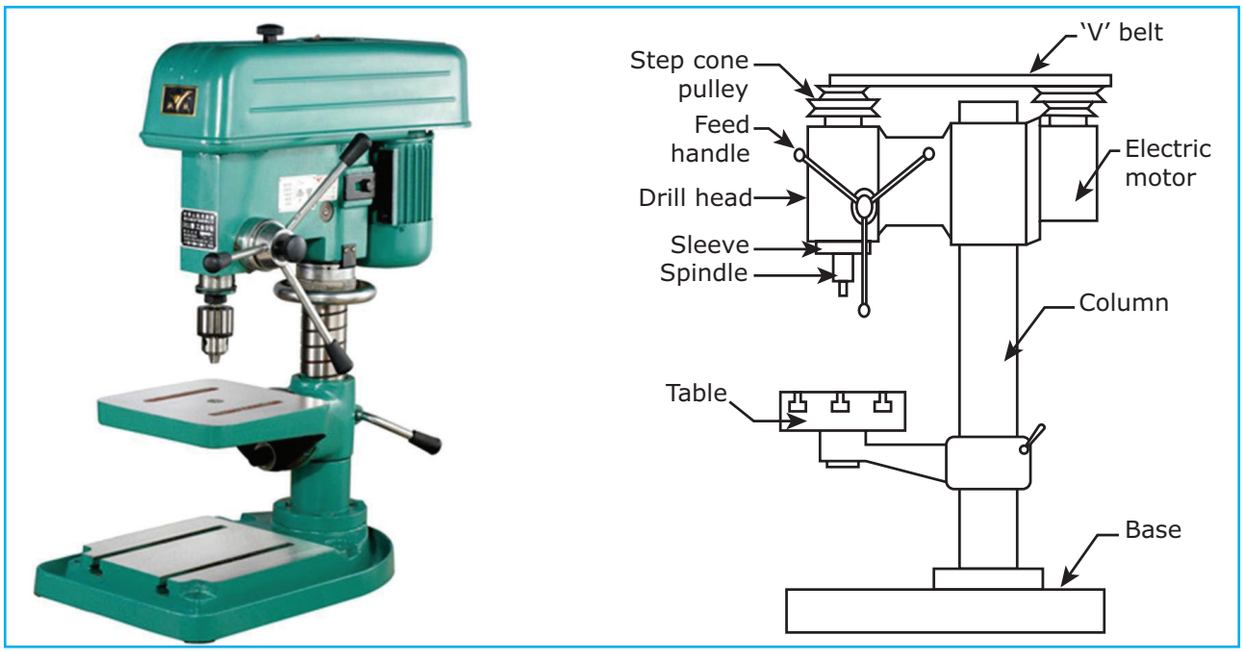

Bench Drilling Machine

Base

The base is made of cast iron and so can withstand vibrations. It may be mounted on a bench or on the floor holes are provided. It supports all the other parts of the machine on it.

Column

The column may be round or box section and it stands vertically on the base at one end. It supports the work table and the drill head. The drill head has drill spindle and the driving motor on either side of the column.

Work Table

The table is mounted on the vertical column and can be adjusted by hand up and down on it. The table has T - slots on it for holding the work pieces or to hold any other work holding device. The table can be adjusted vertically to accommodate work pieces of different heights and can be clamped at the required position.

Drill head

Drill head is mounted on the top side of the column. The drill spindle and the driving motor are connected by means of a V-belt and cone pulleys. The motion is transmitted to the spindle from the motor by the belt.

The pinion attached to the handle meshes with the rack on the sleeve of the spindle for providing the drill to the required down feed. There is no power feed arrangement in this machine. The spindle rotates at a speed of 50 to 2000 rpm.

2.5 Radial Drilling Machine

The radial drilling machine is intended for drilling and tapping on medium to large and heavy work pieces. It is used in mass production factories and to drill the holes at a diameter of 50 mm and above.

A radial drilling machines is illustrated in the given figure.

XII BME_English version CHAPTER 02.indd 32 06-01-2023 13:13:34

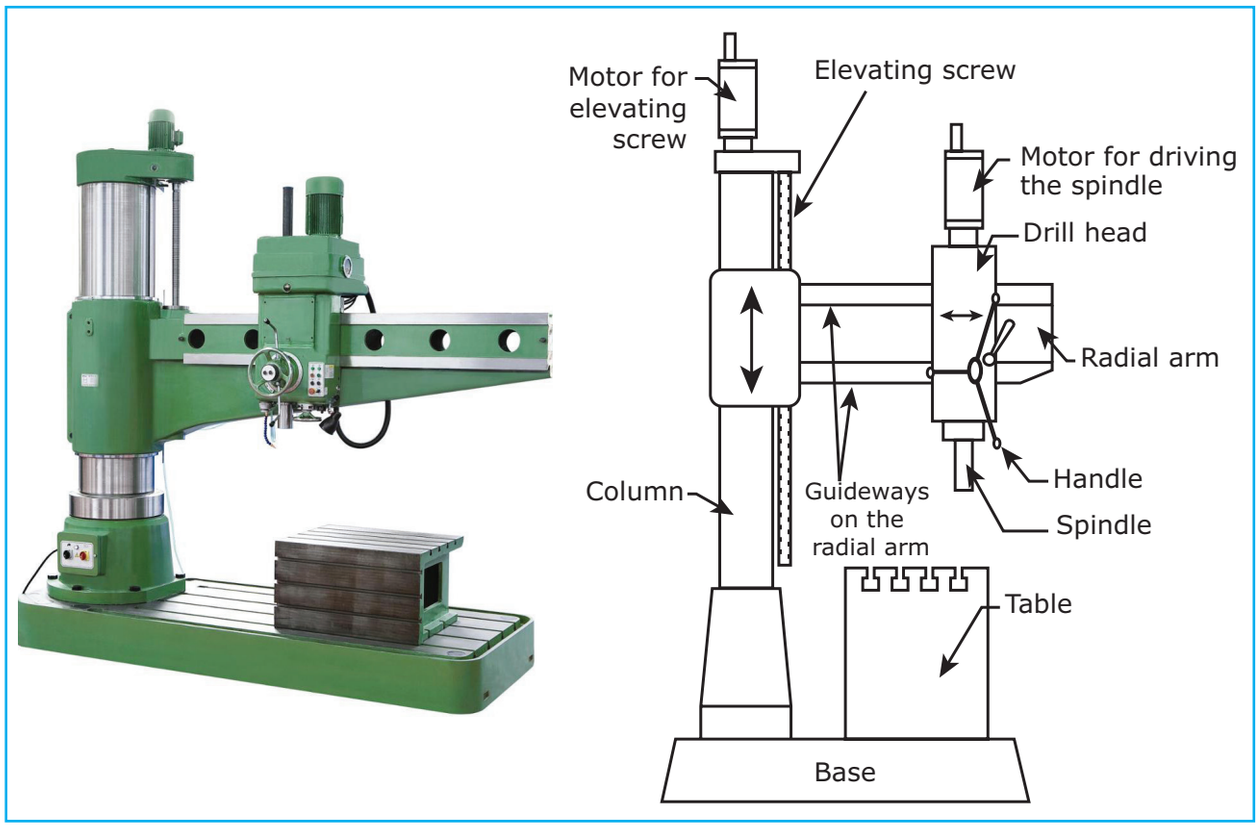

Radial Drilling Machine

It consists of parts like base, vertical column, radial arm, Drill head. Elevating screw and driving mechanism of the spindle.



The inventor of Radial drilling machine is Geoffry Reeves of Australlia, year 1890.

Base

The base is a large rectangular casting and mounted on the floor on the shop. Its top surface is accurately finished to support a column at one end and the table at the other end. T -slots are provided on it for clamping the work pieces.

Column

The column is a cylindrical casting which is mounted vertically at one end of the base. It supports the radial arm and allows it to slide up and down on its face. The vertical adjustment of the radial arm is effected by rotating a screw passing through a nut attached to the arm. An electric motor is mounted on the top of the column for rotating the elevating screw.

Radial arm

The radial arm is mounted on the column parallel to the base and can be adjusted vertically. The vertical front surface is accurately machined to provide guide ways for the drill head. The drill head

XII BME_English version CHAPTER 02.indd 33 06-01-2023 13:13:34

can be adjusted along these guide ways according to the location of the work. The arm may be swung at 360° around the column. It can also be moved up and down according to the different heights of the work pieces.

Drill head

The drill head is mounted on the radial arm and houses all mechanism for driving the drill at different speeds and feed.

A motor is mounted on the top of the drill head for this purpose. To adjust the position of drill spindle with respect to the work, the drill head may be made to slide on the guide ways of the arm. The drill head can be clamped in position after the spindle is properly adjusted.

2.5.1 Special Features

1. To drill holes at different places of the work pieces without any movement of the work.
2. To drill inclined holes on the work piece with the help of tilting the drill head at an angle.
3. To make internal threads in a hole by using tapping attachments.

2.6 size of drilling machine

Drilling Machines are specified according to their type.

1. A portable drilling machine is specified by the maximum diameter of the drill that it can hold.
2. The size of the sensitive and upright drilling machines are specified by the size of the largest work piece that can be centered under the spindle. It is slightly smaller than twice the distance between the face of the column and the axis of the spindle.
3. The size of a radial drilling machine is specified by the diameter of the column and length of the arm, spindle speeds and feeds etc.
4. Generally a drilling machine is specified by the maximum diameter of the hole that it can drill in the machine, diameter of table, maximum travel of the spindle, numbers and range of spindle speeds and feeds available.
5. Morse taper number of the drill spindle, floor space required weight of the machine and horse power of the motor.

2.7 Work holding devices

The work should be held firmly on the machine table before performing any operations on it. As the drill exerts very high quantity of torque while rotating the work should not be held by hand. If the work pieces are not held by a proper holding device, it will start rotating along with the tool causing injuries to the operator and damage to the machine.

The devices used for holding the work in a drilling machine are

1. Drill vise
2. T-bolt, nut and clamps
3. step block
4. Plain vise
5. V – block
6. Angle plate
7. Drill jigs.

XII BME_English version CHAPTER 02.indd 34 06-01-2023 13:13:35

Drill vise

Vise is one of the most important devices used for holding work piece on a drilling machine table. The work is clamped in a vise between a fixed jaw and a movable jaw.

Parallel blocks are placed below the work. So that the drill may completely pass through the work without damaging the table. Different types of vises are used for holding different types of work and or performing different operations.

The different types of vises are

1. Plain vise
2. Swivel vise
3. Tilting vise
4. Universal vise

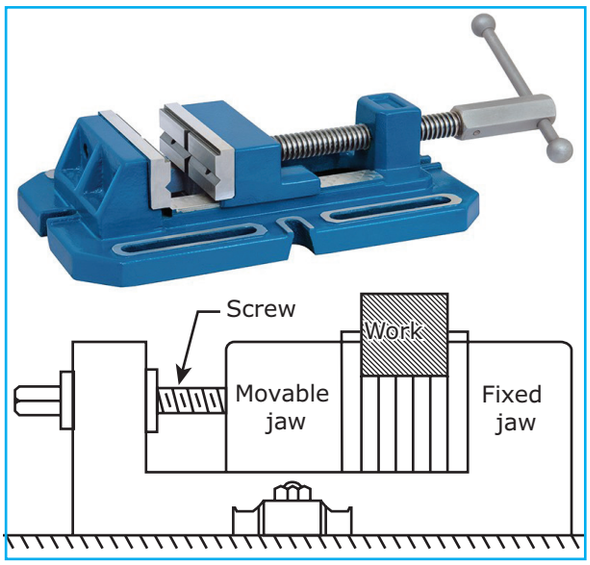

Plain Vise



Universal Vise

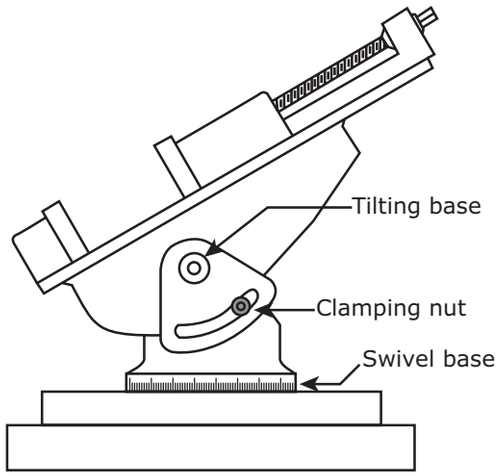

Universal Vise

T-bolts, clamps and step blocks

The work pieces can be held directly on the machine table by means of T-bolts clamps and step blocks. The top of the machine table has T-slots into which T-bolts may be fitted. The bolts of diameter 15 to 20 mm are used. The clamps and step – blocks are made of mild steel. T-bolts pass through a central hole on the clamp. The clamp is made to rest horizontally on the work surface by placing a suitable step block at the end of the work. Different height of the work pieces are held by levelling the clamp on different steps of the step block

Types of clamps

1. Plain
2. Slot clamp
3. Goose – neck clamp
4. Finger clamp

The following figure shows how to hold the work piece by means of T-slots, clamp and step-block.

Step block

It has long steps formation. It is used to hold the work firmly while using the T-bolt and clamps the step block supports the other end of the clamp. Work pieces

XII BME_English version CHAPTER 02.indd 35 06-01-2023 13:13:35

XII BME_English version CHAPTER 02.indd 36 06-01-2023 13:13:35

of different sizes are held by levelling the clamp on different steps of the step block.

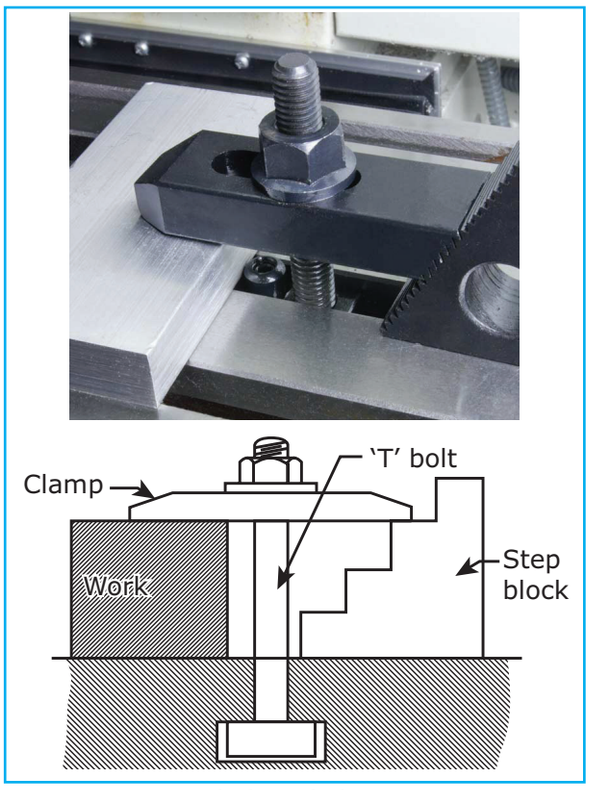

T-bolt and clamp

V-block

V-block is used for holding cylindrical work pieces. The work may be supported on two (or) three V-blocks according to the length of the work. The work is held on the V-groove and is clamped by straps and bolts. They are made of cast iron (or) steel and are accurately machined. The following figure shows the use of a V-blocks.

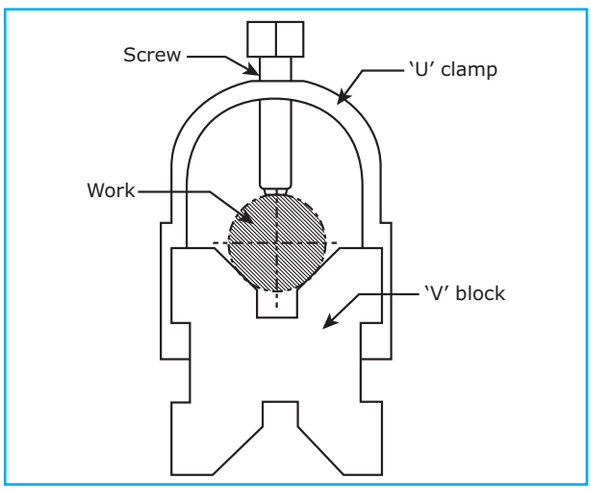

V-block

Angle plate

The angle plates have two faces at right-angle to each other and made of cast iron. All the sides of a angle plate are machined accurately. Slots and holes are provided on both the faces of the angle plate. Work is clamped on one of its faces by means of bolts and nuts. The use of angle plate is shown in figure.

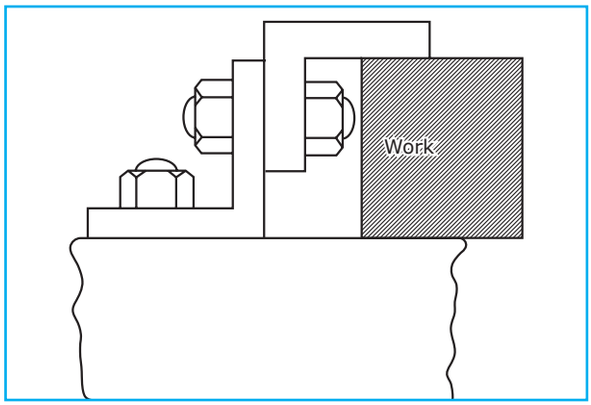

Angle Plate

Drill Jig

Drill jigs are used for holding the work in mass production process. A jig is specially designed to hold the work securely and to guide the tool at any desired position. Holes may be drilled at the same relative positions on each of the identical work pieces.

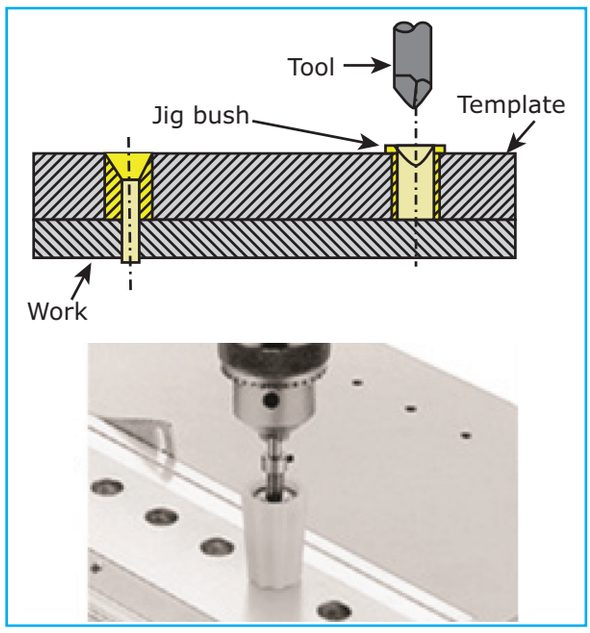

Drill Jig

XII BME_English version CHAPTER 02.indd 37 06-01-2023 13:13:35

Drill Jig

The work is clamped and removed easily. The cost of making a drill jig is more but a low order of skill is sufficient to work with a drill jig.

The following different types of jigs are used to hold the work pieces in drilling machine.

1. Plate Jig
2. Channel Jig
3. Diameter Jig
4. Box Jig
5. Indexing Jig
6. Template Jig

2.8 Tools used in a drilling machine

The following tools are used for performing different types of operations in a drilling machine. They are

1. Drill
2. Reamer
3. Counter bore
4. Counter Sink
5. Tap

Drill

A drill is a tool used to originate a hole in a solid material. A helical groove known as 'flute' is cut along the length of the drill.

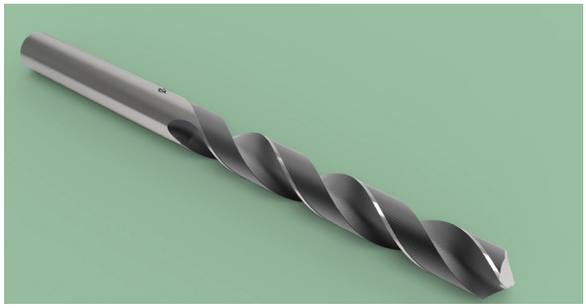



Drill Bit

Different types of drills are,

1. Flat drill
2. Straight fluted drill
3. Twist drill
4. Centre drill

Twist drills are generally used in shop work. They are made of High speed steel (HSS), (or) High Carbon Steel (HCS).



The inventor of Twist drill is "Steve A. Morse" of England, year 1861.

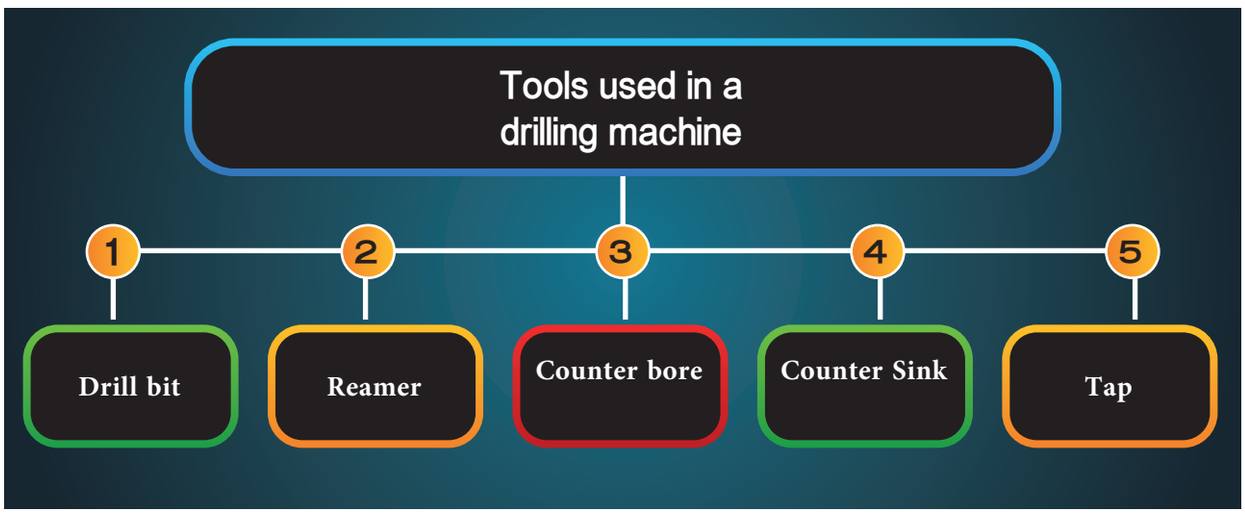

XII BME_English version CHAPTER 02.indd 38 06-01-2023 13:13:36

There are two types of drills namely

1. Straight shank twist drill
2. Taper shank twist drill

The diameter of the straight shank drill ranges from 2 to 16mm. Taper shanks are provided on drills of larger diameter of 16 mm above.

Reamer

The tool used for enlarging and finishing a previously drilled hole is known as a reamer. It is a multi-point cutting tool and removes smaller amount of material. It gives a better finish and accurate dimension of the hole.



Reamer

Counter bore

A counter bore is a multi tooth cutting tool used for enlarging the top of the previously machined hole. It has three or four cutting teeth. The flutes on them may be straight or helical. Straight fluted tools are used for machining softer material like brass and aluminium and for short depth of cut. Helical fluted counter bores are used for longer holes.



Counter bore

Counter Sink

A counter sink has multi-point cutting edges on its conical surfaces. It has a similar construction of counter bore except for the angle of the cutting edges. The angle of counter sinks will generally be 60°, 82° or 90°. It is used for enlarging the top of the holes conically.

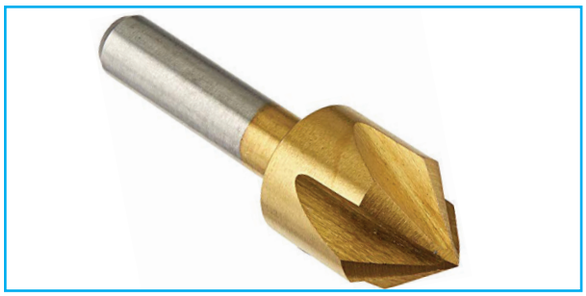

Counter sink

Tap

A tap has threads like a bolt. It has three or four flutes cut across the threads. It can cut threads on the inside of a hole. The flutes on the threads form the cutting edges. It is a multi point cutting tool. It will dig into the walls of the hole as the lower part of the tap is slightly tapered. The shank of the tap is square shaped to enable it to be held by a tap wrench.

Taps are made up of carbon steel (or) high speed steel. Two types of taps are used. They are (i) hand tap and (ii) machine tap

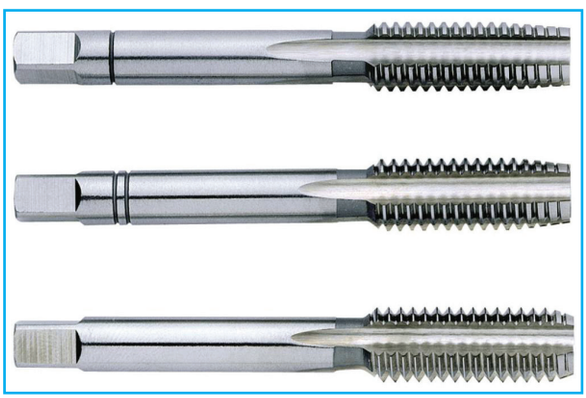

Tap

XII BME_English version CHAPTER 02.indd 39 06-01-2023 13:13:36

2.8.1 Twist drill and its parts

Twist drill is shown in the given figure.

Body

It is the part of the drill from its extreme point to the commencement of the neck. If present otherwise it is the part extending up to the commencement of the shank Helical grooves are cut on the body of the drill.

Shank

It is part of the drill by which it is held and driven. It is found just above the body of the drill. The shank may be straight (or) taper. The shank of the drill can be fitted direct into the spindle (or) by a tool holding device.

Tang

The flattened end of the taper shank is known as tang. It is meant to fit into a slot in the spindle (or) socket. It ensuresa positive drive of the drill.

Neck

It is the part of the drill which is diametrically undercut between the body and the shank of the drill. The size of the drill is marked on the neck.

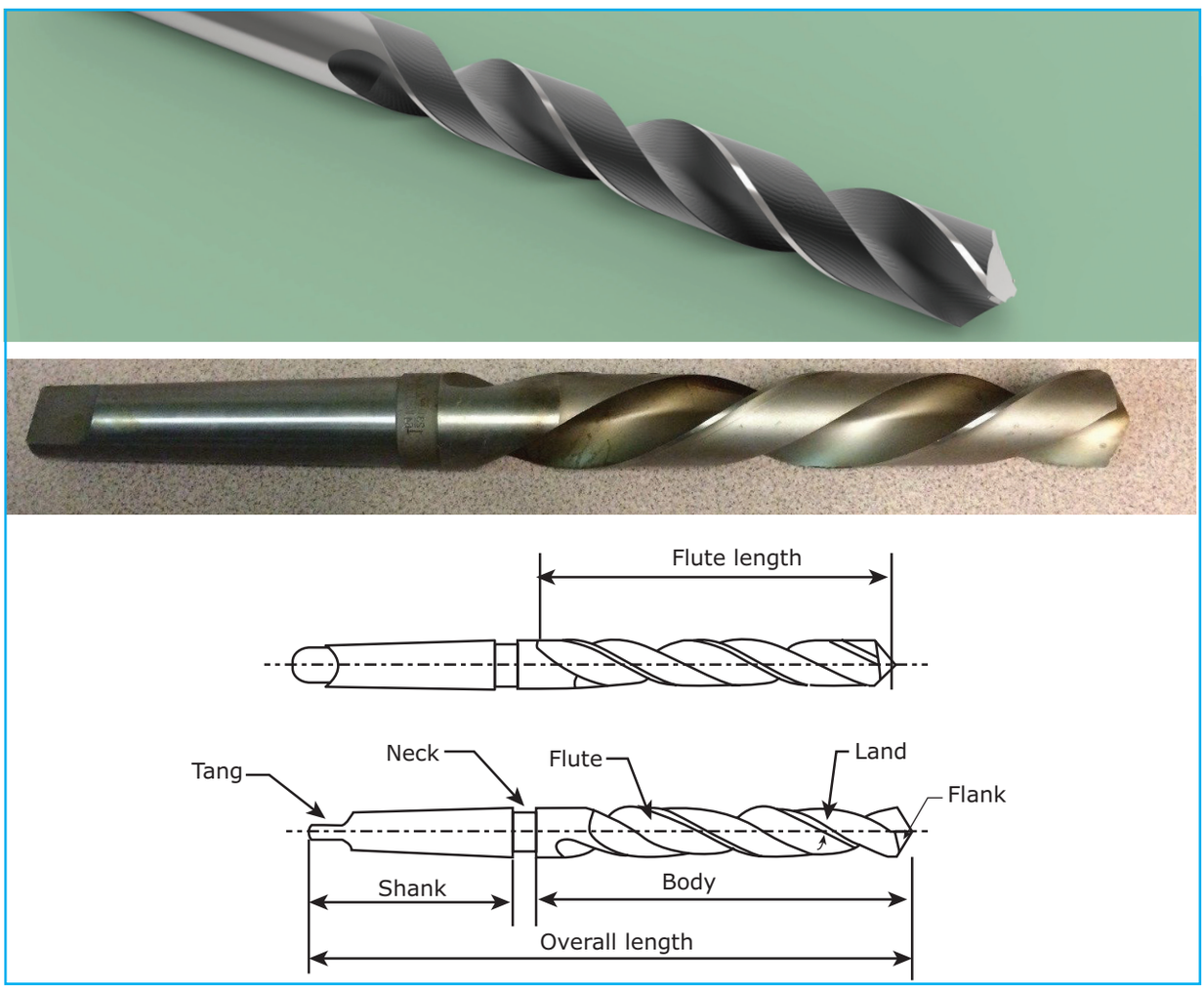

Twist Drill Nomenclature

XII BME_English version CHAPTER 02.indd 40 06-01-2023 13:13:36

Land

It is the cylindrically ground surface on the leading edges of the drill flutes adjacent to the body clearance surfaces. The alignment of the drill is maintained by the land. The hole is maintained straight and to the right size.

Flutes

The grooves in the body of the drill are known as flutes.

- Flutes form the cutting edges on the point.
- To allow the chips to escape
- To cause the chips to curl

To permit the cutting fluid to reach the cutting edges.

2.9 Tool holding Devices

Different tools are used for performing different operations. They are fitted into the drill spindle by different methods. They are

1. directly fitting in the spindle
2. a sleeve
3. a socket
4. a drill chuck
5. special attachments
   a. Tapping attachments
   b. Floating holder.

Directly fitting in the spindle

The following figure shows the drill directly fit into the spindle.

Drilling machines have their spindle bored out to a standard taper (1:20) to receive the taper shank of the tool. While fitting the tool, the shank of the drill (or) any other tool is forced into the tapered hole and the tool is gripped by friction. The tool may be rotated with the spindle by friction between the tapered surface and the spindle. But to ensure a positive drive the tang of the tool fits into a slot at the end of the taper hole.

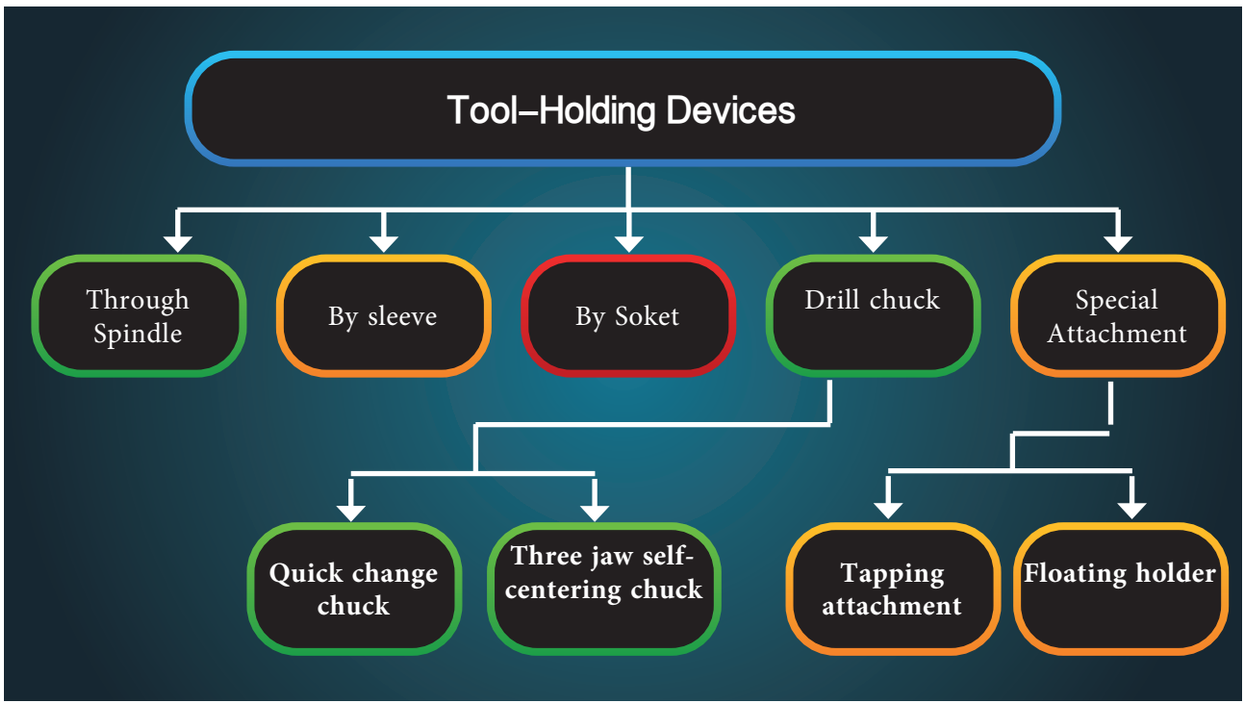

XII BME_English version CHAPTER 02.indd 41 06-01-2023 13:13:36

The tool may be removed by pressing a tapered wedge known as drift or key into the slotted hole of the spindle. The drift is made up of hard steel.

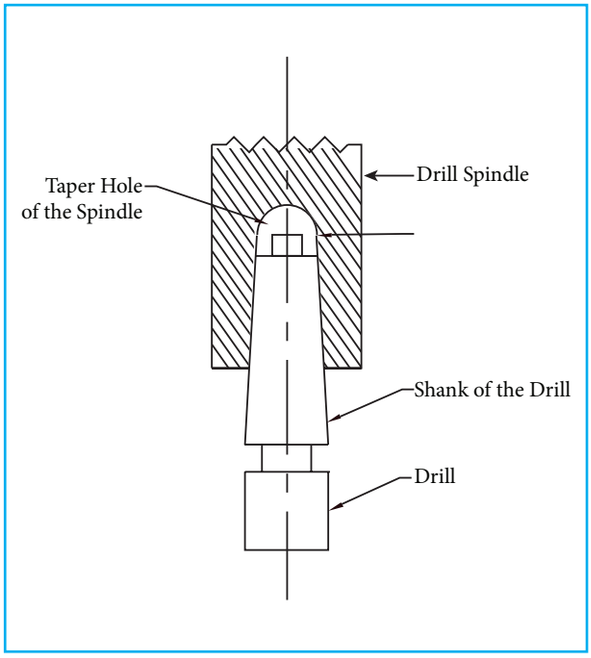

Directly fitting in the spindle

Sleeve

The drill spindle is suitable for holding only one size of tool shank. If the shank of the tool is smaller than the taper in the spindle hole a taper sleeve is used. The outside taper of the sleeve confirms to the spindle taper and the inside taper holds the shanks of the smaller size tools. The sleeve has a flattened end or tang which fits into the slot of the spindle. The tang of the tool fits into a slot provided at the end of the taper hole of the sleeve. Different sizes of tool shanks may be held by using different sizes of sleeve.

In order to remove the drill from the spindle, the drill along with the sleeve is removed with the help of a drift. The drill is then removed from the sleeve by the same method.

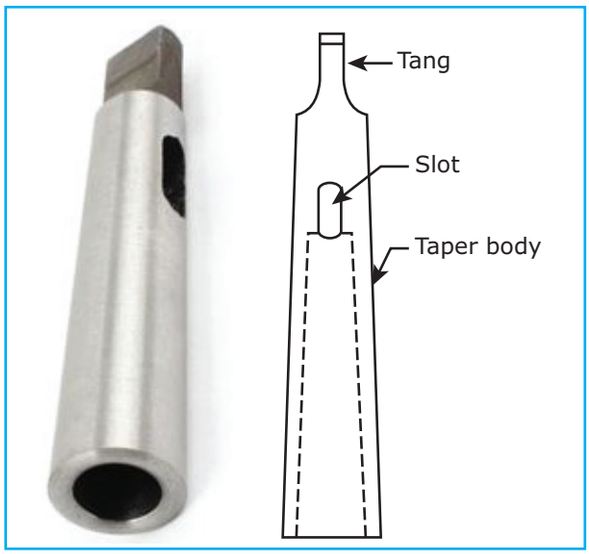

Sleeve

Socket

When the tapered tool shank is larger than the spindle taper, drill sockets are used to hold the tool. Drill sockets are much longer in size than the drill sleeves. A socket consists of a solid shanks attached to the end of a cylindrical body. The taper shank of the socket confirms to the taper of the drill spindle and fits into it. The body of the socket has a tapered hole larger than the drill spindle taper into which the taper shank of any tool may be fitted. The tang of the socket fits into slot of the spindle and the tang of the tool fits slot of the socket.

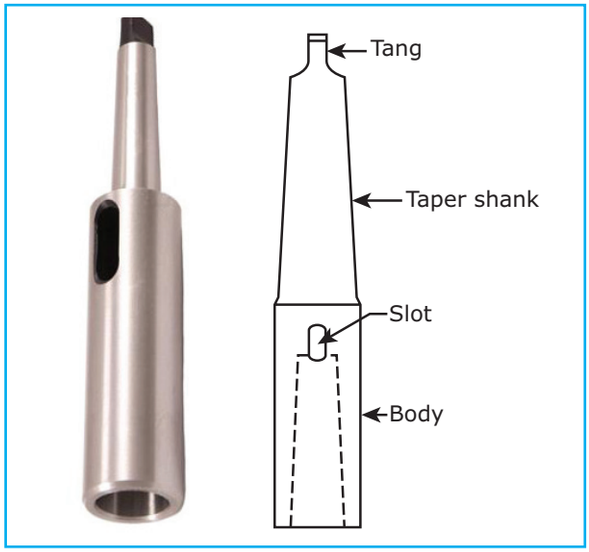

Socket

XII BME_English version CHAPTER 02.indd 42 06-01-2023 13:13:37

Drill chuck

This type of chuck is particularly adapted for holding smaller size of drills having straight shanks. The drill chuck has a taper shank at top portion of the chuck, which fits into the taper hole of the spindle. Bevel teeth are cut round the sleeve body which locates at the centre portion of the chuck. At the bottom of the chuck, there are three jaws are fitted at 120° each other. It is used to hold the drill bit. The jaws are made of spring steel.

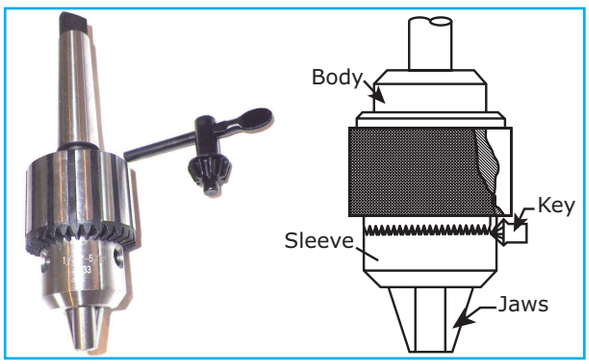

Drill Chuck

There are two types of chucks

a) Quick change chuck
b) Three jaw self-centering chuck

2.10 Drilling machine operations

Though drilling is the primary operation performed in a drilling machine, a number of similar operations are also performed on holes using different tools. The different operations that can be performed in a drilling machine are,

1. Drilling
2. Reaming
3. Boring
4. Counter-boring
5. Counter-sinking
6. Spot-facing
7. Tapping
8. Trepanning

2.10.1 Drilling

Drilling is the operation of producing a new cylindrical hole of required diameter and depth by removing metal by the rotating edge of a cutting tool called drill. Drilling is one of the simplest methods of a producing a hole.

Drilling does not produce an accurate hole in a work piece. The internal surface of the hole generated by drilling becomes rough and the hole is always slightly oversize due to vibration of the spindle and the drill. A 12 mm drill bit may produce a hole of size 12.125 mm. Before making a new hole by using on the work piece, first draw two lines at right angle to each other. Then a center punch is used to make a center on the work piece accurately. The drill point is pressed at this center point to produce the required hole.

The figure shows the drilling operation

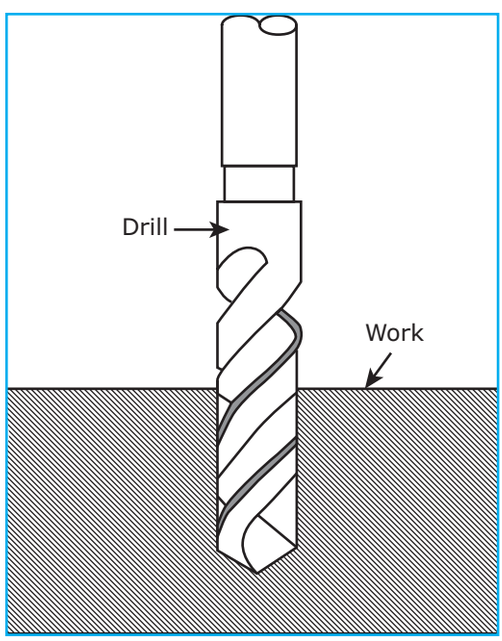

Drilling

XII BME_English version CHAPTER 02.indd 43 06-01-2023 13:13:37

2.10.2 Reaming

The size of hole made by drilling may not be accurate and the internal surface may not be smooth. Reaming is an accurate way of sizing and finishing a hole which has been previously drilled by a multi – point cutting tool known as reamer. The surface obtained by reaming will be smoother and the size accurate. The speed of the spindle is made half that of drilling. Reaming removes very small amount of metal (approximately 0.375mm). In order to finish a hole and bring it to the accurate size, the hole is drilled slightly undersize. The figure shows reaming operation.

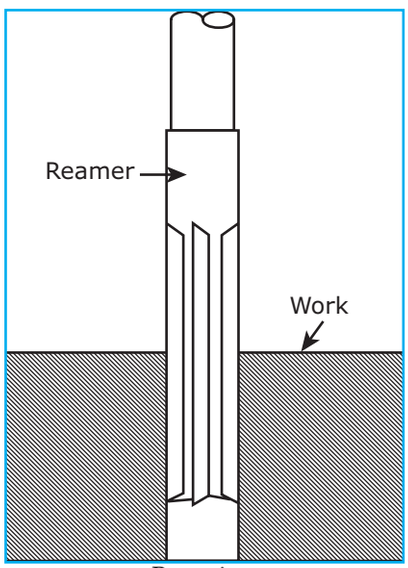

Reaming

2.10.3 Boring

Boring is the operation enlarging the diameter of the hole previously made. It is done for the following reasons.

To enlarge a hole by means of an adjustable cutting tool. This is done when a suitable sized drill is not available (or) the hole diameter is so large that is cannot be ordinarily drilled.

1. To finish a hole accurately and bring it to the required size.
2. To machine the internal surface of the hole already produced in casting.
3. To correct out of roundness of the hole.
4. To correct the location of the hole as the boring tool follows independent path with respect to the hole.

Boring tool is a tool with only one cutting edge. The tool is held in a boring bar which has a taper shank to fit into the spindle (or) a socket. For perfectly finishing a hole, the job is drilled undersize slightly. Boring operation in some precise drilling machine is performed to enlarge the holes to an accuracy of 0.00125mm. The spindle speed during the boring operation should be adjusted to be lesser than that of reaming.

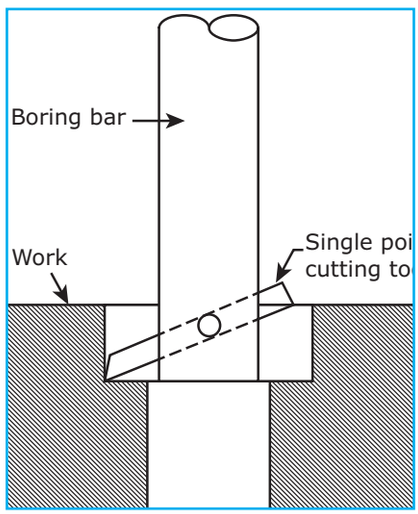

Boring

Counter boring

Counter boring is the operation of enlarging the end of the hole cylindrically. The enlarged hole forms a square shoulder with the original hole. This is necessary in some cases to accommodate the heads of bolts, studs and pins. The tool used for counter boring is known as counter bore.

The counter bores are made with cutting edges which may be straight (or)

XII BME_English version CHAPTER 02.indd 44 06-01-2023 13:13:37

spiral. The cutting speed for counter boring is at least 25% lesser than that of drilling.

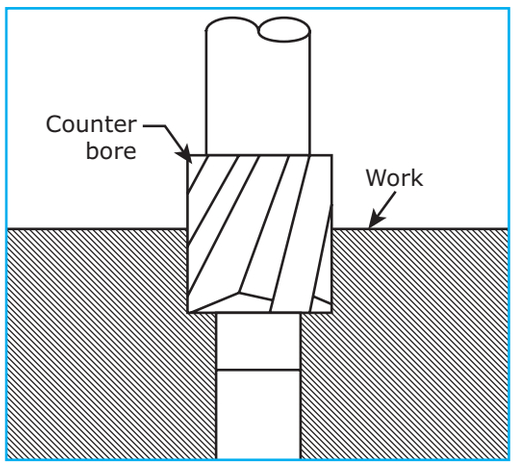

Counter Boring

Counter Sinking

Counter sinking is the operation of making a cone shaped enlargement at the end of the hole. The included angle of the conical surface may be in the range of 60º (or) 90º. It is used to provide recess for a flat headed screw or a counter sunk rivet fitted into the hole. The tool used for counter sinking is known as a counter sink. It has multiple cutting edges on its conical surface. The cutting speed for counter sinking is 25% lesser than that of drilling.

The figure illustrates counter sinking operation.

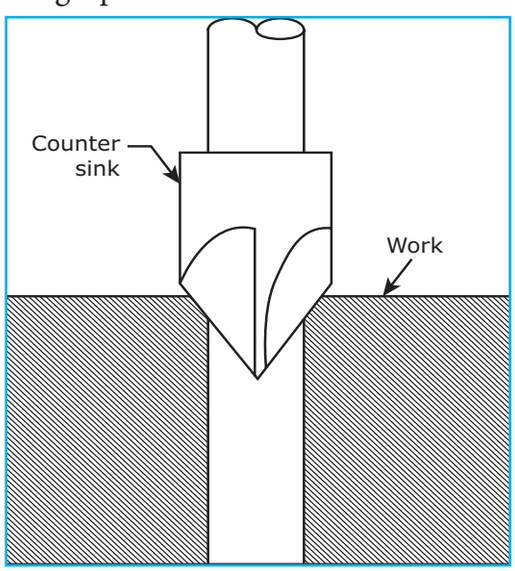

Counter sinking

2.10.4 Tapping

Tapping is the operation of cutting internal threads by means of a cutting tool called "Tap". Tapping in a drilling machine may be performed by hand (or) by power. When the tap is screwed into the hole. It removes metal and cuts internal threads which fit into external threads of the same size.

The following figure illustrates tapping operation.

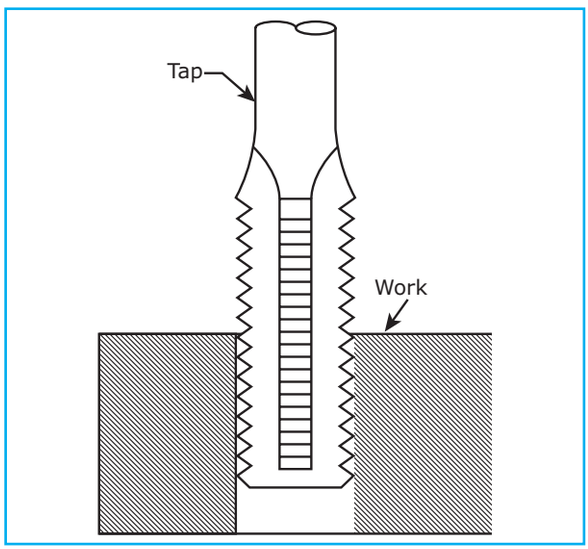

Tapping

Calculation of the Tap drill size

Tap drill size may be derived from the following formula.

Tap drill size 'D'= T-2d

Where 'T' is the outer diameter of tap to be used. And 'd' is depth of the thread.

Tap drill size can also be calculated the following formula.

D=0.8T

Example:

Calculate the tap drill size. When outside diameter of the tap is 10mm the pitch of the thread is 1.5 mm and depth is 0.61mm.

XII BME_English version CHAPTER 02.indd 45 06-01-2023 13:13:37

Out side diameter of the tap T=10 mm

Pitch of the thread p=1.5 mm

Depth of the thread d= 0.61 mm

Tap drill size $D = T - 2pd$

$= 10 - 2 \times (1.5) \times (0.61)$

$= 10 - 1.83$

$D = 8.20$ mm

2.11 Cutting Speed

Speed in general refers to the distance a point moves in a particular period of time. The cutting speed in a drilling operation refers to the peripheral speed of a point on the cutting edge of the drill. It is usually expressed in meters per minute. The cutting speed (v) may be calculated as.

Cutting speed (c.s) $V = \frac{\pi dn}{1000}$ m/min.

Where 'd' is the diameter of the drill in mm,

'n' is the speed of the spindle in rpm and

$\pi = \frac{22}{7}$ (or) 3.14.

Example:

A drill of diameter 20mm makes a hole on a steel part at a cutting speed of 25m/min.

Find out the spindle speed.

Cutting speed (c.s) $V = \frac{\pi dn}{1000}$ m/min

$25 = \pi \times 20xn/1000$

$n = 25x1000/ \pi \times 20 = 398$ rpm.

Spindle speed 'n' = 398 rpm.

2.12 Feed

The feed of a drill is the distance that it moves into the work for each revolution of the spindle. It is expressed in millimeters. The feed may also be expressed as feed per minute. The feed per minute may be defined as the axial distance moved by the drill into the work per minute.

Feed depends upon factors like the material to be drilled. The rigidity of the machine, power, depth of the hole and the type of finish required.

2.13 Depth of cut

The depth of cut in drilling is equal to one half of the drill diameter. If 'd' is the diameter of the drill. The depth of cut (t) t=d/2 mm.

ACTIVITIES

1. To make an arrangement the students to visit the workshop, polytechnic and engineering colleges, to observe the various operations performed by drilling machines.
2. To give more exercises to the students, to make holes by using drilling machine and Lathe machine in school practical Laboratory.

XII BME_English version CHAPTER 02.indd 46 06-01-2023 13:13:38

QUESTIONS

Part I

Choose the correct option

1 mark

1. The inventor of first electric drilling machine is
   a. Henry Maudslay
   b. Arthur James Arnot
   c. Eli whitney
   d. James Nasmith
2. The drilling machine used in constructional work is,
   a. Bench drilling machine
   b. Portable drilling machine
   c. Gang drilling machine
   d. Multi spindle drilling machine
3. Counter – bore is a
   a. Multi – point cutting tool
   b. Single point cutting tool
   c. Parting tool
   d. Saw teeth cutting tool
4. The size of the hole can be drilled in radial drilling machine is
   a. up to 10mm
   b. up to 12 mm
   c. up to 50mm
   d. up to 70 mm
5. Twist drills are made of
   a. Low carbon steel
   b. High Speed steel or High carbon steel
   c. Brass
   d. Ceramics
6. The angle between three jaws of a drill chuck is
   a. 118˚
   b) 120 ˚
   c) 135 ˚
   d)59 ˚
6. The formula to calculate tap drill size is
   a. D=T + 2d
   b) D=T × 2d
   c) D=T - 2d
   d) D=T ÷ 2d
7. The drift is made up of
   a. Carbon steel
   b) Tool steel
   c) Hard steel
   d) High speed steel
8. Name of the groove in drill is
   a. V-type groove
   b. U-type groove
   c. Flute
   d. Straight type groove

Part II

Answer the following questions in one or two sentences.

3 Marks

9. Define – “Drilling”
10. Mention any four types of drilling machine
11. What are the special features of radial drilling machine

XII BME_English version CHAPTER 02.indd 47 06-01-2023 13:13:38

12. What are the different types of drills?
13. What are the uses of "Flute" in a drill?
14. Mention any four types of tool – holding devices in drilling machine.
15. State any two differences between the process of reaming and boring.
16. In which situation boring is needed?
17. Define "Cutting speed" of a drilling machine.

Part III

Answer the following questions in about a page

5 Marks

18. Draw and explain a bench drilling machine.
19. How is the size of a drilling machine specified?
20. Explain any two types of drill holding devices.

Part IV

Answer the following questions in detail. **10 Marks**

21. Explain the construction of a radial drilling machine.
22. Explain any two work – holding devices used in a drilling machine.
23. Explain twist drill parts with neat sketch.
24. Explain any two operations performed in a drilling machine.

XII BME_English version CHAPTER 02.indd 48 06-01-2023 13:13:38

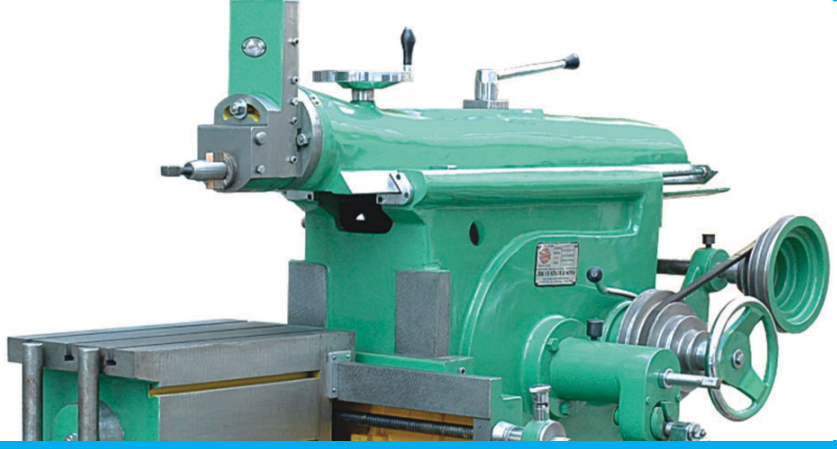

CHAPTER 03

SHAPING MACHINE

Learning Objective

To understand the students about important parts of shaping machine, application of machine mechanism, various types of operations performed in the machine

CONTENTS

3.1. Introduction
3.2. Process of machining
3.3. Main parts of the shaping machine
3.4. Types of shaping machine
3.5. Quick return mechanism
3.6. The size of a shaper
3.7. Changing the stroke length
3.8. Method of table movement
3.9. Swivel tool head
3.10. Work-Holding devices
3.11. Types of shaper tools
3.12. Setting of shaper table, vise and Tool head
3.13. Types of shaping operation
3.14. Special operations
3.15. Cutting speed, depth of cut and feed

3.1 Introduction

Shaping is a process of machining a flat surface which may be horizontal, vertical, inclined, concave or convex using a reciprocating single point tool. A shaping machine is a reciprocating type of machine tool. James Nasmith, an Englishman designed a shaping machine to produce flat surfaces in the year 1836.

3.2 Process of Machining

The work is held firmly on the table and the ram is allowed to reciprocate over it. A single point cutting tool is attached to the ram. When the ram moves horizontally in the forward direction, the tool removes metal from the work. During the return stroke, metal is not removed. The ram moves at a slow speed during the forward

Shaping machine was designed by James Nasmith in the year 1936. It is used to produce flat surfaces like horizontal, vertical, inclined, concave and convex.



James Nasmith

stroke. But during the forward and return motion the stroke length remain same, the time taken by the return stroke is less as than the forward stroke. It is done by 'Quick return mechanism'.

In a shaping machine, a flat horizontal surface is machined by moving the work mounted on the table in a crosswise direction to the tool movement. When vertical surfaces are machined, the feed is given to the tool.

When inclined surface is machined, the vertical slide in the tool head is swiveled to the required angle and the feed is given to the tool by rotating the down feed hand wheel.

The method of machining in a shaper is illustrated in Figure.

3.3 Main parts of Shaping Machine

Base

The base is hollow and is made of cast iron. It provides the necessary support for all the other parts of the machine. It is rigidly bolted in the floor of the workshop.

Column

It is a box like casting mounted vertically on top of the base. Two accurate guideways are machined on the top of the column. The ram reciprocates on these guideways. The front face of the column is provided with two vertical guideways. They act as guideways for the crossrail. Crossrail moves vertically along

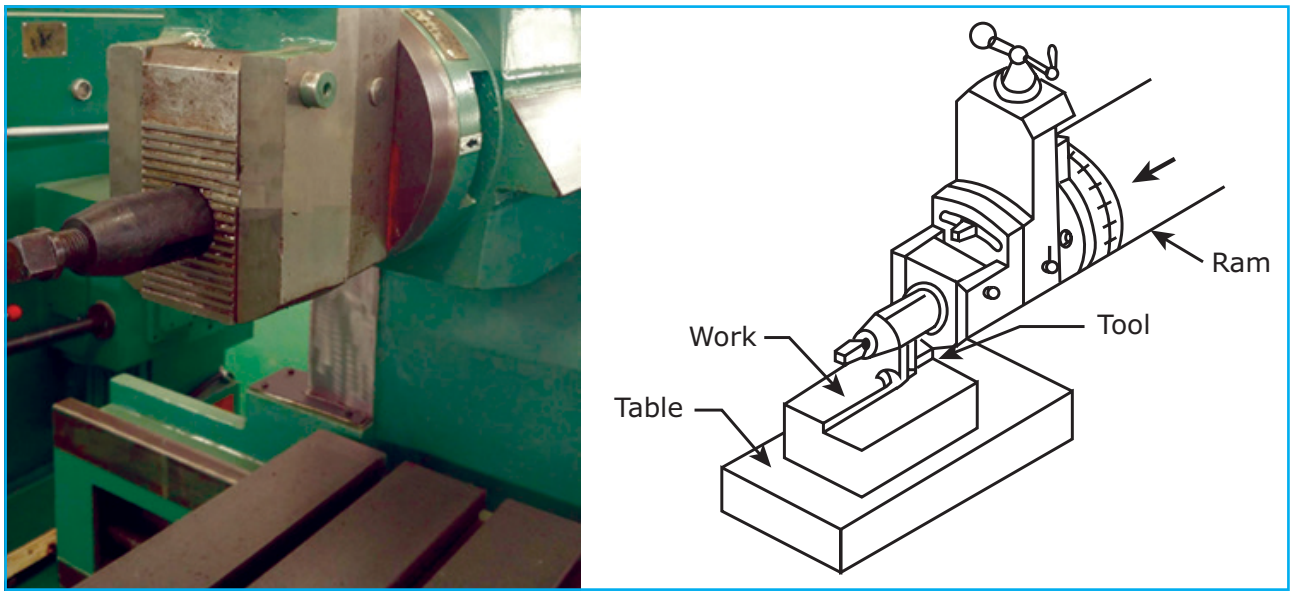

Machining process

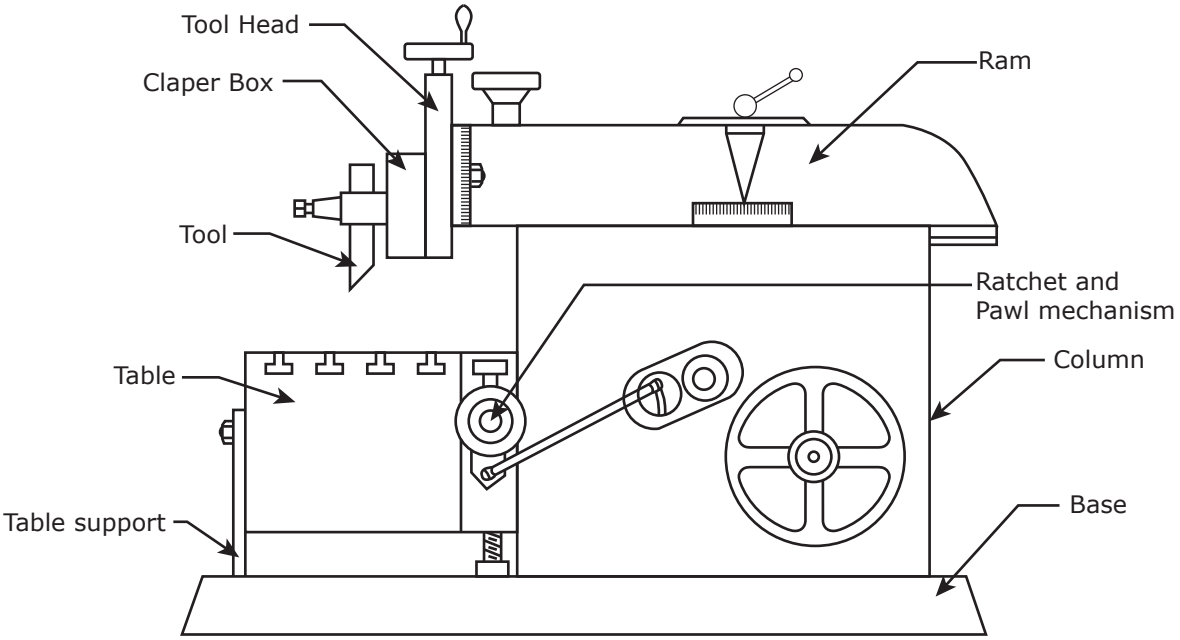
Tool Head
Claper Box
Tool
Table
Table support
Ram
Ratchet and
Pawl mechanism
Column
Base



these guideways. The column encloses the ram reciprocating mechanism and the mechanism used for stroke length adjustment.

Cross rail

It is mounted on the front vertical guideways of the column. The table may be raised or lowered by adjusting the cross rail vertically. A horizontal cross feed screw is fitted within the crossrail.

Saddle

The saddle is mounted on the cross rail. It holds the table rigidity on its top. The saddle can be moved in crosswise direction by rotate the cross-feed screw by hand or power.

Table

It is an important part used for holding the work firmly on it. It is mounted on the saddle which is located above the crossrail. The top and sides of the table are accurately machined and have T-slots. Workpieces are held on the table with the help of shaper vise, clamps and straps.

Ram

Ram carries the tool head on its front end. It reciprocates on the accurately machined guideways on the top of the column. It is connected to the reciprocating mechanism placed inside the column. The position of ram reciprocate motion may be adjusted according to the location of the work on the table.

Tool head

The tool head is fitted on the face of the ram and hold the tool rigidly. It provides vertical and angular feed movement of the tool. The swivel tool head can be positioned at any required angle based on the job. The vertical slide can be moved vertically or at any desired angle based on the inclined surfaces.

3.4 Types of Shaping Machine

Classification of the shaping machines as follows:

1. According to the type of driving mechanism
   a. Crank type
   b. Hydraulic type
   c. Geared type
2. According to the design of the table
   a. Plain shaper
   b. Standard shaper
   c. Universal shaper
   d. Heavy duty shaper
3. According to the position and travel of ram
   a. Horizontal shaper
   b. Vertical shaper
4. According to the type of cutting
   a. Push cut shaper
   b. Draw cut shaper

Crank type shaper

Crank and slotted link mechanism of a crank type shaper converts the rotation of an electric motor into reciprocating movement of the ram. Though the lengths of both the forward and return strokes are equal, the ram travels at a faster speed during return stroke. This quick return is incorporated in almost all types of shaper.

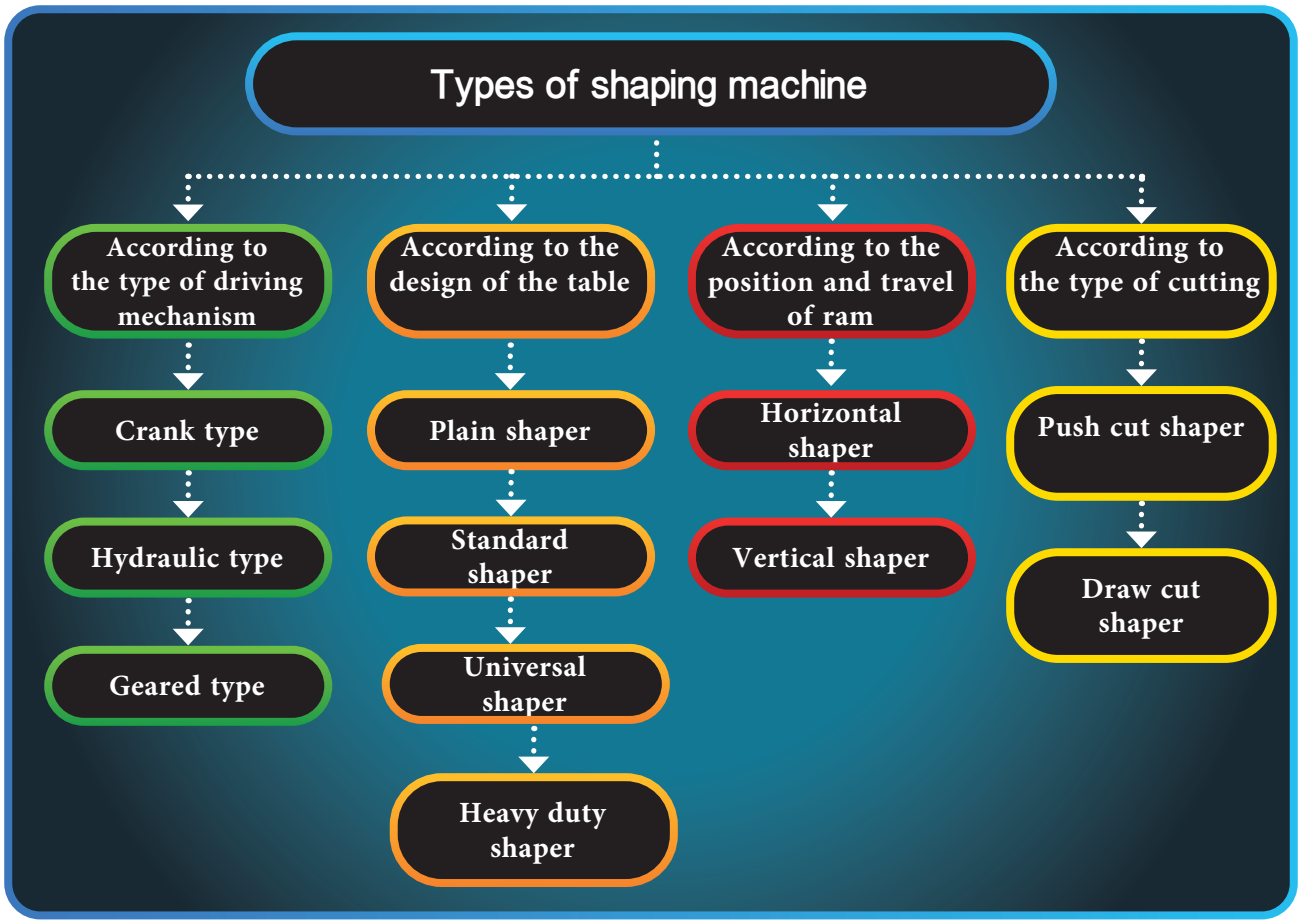

Hydraulic shaper

The ram of a hydraulic shaper is connected to a piston. Oil at high pressure is pumped to the cylinder of the hydraulic system. As the oil pushes the piston, the ram reciprocates. Hydraulic shapers are high power machines and are used for heavy duty work.

Universal shaper

The universal shaper has a special type of table which can be swiveled and positioned at any angle about a horizontal axis. Apart from the cross and vertical travel, the table of a universal shaper can be swiveled to any angle to machine inclined surfaces. In the process, the position of the work in the table need not be changed. These machines are utilized in precision workshops.

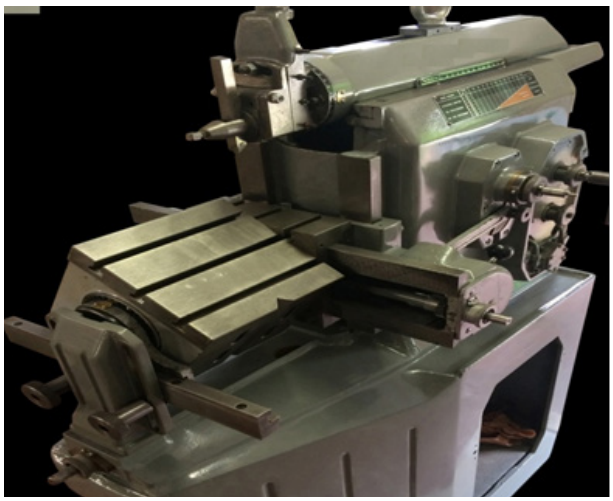

Universal Shaper

3.5 Quick return mechanism

The ram moves at a comparatively slower speed during the forward cutting stroke. During the return stroke, the mechanism is so designed to make the tool move at a faster rate to reduce the idle return

time. This mechanism is known as quick return mechanism.

At the ram moves at a faster rate during return stroke, the time taken becomes less. The total machining time decreases and the rate of production increases. The following mechanisms are used for quick return of the ram.

1. Crank and slotted link mechanism
2. Hydraulic mechanism
3. Whitworth mechanism

Crank and slotted link mechanism

An electrical motor runs the driving pinion(S) at a uniform speed. This pinion makes the bull gear (M) to rotate at a uniform speed. Bull gear is a large gear fitted inside the column. The point 'O' is the centre of the bull gear. A slotted link having a long slot along its length is pivoted about the point 'K'. A sliding block 'N' is fitted inside the slot and slides along the slot, which is in the slotted link. 'P' is the crank pin and 'OP' can be considered as a crank.

Figure shows the crank & slotted link mechanism.

When the bull gear rotates, the sliding block also rotates in the crank pin circle. This arrangement provides a rocking movement to the rocker arm. As the top of the slotted link is connected to the ram, the ram reciprocates horizontally. So, bull gear rotation is converted into the reciprocating movement of the ram.

Quick return mechanism

As shown in the diagram, 'KA' indicates the starting point of the forward cutting stroke and 'KB' the end of the cutting stroke. The rotation of the crank 'OP' in clockwise direction through the angle CRC_1 refers to the forward cutting stroke. The rotation of the crank in the same direction through the angle C_1LC refers to the return stroke. As the angle C_1LC is smaller than the angle CRC_1, the time taken for the return stroke is less than the forward stroke. So, it is evident that the speed at which the ram travels during return stroke is more.

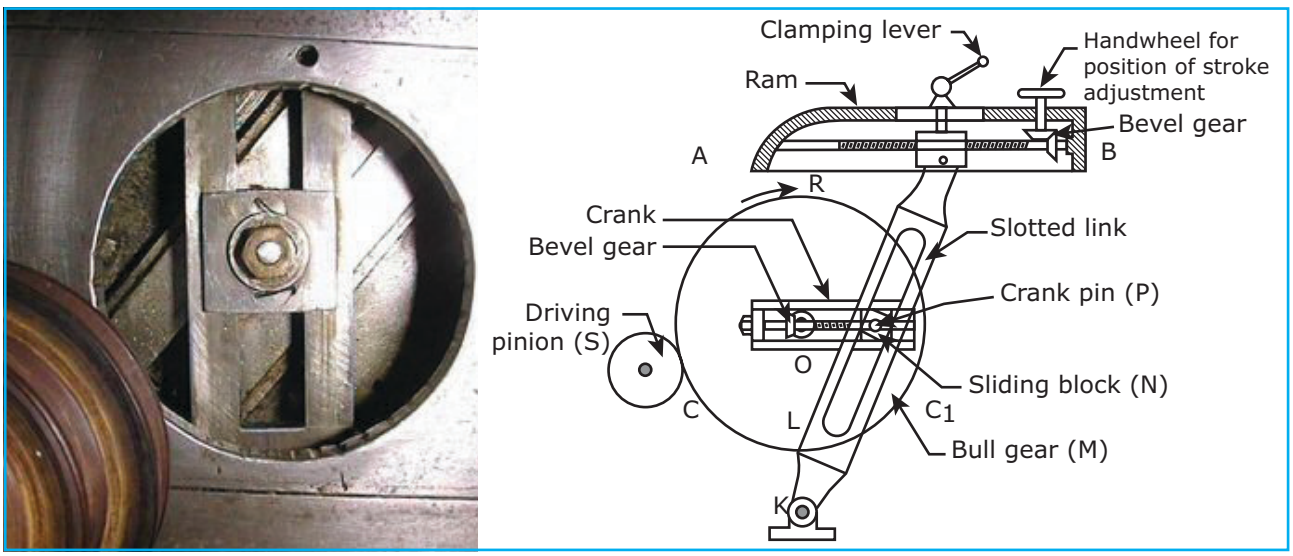

Crank and Slotted link Mechanism

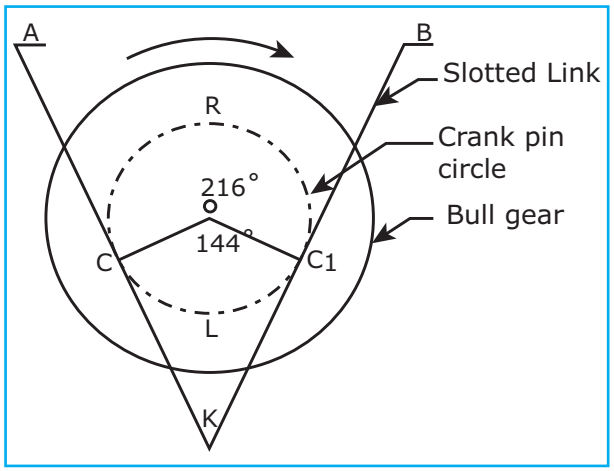

Quick Return Mechanism

$$\frac{\text{Time taken for forward cutting stroke}}{\text{Time taken for the idle return stroke}} = \frac{\text{angle } CRC_1}{\text{angle } C_1LC}$$

$= 216^0 / 144^0$

$= 3 / 2,$

In some machines this ratio can be set as 7/5.

The stroke length of a ram is the distance between the ram moves forward or backward. It depends upon the distance between the centre of the bull gear and the centre of the sliding block. It is adjusted according to the length of the work.

3.6 The size of a shaper

The size of a shaper is determined by the maximum length of stroke. Shapers with maximum stroke length of 175 mm to 900 mm are available. Machines with maximum stroke length of 300 mm, 450 mm and 600 mm are widely used.

The specifications of the machine :

1. The type of drive
   a. Individual motor
   b. Belt driven
2. The method of obtaining different speeds
   a. Gear box
   b. Step cone pulley
3. Horse power of the motor
4. Cutting to return stroke ratio
5. Number and range of speed arrangement
6. The type of the table.

3.7 Changing the stroke length

The stroke length is calculated to be nearly 30 mm longer than the work. The position of stroke is adjusted that the tool starts to move from a distance of 25 mm before the beginning of the cut and continues to move 5 mm after the end of the cut. For example as shown in Figure, the length of the work is 100 mm. The stroke length of the ram is calculated to be 130 mm. (25+100+5). Fig illustrates the calculation of stroke length.

The crank pin fastened to the sliding block can be adjusted by a lever placed outside the column. Through the bevel gears placed at the centre of the bull gear, the radial slide lead screw can be rotated. This rotation of leadscrew changes the position of the sliding block to move towards or away from the bull gear centre. The stroke length of the ram is adjusted by placing the sliding block at a required position from the centre of the bull gear.

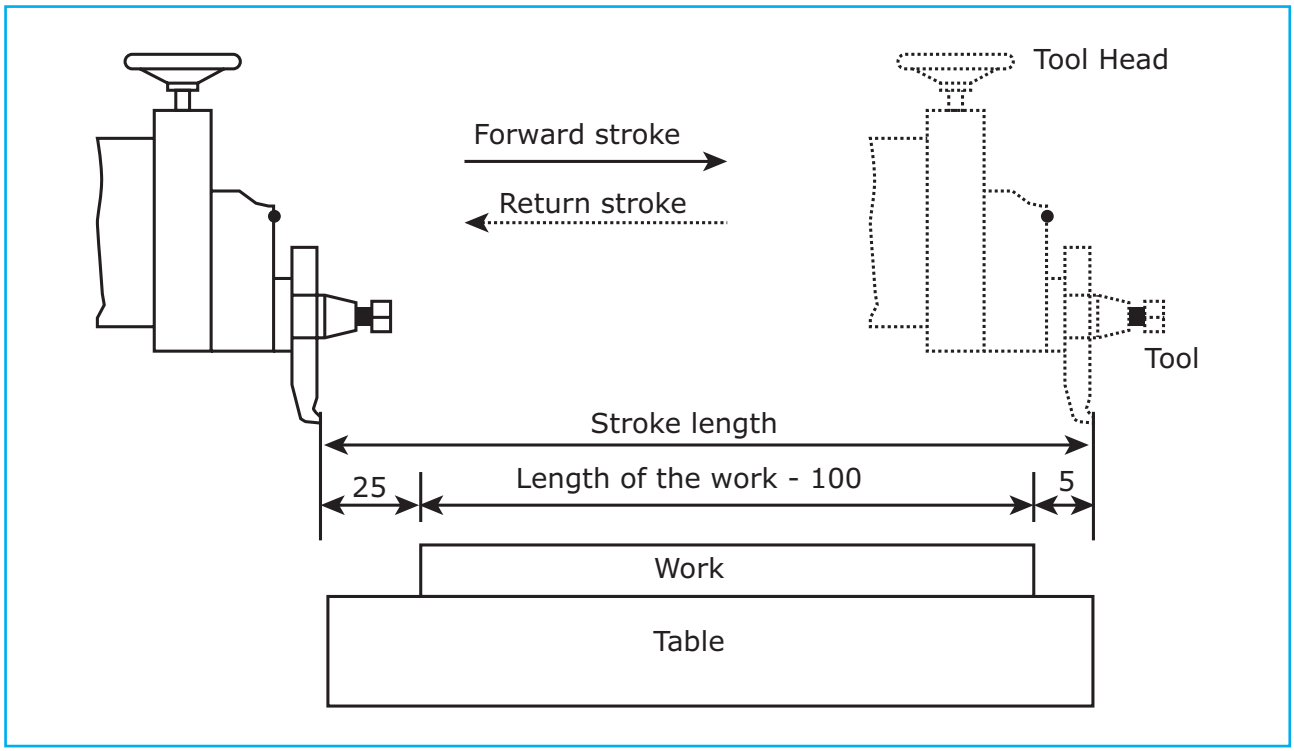

Ram Position

Note: The strokelength of the ram and its position should not be adjusted when the machine is in operation. The machine should be stopped before these adjustments are made.

3.8 Method of table Movement

1. The table moves in a cross direction when the cross-feed screw is rotated.
2. A crank handle is provided to rotate the cross-feed screw manually.
3. When the cross-feed screw is rotated in clockwise direction, the table will move towards left.
4. When the elevating screw is rotated, the table slides up and down on the face of the column.
5. The handles are used for cross-feed screw rotation and elevating screw rotation and they are placed side by side. It is not possible to operate both of them at the same time.
6. The work mounted on the table is provided with required feed only during the end of the return stroke.

3.9 Swivel tool head

The tool head of a shaper holds the cutting tool rigidly. It is fitted on the face of the ram. The vertical slide of the tool head can be moved vertically or at a particular angle to provide vertical and angular feed movement to the tool. It allows the tool to have an automatic relief during the return stroke of the ram.

The tool head has a swivel base attached to the circular seat on the ram. The swivel base has angular graduations marked on it. As the vertical slide is mounted on the swivel base of the toolhead, it may be set and moved at any desired angle to machine angular surfaces like 'V' grooves and dove tail grooves.

The down feed screw handle is rotated to move the vertical slide up and down. A graduated dial is placed on the top of down feed screw to control the amount of depth of cut or feed accurately.

Apron consisting of clapper box, clapper box and tool post is clamped on the vertical slide by a screw. By releasing the clamping screw, the apron can be swiveled either towards left or towards right with respect to the vertical slide. The clapper box has two vertical walls within which the clapper block is housed. It is connected to the clapper box with the help of a hinge pin. This arrangement provides relief to the tool while machining vertical or angular surfaces. The tool post is mounted upon the clapper block. The tool post is provided with a slot to accommodate the tool and a screw to hold the tool rigidly on the tool post.

The clapper block fits securely inside the clapper box to provide a rigid tool support during forward stroke. On the return stroke, a slight frictional drag of the tool on the work lifts the block out of the clapper box and prevents the tool cutting edge from dragging on the work surface. Fig. illustrates the swivel tool head of a shaper.

3.10 Work Holding Devices

Workpieces can be hold and supported on the shaper table directly or by having some special devices. Depending on the size and shape of the work, it may be

supported on the table by any one of the following methods.

1. Shaper vise
2. Clamps, stop pins and Toe dogs
3. T-bolts and step blocks
4. Angle Plate
5. V-Block
6. Special fixtures

Vise

Vise is the most common and simple work holding device used in a shaper. Different types of vises are used in a shaping machine according to the need and they are: 1. Plain Vise, 2. Swivel Vise, 3. Universal Vise

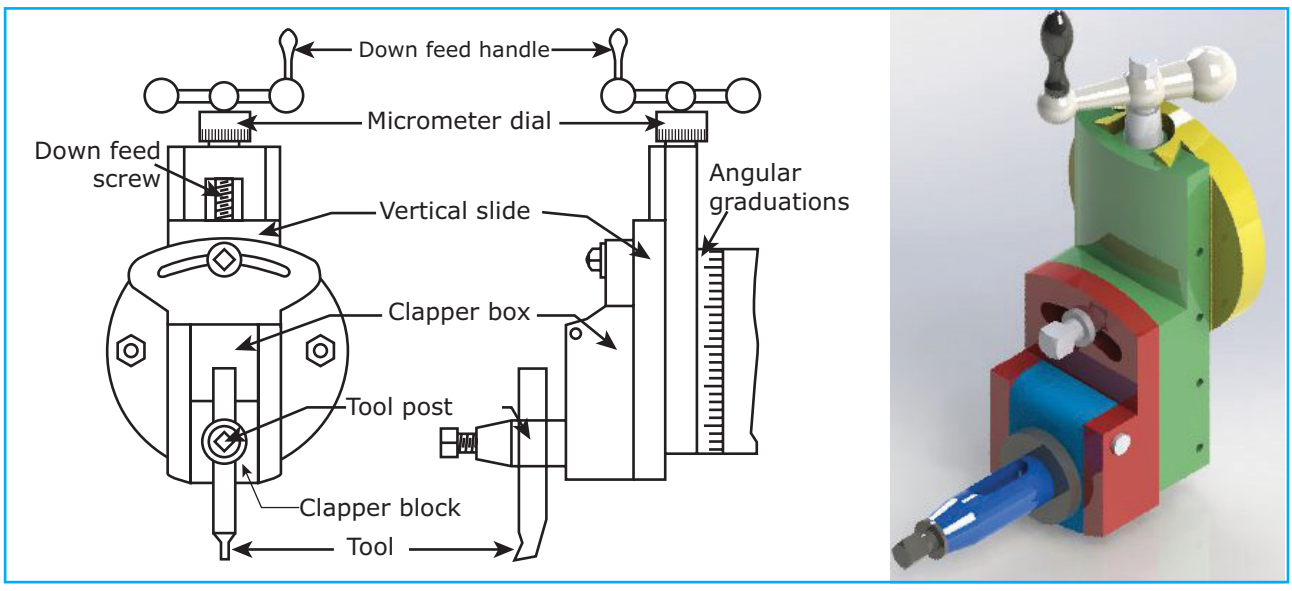

Swivel Tool Head

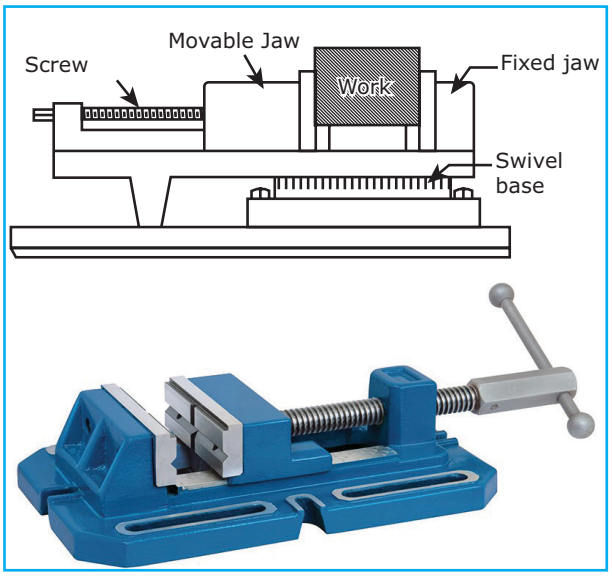

Vise

Clamps, stop pins and Toe dogs

T-bolts are fitted into the T-slots of the table. The work is placed on the table. The work is supported by a rectangular strip at one end and by a stop pin at the other side. The screw is tightened to secure the work properly on the machine table. The use of stop pin is shown in Figure.

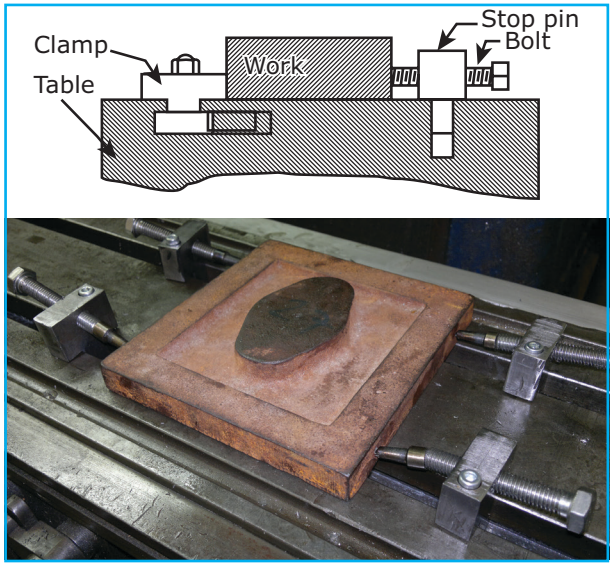

Clamp and Stop pin

T-bolts and step blocks

The step blocks are used in combination with T-bolts and clamps to hold the work directly on the machine table. The t-bolts are fitted in the T- slots of the machine table. One side of the clamp holds the work and the other side rests on a step of the step block. The different steps of the block are useful in leveling the clamp when holding works of different heights. A nut on the top of the clamp holds the work rigidly.

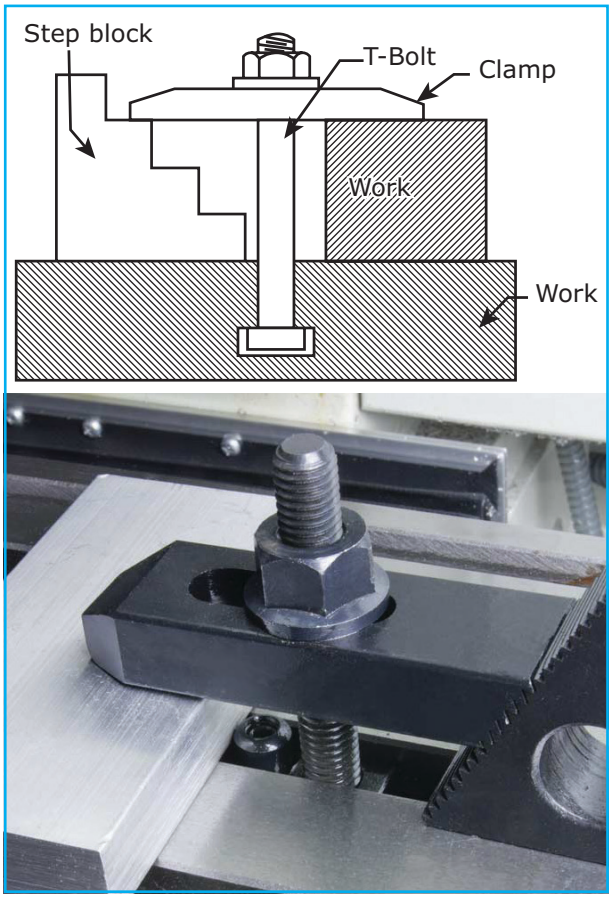

T-bolt and clamp

Angle Plate

Angle plate resembles the English alphabet 'L'. It is accurately machined to have two sides at right angles. Slots are provided on both sides. One of the sides is bolted to the machine table and the workpiece are held on the other side. The use of an angle plate is shown in Figure.

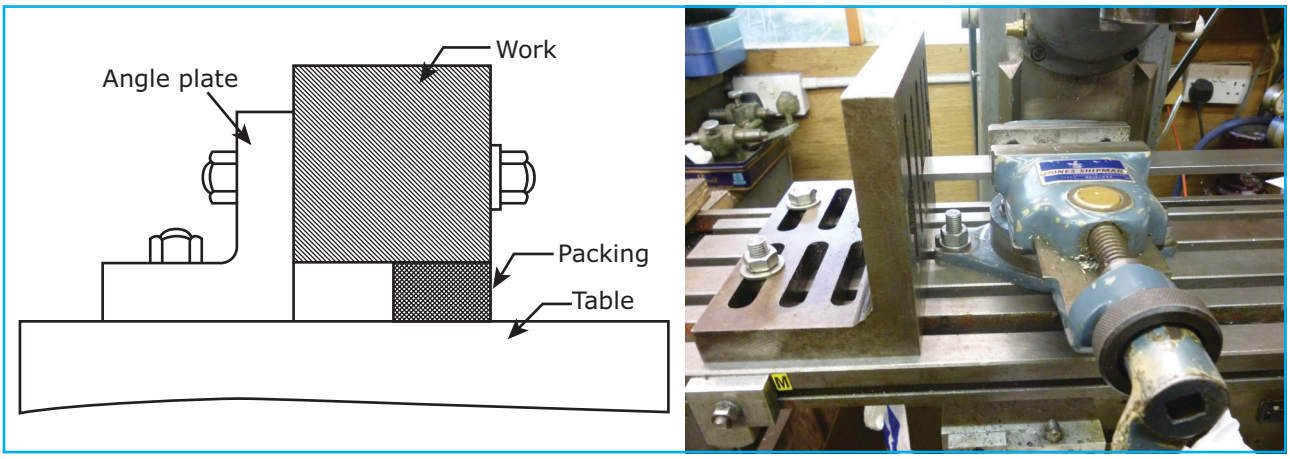

Angle Plate

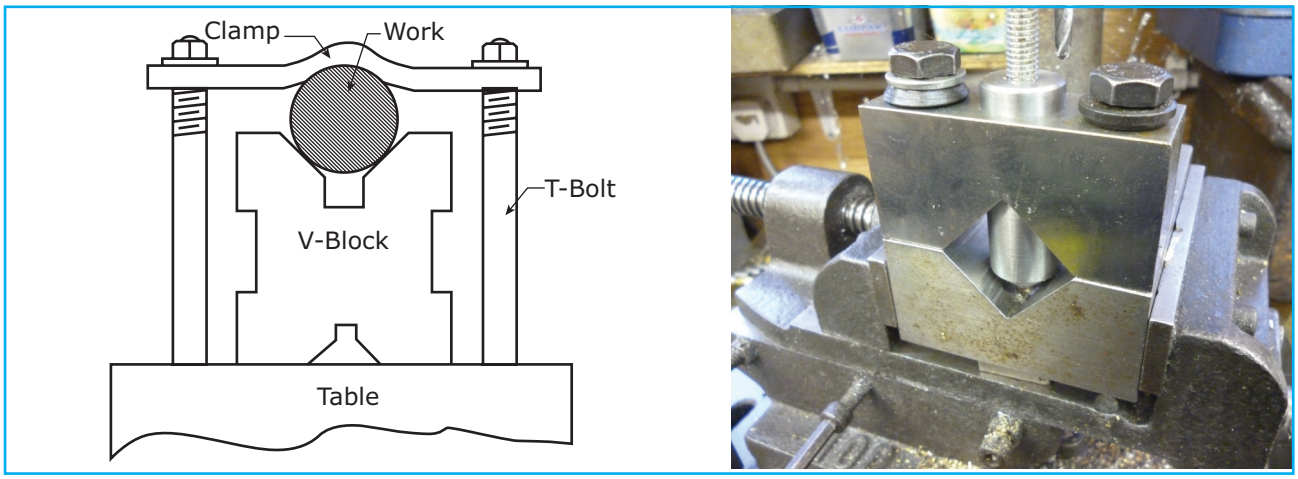

V – Block

V-block

V-block is a metal block having a 'v' shaped groove on it. It is used for holding cylindrical workpieces. Operations like keyway cutting, slot cutting and machining flat surfaces can be performed on the cylindrical workpieces held on a 'V' block. The use of a 'V' block is illustrated in Figure.

Special fixtures

When internal keyways are to be machined on the holes, the work is held with a special fixture. The fixture has a V-block attached to it and the cylindrical work is mounted on it.

3.11 Types of shaper cutting tools

According to the type of operation, various tools are used in a shaper. They are

Right hand (R.H) tool

This is a tool used for machining by moving the job from right to the left.

Left hand (L.H) tool

This is a tool used for machining by moving the job from left to right.

According to the material of the cutting tool used in a shaping machine should have more hardness and temper when compared to the material of the

workpiece. So, the shaper tools are made of the following materials. They are

1. High Carbon Steel
2. High Speed Steel
3. Carbide tipped tool
4. Stellite tool

Rough machining tool

When it is required to remove a good amount of material from the workpiece. The cutting edge will be very thick, sharp and strong to withstand the cutting pressure and to dissipate the heat generated at the cutting point. The surface obtained will be very rough.

Finishing tool

After the rough machining is performed, the finishing tool is used to obtain a very high quality of surface finish. The cutting edge will be either flat or slightly convex. Different types of shaper tools are shown in Figure.

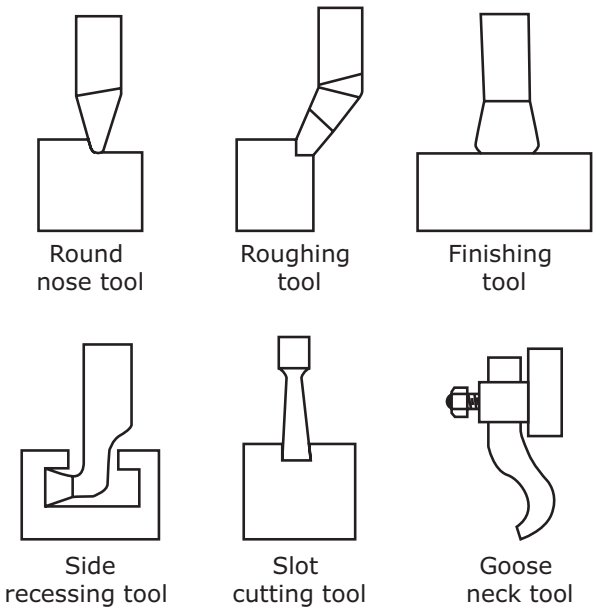

Types of shaper tools

Goose neck tool

This is a special type of tool used for finishing operation. Very good surface finish will be obtained. The cutting edge of goose neck tool has a springy action. The tip of the cutting edge lies in the same line with the rear side of the shank.

Slot cutting tool

Wide rectangular or square grooves are known as slots. Rough machining of the slot is carried out using round nose tool. After that, a slot cutting tool is used for finishing work.

T-slot cutting tool

The central rectangular (or square) slot is first machined using rough machining tool and then by using parting tool (or slot cutting tool). After that, a T-slot cutting tool is used to machine underneath the rectangular groove.

Form tool

Form tools are made to suit some specific requirements for machining V shaped grooves or similar special shaped grooves in concave or convex form.

3.12 Setting of shaper table, vise and tool head

The machining accuracy will not be perfect if the machine table and toolhead are not set properly. When the sides are perpendicular, it is referred as squareness. Parallelism means the two sides are absolutely parallel to each other. Alignment is an arrangement in which the relative positions of the table, the jaws of the vise, the toolhead and the ram are perfect. The above setting of the table, work and the tool are done with the help of test bars and feeler gauges.

3.13 Types of shaping operations

Different types of operations are performed in a shaping machine. They are broadly classified as

1. Regular operations
2. Special operations

General operations

Machining horizontal surfaces

A shaper is mostly used to machine a flat surface on a workpiece. Horizontal surfaces are machined by moving the work mounted on the machine table at a cross direction with respect to the ram movement. The clapper box can be set vertical or slightly inclined towards the uncut surface. This arrangement enables the tool to lift automatically during the return stroke. The tool will not drag on the machined surface.

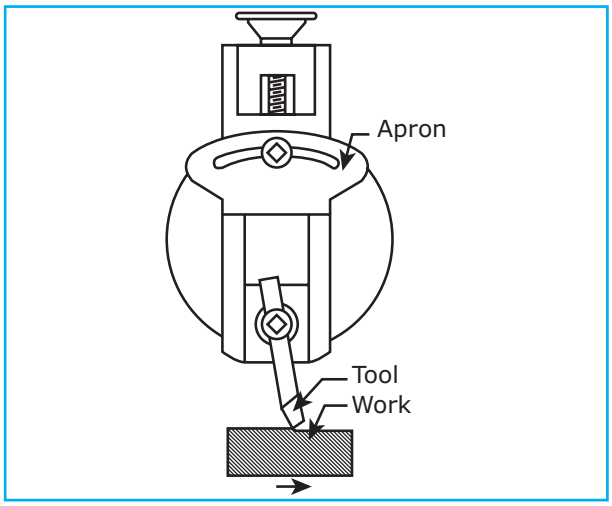

Machining Horizontal Surfaces

Machining vertical surfaces

A vertical cut is made while machining the end of a workpiece, squaring up a block or machining a shoulder.

The feed is given to the tool by rotating the down feed screw of the vertical slide. The table is not moved vertically for this purpose. The apron is

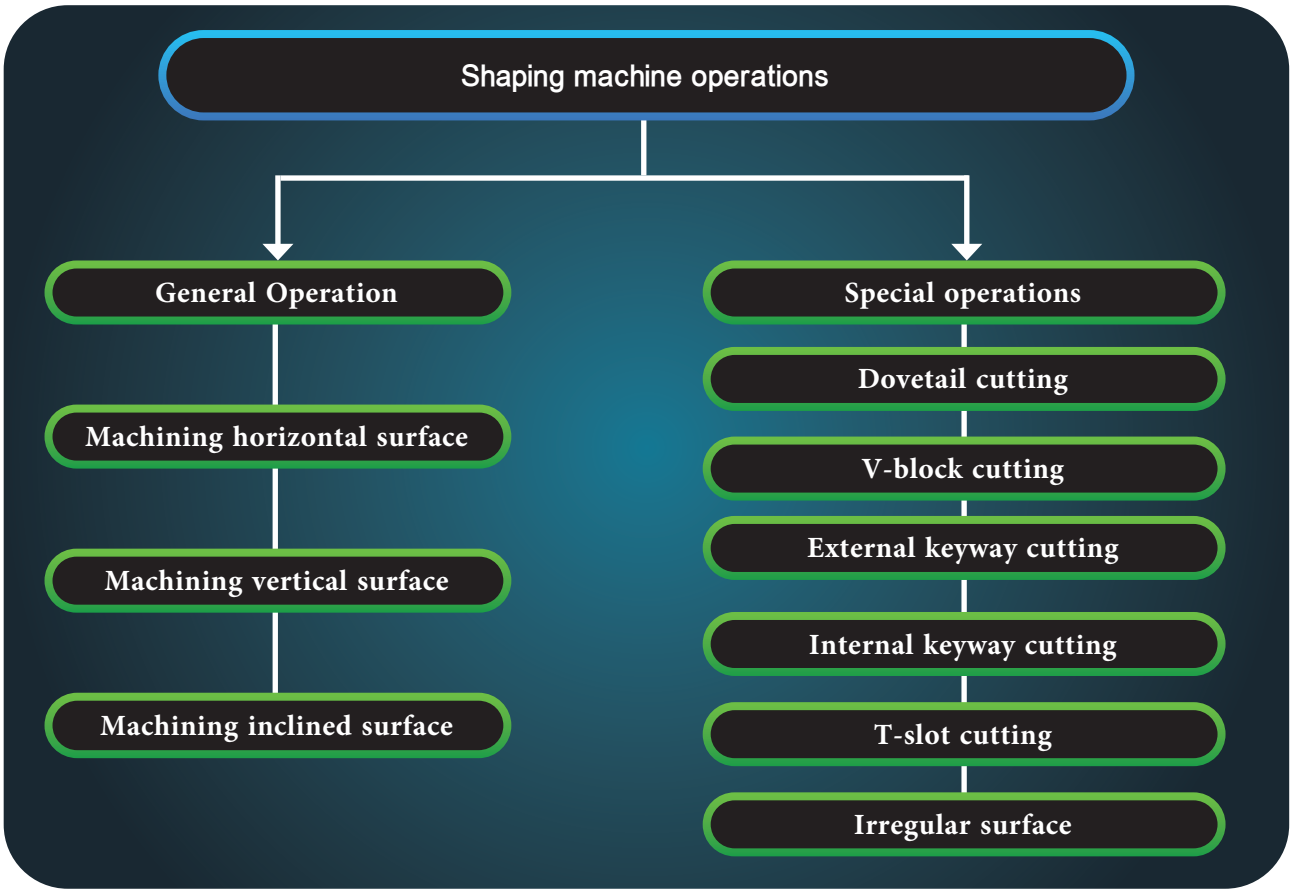

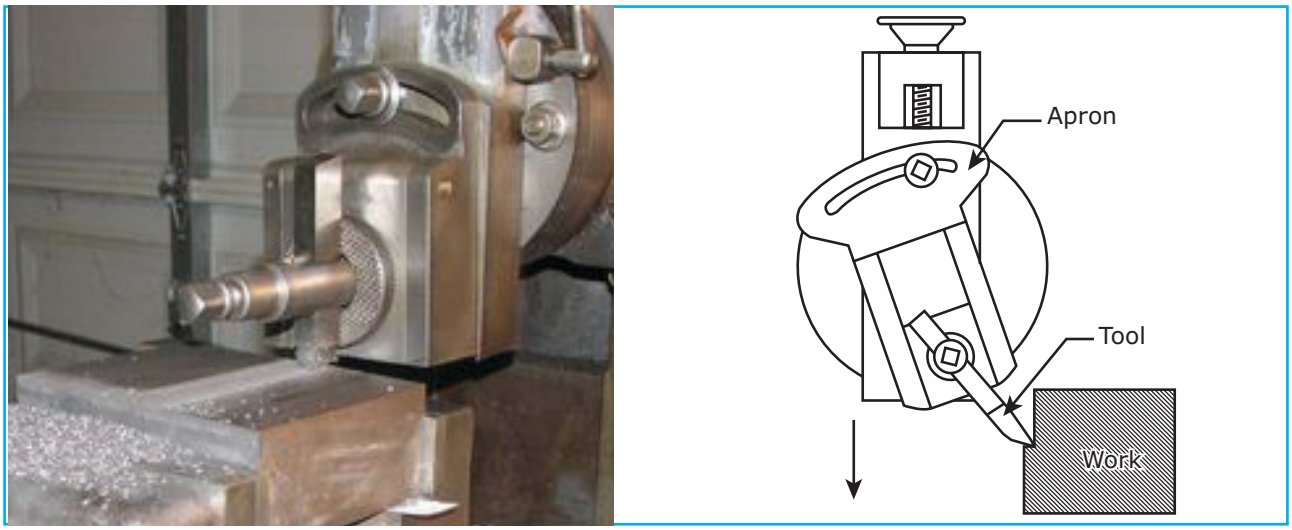

Machining vertical surfaces

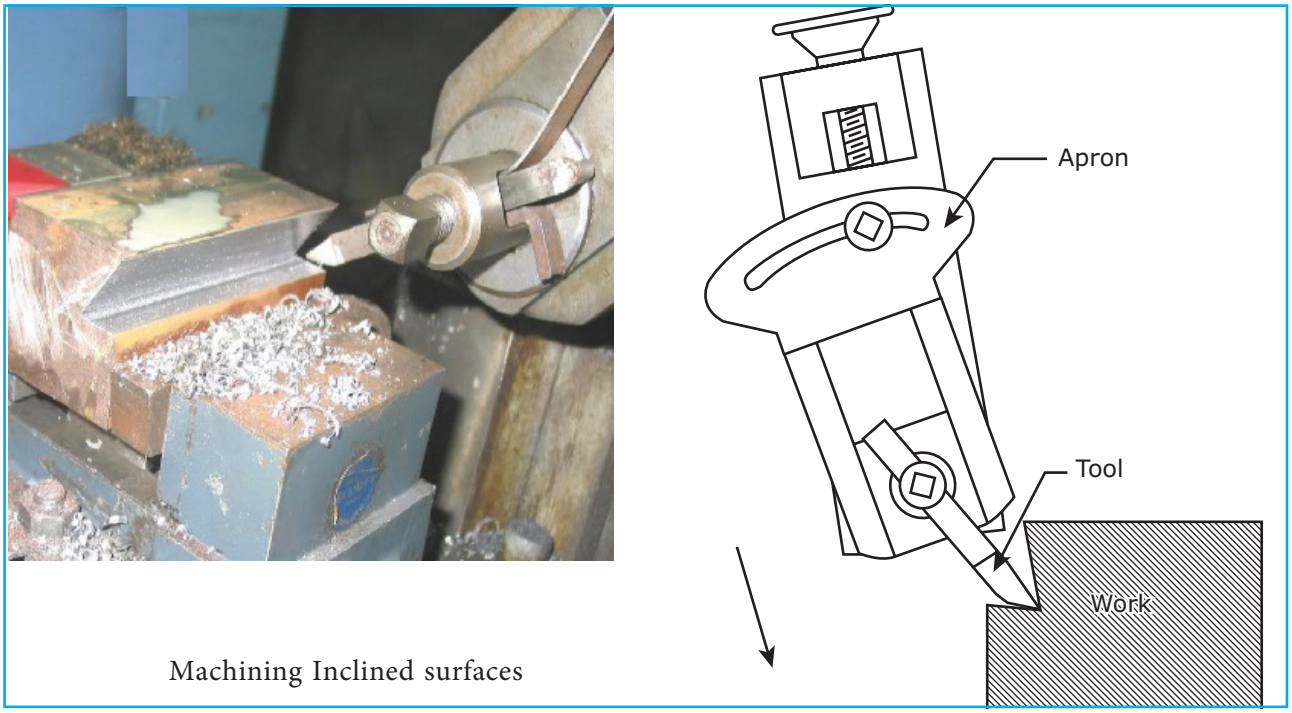

Machining Inclined surfaces

swiveled away from the vertical surface being machined as shown in the diagram.

Machining Inclined surfaces

If the surface to be machined is neither horizontal nor perpendicular, the surface is called inclined surface. The vertical slide of the tool head is swiveled to the required angle machining 'V' grooves and dovetail grooves are some examples for angular machining.

Machining the inclined (angular) surfaces can be done in several ways.

3.14 Special Operations

Apart from machining horizontal, vertical and vertical flat surfaces, the shaping machine can do some special machining operations.

Machining dove tail groove

Dove tail joint is machined on two separate pieces of work as male and female elements. The required shape is marked on the face of the work and the unwanted metal is first removed by the round nose tool. A special form tool is used to finish the machining.

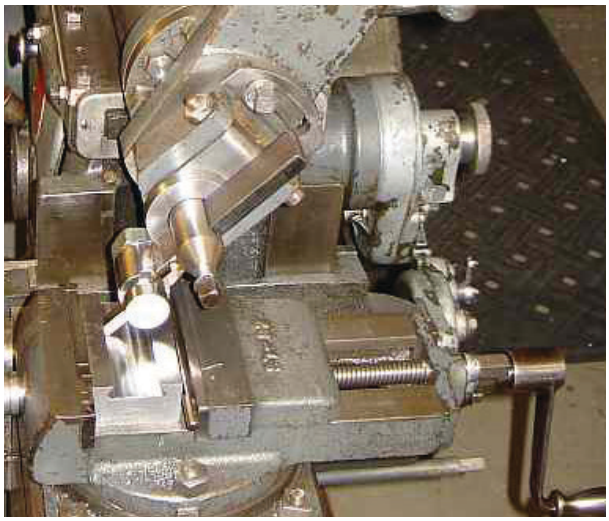

Machining Dove tail groove

Machining external keyways

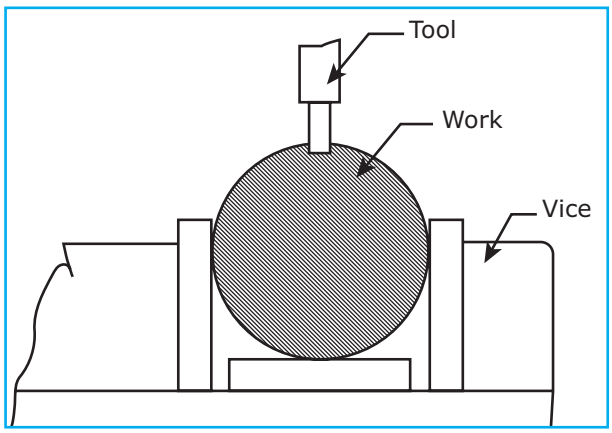

Machining external keyways refers to the cutting of long slots along the length of cylindrical rods. Initially a round nose tool is used and then a square nose tool is used to finish the operation. A hole of depth equal to the depth of the keyway is made at the blind end to leave a clearance to the tool at the end of the stroke. When a keyway is cut at the middle of the shaft, holes are drilled at both ends of the keyway.

Machining internal keyways

Internal keyways are cut inside the holes of gears and pulleys. It is done by holding the tool on a special tool holder called 'snout bar'. The snout bar is directly fitted on the clapper block.

Illustrate machining external keyway and an internal keyway respectively.

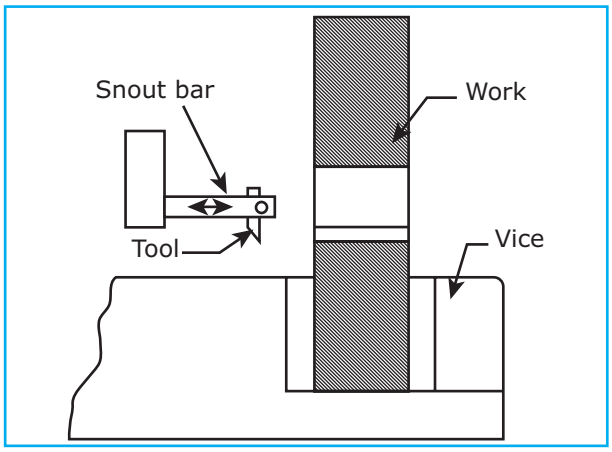

Machining internal keyways

T-slot machining

The shape of the T -slot is marked on the face of the work. A parting off tool is fitted on the tool post and a rectangular slot is machined at the middle for the required depth. The broad base of the 'T' slot is machined by a T-slot cutting tool. Figure illustrates machining a 'T' slot.

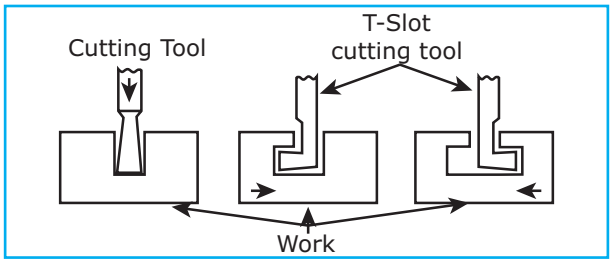

'T' slot cutting

Machining a rack gear

Rack gear cutting is a process of cutting teeth elements at linear pitch on a flat piece of work. Firstly, the groove is machined with a square nose parting tool.

Then, the groove is further machined with a form tool confirming the shape of the teeth.

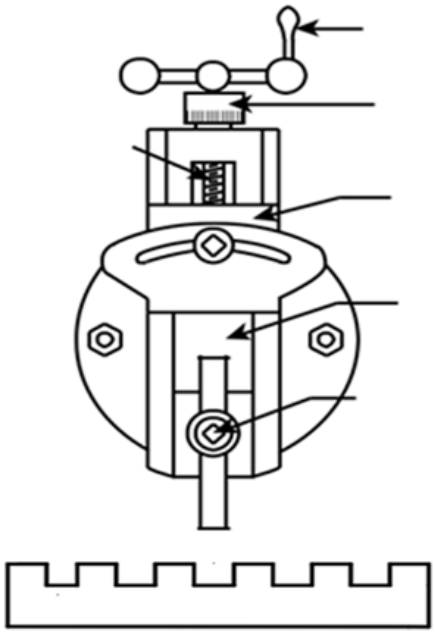

3.15 Cutting Speed, Depth of cut and feed

Cutting speed

The distance an object travels in a particular period of time is known as speed. In a shaper, the cutting speed is the speed at which the metal is removed by the cutting tool in a period of one minute. In a shaper, the cutting speed is considered only during the forward cutting stroke. This is expressed in meter per minute.

$$\text{Cutting speed} = \frac{\text{length of the cutting stroke}}{\text{time required by the cutting stroke}}$$

The cutting speed differs to suit different machining conditions like work material, the finish required, and the type of the tool and the rigidity of the machine.

Depth of cut

Depth of cut is the thickness of metal that is removed during machining. It is the perpendicular distance measured between the machined surface and the uncut surface of the workpiece. It is expressed in mm or in inches.

Feed

Feed is the relative movement of the work or tool in a direction perpendicular to the axis of reciprocation of the ram per cutting stroke. It is expressed in mm per stroke.

Safety precautions

The following safety precautions should be observed while working on a shaping machine.

Safety precautions regarding operators

1. No alteration or adjustment should be done on the machine parts while the machine is functioning.
2. Clamps holding the work should not be adjusted while the machine is in operation.
3. The machine is to be stopped before cleaning the metal chips
4. The sharp edges of the work should be handled with care.
5. The measuring of the work should be done only after the machine is switched off.

6. The operator should not seek the assistance of others for starting and stopping the machine.
7. Machining of precision parts and internal surfaces of the workpiece are to be carried out with great care and attention.
8. The operator should stay away from direction of the ram movement.

Safety hints regarding the shaping machine

1. The workpiece is to be positioned in such a way that ram will not hit the workpiece while performing the forward stroke.
2. Stroke length of the ram and the position of stroke are to be set correctly before performing the operation.
3. Proper holding of the work should be ensured. Work holding devices like clamps and vise jaws should not come in the way of the reciprocating tool.
4. We have to ensure that the tool or the tool post or the ram will not hit the job or the job holding clamps or the vise jaws.
5. The machine should be stopped before making any adjustment to the stroke length, position of stroke, apron and tool position.

ACTIVITIES

1. Visiting the nearby workshop or polytechnic or engineering college for knowing what type of operations done in shaping machine.
2. To make different models shapes of cubic square, cubic rectangle and prism by using wood (or) thermocol sheet.

QUESTIONS

EDCQN

Part – I

Choose the correct option

(1 Mark)

1. The shaping machine was designed by
   a. Henry Maudslay
   b. Eli Whitney
   c. Michael Faraday
   d. James Nasmith
2. The operation mainly done on a shaping machine is
   a. Turning
   b. Drilling
   c. Machining a flat surface
   d. Thread cutting

3. The part involved in reciprocation by quick return is

   a. Table

   b. Ram

   c. Column

   d. Crossrail

4. The ratio of forward stroke time to return stroke time is

   a. 3:2 b. 5:3

   c. 1:3 d. 1:2

5. The part used to lift the tool while the ram moves the returning stroke.

   a. Tool head

   b. Work table

   c. Clapper block

   d. Cross slide

Part II

Answer the following questions in one or two sentences

(3 Marks)

6. Define "Shaping".
7. List any four parts of shaper
8. What is the use of crank & slotted link mechanism?
9. Define "cutting speed" of shaping machine.
10. Define "feed" of a shaping machine.
11. Mention the "depth of cut" of shaping machine.
12. What is the use of a clapper box?
13. What is the use of swivel tool head of a shaping machine?

Part – III

Answer the following questions in about a page. **(5 Marks)**

14. List out the types of shaping machines.
15. Write short notes on

    a. Changing the stroke length of the ram

    b. position of the ram.

Part – IV

Answer the following Question in details **(10 Marks)**

16. Draw a neat diagram of a shaping machine and explain its important parts.
17. Explain the crank & slotted link mechanism of quick return of the ram with a diagram.
18. Explain any four work holding devices used in a shaping machine with diagrams.
19. Explain any four operations performed in a shaping machine with diagrams.



CHAPTER 04

GRINDING MACHINE

9NCY5

Learning Objective

- To understand the various types of grinding machine and its construction details
- To understand diffrent types of operation performed in grinding machine
- To understand Abrasives and its types
- To understand manufacturing of grinding wheel and mounting of grinding wheel
- To understand dressing and truing of grinding wheels

CONTENTS

4.1 Introduction
4.2 Process of machining
4.3 Types of grinding machine
4.4 Size of grinding machine
4.5 Grinding Operation
4.6 Grinding wheel
4.7 Abrasive
4.8 Grinding wheel specification
4.9 Mounting of grinding wheel
4.10 Glazing
4.11 Loading
4.12 Chattering
4.13 Balancing of grinding wheel
4.14 Cutting speed, Feed and Depth of cut

4.1 Introduction

Grinding is a metal cutting operation where metal is cut by a rotating abrasive wheel. A machine that performs the grinding operation is called grinding machine. Grinding wheel contains thousands of abrasive particles. Grinding is used to obtain very high dimensional accuracy and good surface finish on the workpiece. By grinding hard surface can also be done. The amount of material removed in this process is very less, usually 0.25 mm to 0.50 mm. The accuracy of the grinding process is 0.000025 mm

XII BME_English version CHAPTER 04.indd 67 31-01-2023 18:45:50

Grinding machine

Ambrose Webster was an American scientist; citizen of Massachusetts invented the small grinding machine in 1860.

Grinding wheel

The scientist named Suyin Palson was invented grinding wheel with mixture of emery powder, clay and water in 1873.

4.2 Process of machining

Grinding wheel is made of small abrasive particles held together with bonding materials. Grinding machine supports and rotates the grinding wheel. Proper grinding wheel should be selected with respect to workpiece. Grinding machine supports the workpiece by means of chuck, between two centres or directly on the worktable with proper clamping device.

While grinding, the grinding wheel is rotated and the workpiece is fed against the wheel. It is used for rough and finishing process of flat, cylindrical and tapper surfaces, finishing internal cylinders, forming and sharpening the cutting tools.

4.3 Types of Grinding Machine

According to the accuracy of the work to be done on a grinding machine, they are classified as

1. Non-Precision grinding machines
2. Precision grinding machines

4.3.1 Non-Precision Grinding Machine

The non-precision grinding machines are used to remove unwanted projections from casting and welding, when the surface finish is not important. The main types of non-precision grinders are

1. Hand grinding machine
2. Bench grinding machine
3. Floor stand grinding machine
4. Flexible shaft grinding machine
5. Swing frame grinding machine
6. Abrasive belt grinding machine

Hand Grinding Machine

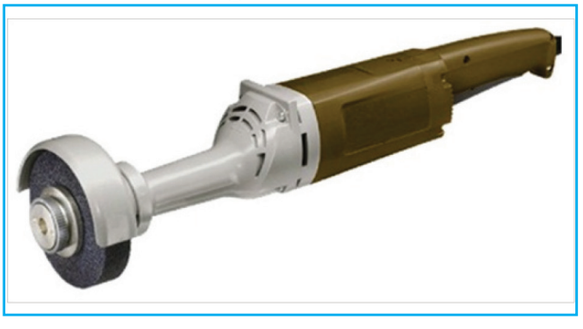

It is a small grinder which can be carried from one place to another place easily. A small grinding wheel is mounted at the end of motor shaft. The motor is connected by a long wire to the main switch box. It is used for grinding large forgings, casting, welded joints and sheet metal work etc.

Bench grinding machine

This grinder is mounted on a bench. Two grinding wheels are connected to both ends of the motor shaft. The wheels are covered by guards. A Work rest is provided for supporting the work piece while grinding.

XII BME_English version CHAPTER 04.indd 68 31-01-2023 18:45:50

Bench grinders are mainly used for grinding of hand tools and small parts.

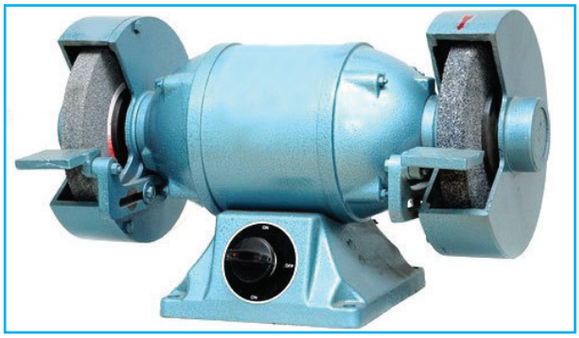

Bench grinding machine

4.3.2 Precision Grinding Machine

Precision grinders are used for finishing parts to a very accurate dimension. The main types of precision grinders are

1. Cylindrical grinding machine
2. Internal grinding machine
3. Centreless grinding machine
4. Surface grinding machine
5. Tool and cutter grinding machine
6. Special grinding machine

Cylindrical grinding machine

The machine which is used to grind external and internal surfaces of cylindrical object is called cylindrical grinding machine. The workpiece is held between two centers. The work piece maybe cylindrical or taper surfaces. There are two types of cylindrical grinding machines, they are

1. External cylindrical grinding machine
2. Internal cylindrical grinding machine

External cylindrical grinding machine

The machine which is used to grind external surface like cylindrical and taper surfaces is called external cylindrical grinding machine.

Base

The base is made of cast iron and rest on the floor. It supports all other parts of the grinder. The top of the base is accurately machined and provides guideways for the table to slide on. The base also acts as a houses for the table driving mechanism.

Tables

The tables are mounted on top of the base. There are two tables namely upper table and lower table. The lower table slides on the guideways on the bed. Table can be moved by hand or power. It has 'T' slots for securing the head stock and tail stock.

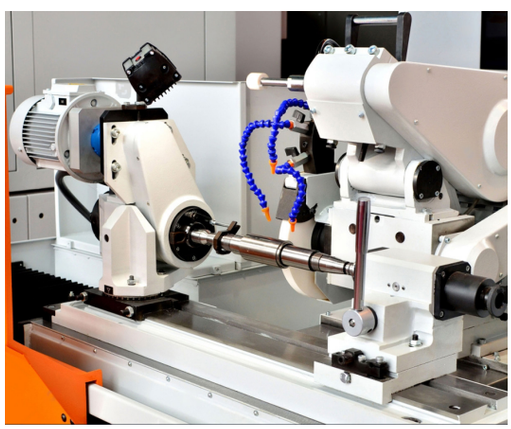

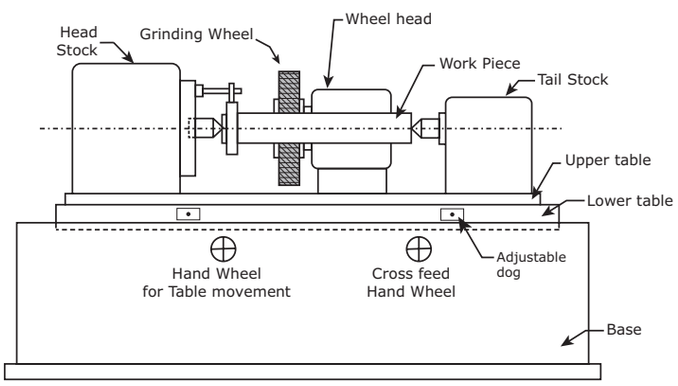

Cylindrical grinding machines

XII BME_English version CHAPTER 04.indd 69 31-01-2023 18:45:51

Upper table is mounted on the lower table. Upper table can be swiveled upto ±10° and clamped in position. Adjustable dogs are clamped in longitudinal slots at the side of the lower bed. These trip dogs actuate the table reversing lever to control the table movement.

Head stocks

The head stock is situated at the left side of the upper table. It supports the workpiece by means of a centre and drives it by means of a dog. It may hold and drive the workpiece in a chuck. It houses the mechanism meant for driving the work.

Tailstock

The tailstock is situated at the right side of the table. It can be adjusted and clamped in various positions to accommodate different lengths of workpieces.

Wheel head

The wheel head is placed over the bed at its back side. The wheel head may be moved at right angles to the table guideways. It is operated by hand or by power to feed the wheel to work. The wheel head carries a grinding wheel. Separated motor is used for driving the grinding wheel. The grinding wheel rotates at about 1500 to 2000 rpm.

Surface grinding machine

Surface grinding machines are employed to finish plane or flat surfaces and tapered surfaces. There are four different types of surface grinders. They are

1. Horizontal spindle reciprocating table type.
2. Horizontal spindle rotary table type.
3. Vertical spindle reciprocating table type.
4. Vertical spindle rotary table type.

Horizontal spindle surface grinding machine

The most of the surface grinders are of horizontal spindle type. The grinding wheel is mounted on a horizontal spindle and the table is reciprocated to perform grinding operation.

In this type of machine, grinding is performed by the abrasives on the periphery of the wheel. Though the area of contact between the wheel and the work is small, the speed is uniform over the grinding surface and the surface finish is good.

Base

The base is made of cast iron. It is a box like casting which houses all the table drive mechanisms. The column is mounted at the back of the base which has guideways for the vertical adjustment of the wheel head.

Saddle

Saddle is mounted on the guideways provided on the top of the base. It can be moved across towards or away from the column.

Table

The table is fitted carefully in the machined guideways of the saddle. It reciprocates along the guideways to provide the longitudinal feed. The table is provided with 'T' slots for clamping workpiece directly on the table or for clamping fixtures or magnetic chuck.

XII BME_English version CHAPTER 04.indd 70 31-01-2023 18:45:51

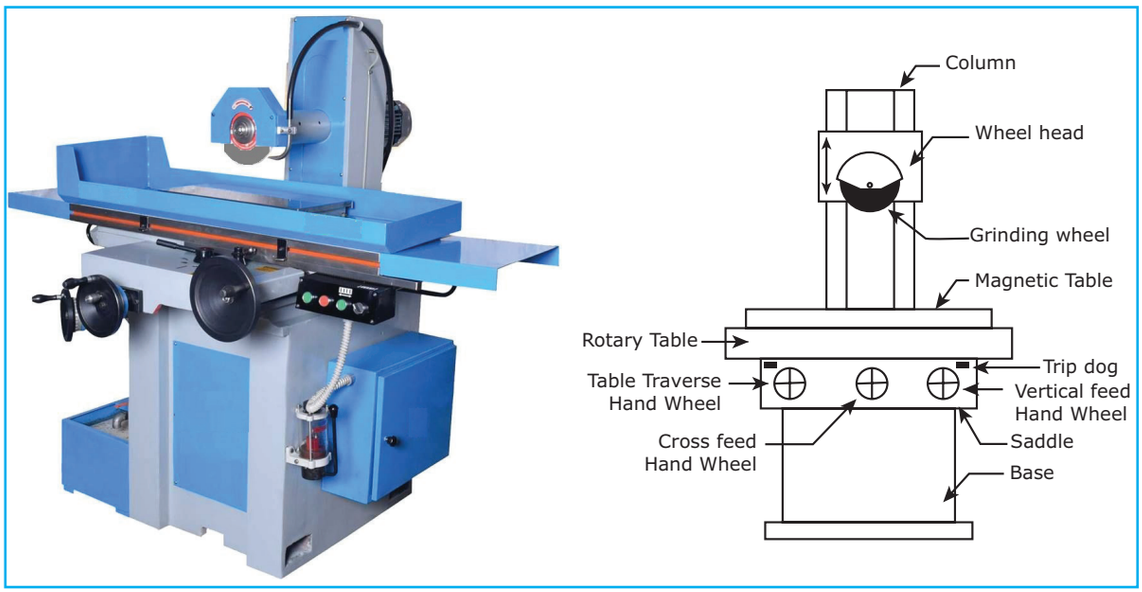

Horizontal Spindle Surface Grinding Machine

Wheel head

An electric motor is fitted on the wheel head to drive the grinding wheel. The wheel head is mounted on the guideways of the column which is secured to the base. It can be raised or lowered with the grinding wheel to accommodate work pieces of different heights and to set the wheel for depth of cut.

Vertical spindle surface grinding machine

The face or sides of the wheel are used for grinding the surface of the work pieces. The area of contact is large and stock can be removed quickly. But a criss-cross patterns of grinding scratches are left on the work surface. A grinding wheel is mounted on the vertical spindle of the machine. The work is held on the table and grinding is done.

The base of the machine is a box like casting. The base is very similar to one of the horizontal spindle grinding machine. It houses all the table drive mechanism.

The table is mounted on the top of the base. The magnetic chuck is mounted on the work table. A grinding wheel is mounted

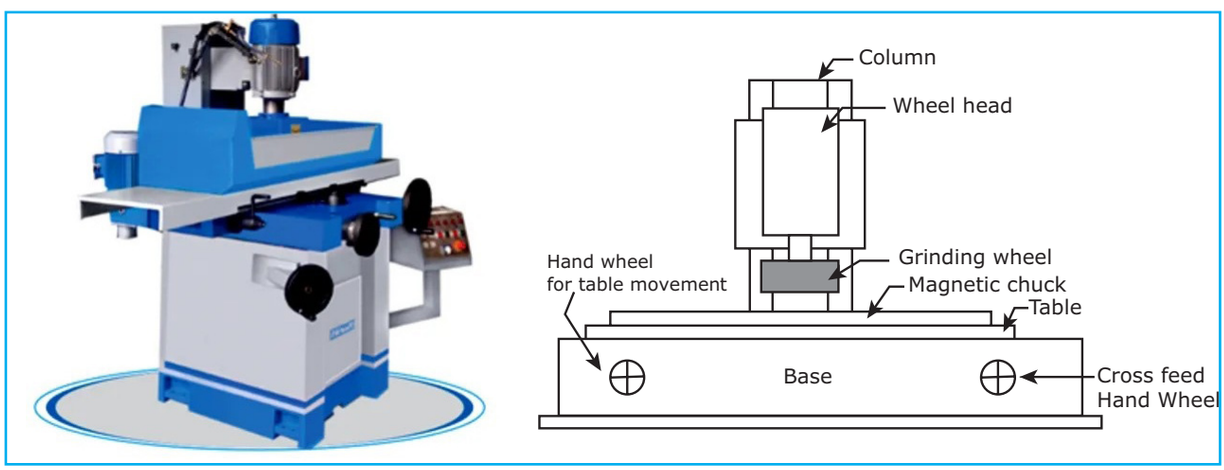

Vertical spindle surface grinding machine

XII BME_English version CHAPTER 04.indd 71 31-01-2023 18:45:51

DO YOU KNOW?

First vertical rotary surface grinder was invented by Henry K. Spencer of North Carolina in United States

on the wheel head which slides vertically on the column. The table is used to reciprocate or rotate to bring the work surface below the grinding wheel to perform grinding. It is used for grinding large quantity of small workpieces. Considering the quality of surface finish obtained, the horizantal spindle type machines are widely used.

Tool and cutter grinding machine

Tool and cutter grinders are mainly used for to sharpen the cutting edges of various tools and cutters. They can also use to grind the jigs, fixtures, dies and gauges.

Base

The base of the machine gives rigidity and stability to the machine. It is bolted rigidly to the floor. It supports all the other parts of the machine. The base is a box type and houses all the mechanisms for the saddle movements.

Saddle

The saddle is mounted directly on the top of the base and slides over it. The column supporting the wheel head is mounted on the saddle. It can be moved up or down and swiveled to each side.

Table

The table rests and moves on a top base, which is mounted over the saddle. The table has two layers. The work table is mounted on the sub-table which has 'T' slots for mounting the work and special attachments are used on the machine. The work table can be swiveled while grinding tapers.

Head stock and tail stock

Head stock and tail stock are mounted on either side of the table. The work piece is positioned between the centers and grinding operation to be done.

DO YOU KNOW?

The inventor of tool and cutter grinding machine is Frank W. Curtis belonged to USA

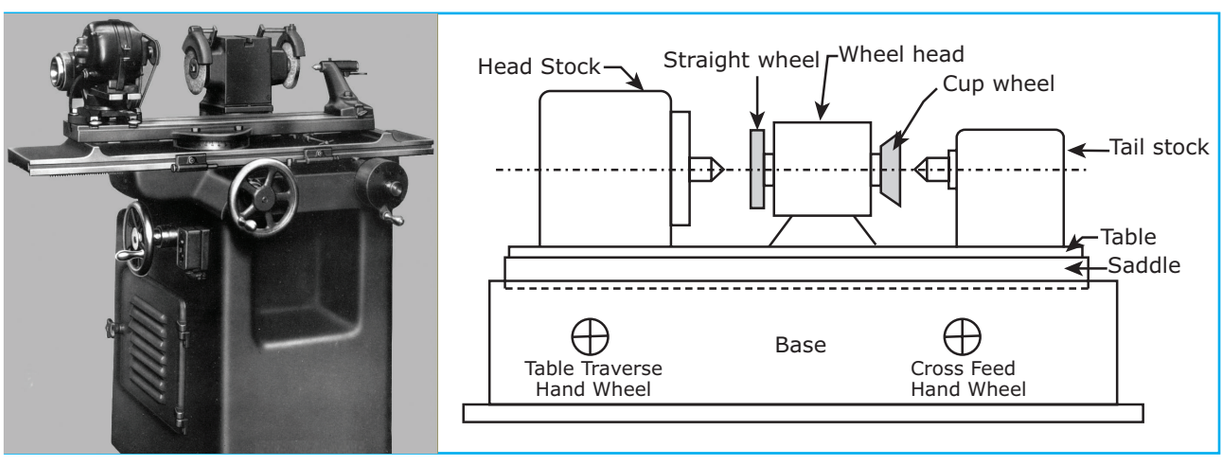

Tool and cutter grinding machine

XII BME_English version CHAPTER 04.indd 72 31-01-2023 18:45:51

Wheel head

The wheel head is mounted on the column on the back of the machine. It can be swiveled and positioned in the base for different set-up. A straight wheel and a cup wheel are mounted on either side of the wheel head.

4.4 Specification of grinding machine

- The size of a grinding machine is specified according to the size of the largest work piece that can be mounted on the machine.
- Cylindrical grinding machine, is specified by the diameter and length of the largest workpiece that can be held.
- Internal cylindrical grinding machine is specified by the maximum diameter of the workpiece that can be held in the chuck and maximum stroke length of the wheel.
- Surface grinding machine, is specified by the table area and the maximum height of the grinding wheel from the table surface.
- Rotary table or chuck type grinding machine is specified by the maximum diameter of the table or chuck.
- Tool and cutter grinder is specified by the maximum size of tool and cutters that can be sharpened and dressed

4.5 Grinding Operations.

Grinding is metal cutting operations of removing excess material from metal parts by means of a rotating hard abrasive wheel that act as a tool. The following operations are generally performed in a grinding machine.

1. Cylindrical grinding
2. Taper grinding
3. Gear grinding
4. Thread grinding

Cylindrical grinding

Cylindrical grinding is a metal cutting operation, where metal is cut by a rotating abrasive wheel. The work piece is mounted and rotating between two centers in a cylindrical grinding machine. The work is fed longitudinally against the rotating grinding wheel to perform grinding. The upper table of the grinding machine is set at 0^0 during the operation.

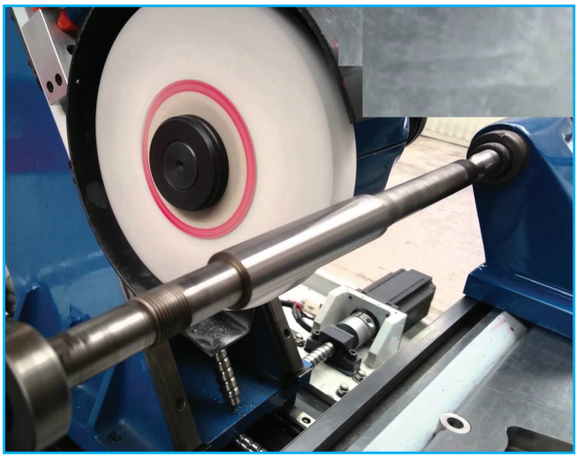

Cylindrical grinding

Taper Grinding

Taper grinding on long work pieces can be done by swivel the upper table at required angle. If the workpiece is short, the wheel head may be swiveled to the required taper angle. Another method of grinding external taper is to truing the face of the grinding wheel by a diamond tool dresser to the required angle. In this case, the wheel head and the table are not swiveled.

XII BME_English version CHAPTER 04.indd 73 31-01-2023 18:45:52

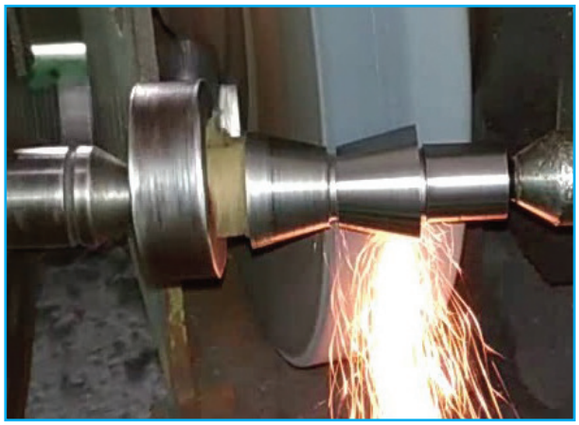

Taper Grinding

Gear grinding

The teeth of gears are grind accurately on gear grinding machines for their shape. Gear grinding is done by the generating process or by using a form grinding wheel.

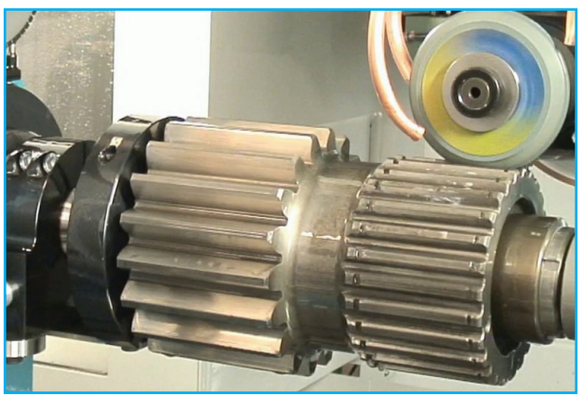

Gear grinding

The generating process makes use of two saucer shaped grinding wheels. These wheels are used to grind two faces of successive teeth.

The forming process makes use of formed wheels to grind a tooth at a time. This is a very precise method of performing gear grinding.

Thread grinding

Thread grinding machines are used to grind threads accurately. The grinding wheel itself is shaped to the thread profile. These formed grinding wheels have one or multi threads on them.

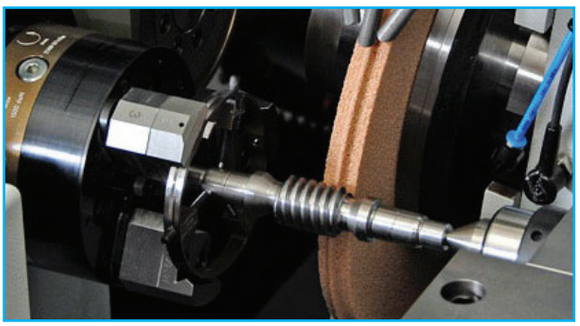

Thread grinding

4.6 Grinding Wheel

A grinding wheel is a multi-tooth cutter made up thousands of hard particle known as abrasives. The abrasive grains are mixed with a suitable bond, which act as a matrix to manufacture grinding wheels.

According to construction, grinding wheels are classified as follows.

1. Solid grinding wheels
2. Segmented grinding wheels
3. Mounted grinding wheels

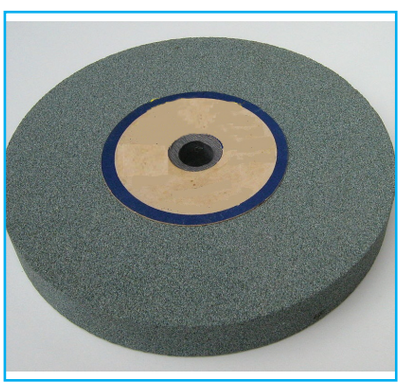

Solid grinding wheels



Segmented grinding wheels



Mounted grinding wheels

XII BME_English version CHAPTER 04.indd 74 31-01-2023 18:45:52

4.7 Abrasive

Abrasives are used for grinding and polishing operations. It should be pure and have uniform physical properties of hardness, toughness and resistance to fracture. They are two types of abrasives

1. Natural abrasive
2. Artificial abrasives

Natural Abrasives

The natural abrasives are obtained from the Earth's crust. They include sand stone, emery, corundum and diamond.

Sandstone is used as abrasive to grind softer materials only. Emery is a natural aluminium oxide. It contains aluminium oxide, iron oxide and other impurities. Corundum is also a natural aluminium oxide and other impurities. Emery and corundum have a greater hardness and better abrasive action than sandstone.

Diamond is the hardest natural abrasive. It is used in making grinding wheels to grained cemented carbide tools.

Artificial Abrasives

Artificial abrasives are classified as follows

1. Silicon carbide abrasives
2. Aluminium oxide abrasives.

Silicon carbide abrasives

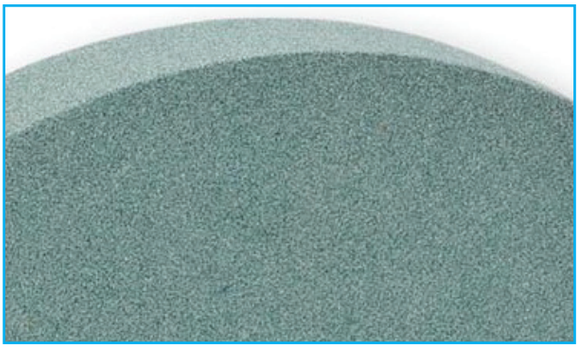

Silicon carbide

Silicon carbide manufactured from 56% of silica, 34% of powdered coke, 2% of salt and 12% of saw dust in an electric furnace that is built of loose brick work. There are two types of silicon carbide abrasives green grit and black grit. Silicon carbide is next to diamond in order of hardness, but it is not tough enough as aluminium oxide. It is used for grinding materials of low tensile strength such as cemented carbides,

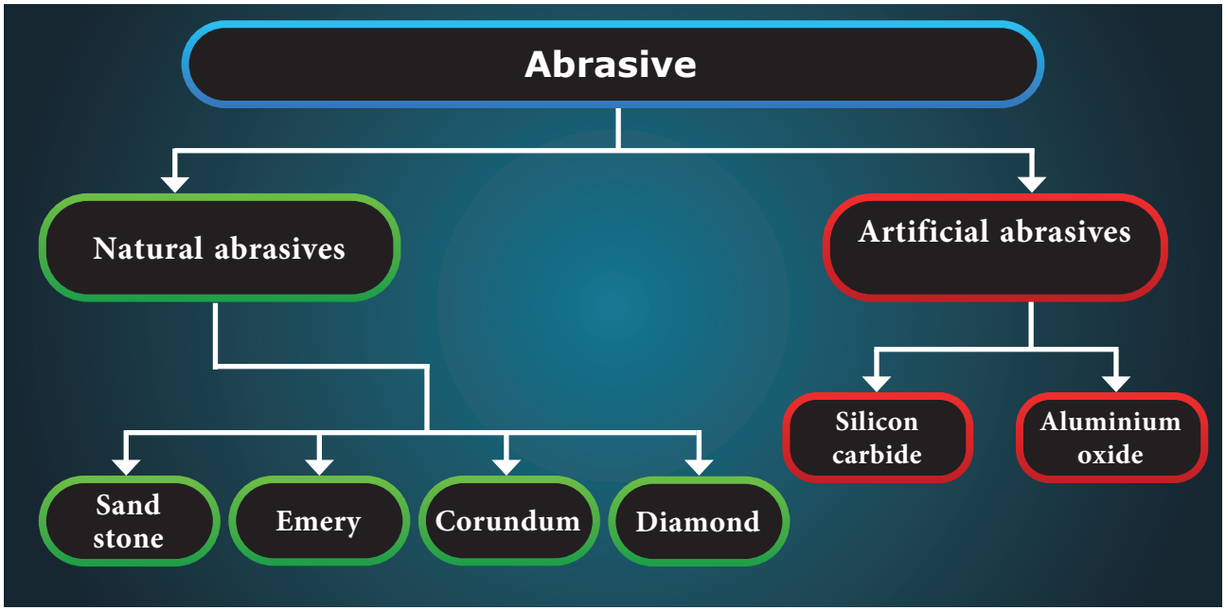

XII BME_English version CHAPTER 04.indd 75 31-01-2023 18:45:52

ceramic materials, grey cast iron, brass, bronze, copper, aluminium, vulcanized rubber etc. This is manufactured under the trade names of carborundum. It is denoted by the letter 'S'.

Aluminum oxide

Aluminium oxide is manufactured by heating mineral bauxite, a hydrated aluminium oxide, clay containing silica, iron oxide, titanium oxide etc., mixed with ground coke and iron borings in an electric furnace.

Aluminum oxide is tough and not easily factured, so it is better adopted to grinding materials of high tensile strength such as most steels, carbon steels, high speed steels, wrought iron and tough bronzes. This is manufactured under the name aloxite. This is denoted by letter 'A'

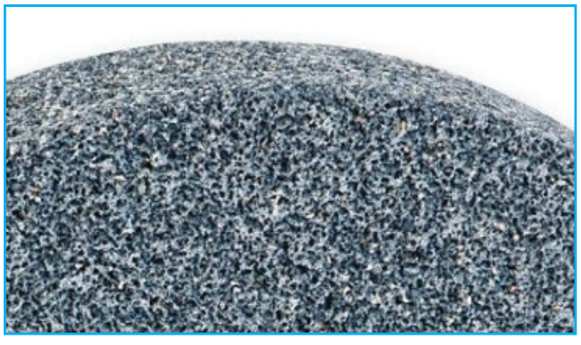

Aluminum oxide

Types of bond

A bond is an adhesive substance that is employed to hold abrasive grain together in the form of grinding wheels. There are several types of bonds. Different grinding wheels are manufactured by mixing hard abrasives with suitable bonds. The table containing the types of wheel manufactured using different types of bond and their symbols in given below.

Type of bond	Symbol	Grinding Wheel
Vitrified	V	Vitrified wheel
Silicate	S	Silicate wheel
Shellac	E	Elastic wheel
Resinoid	B	Resinoid wheel
Rubber	R	Vulcanized wheel
Oxychloride	O	Oxychloride wheel

Grit, Grade and structure

Grit

The grinding wheel is made of thousands of abrasives grains. The grain size or grit number indicates the size of the abrasive grains used in making a wheel or the size of the cutting teeth.

Grain size is denoted by a number indicating the number of meshes per linear inch of the screen through which the grains pass when they are graded. There are four different groups of the grain size namely coarse, medium, fine and very fine. If the grit number is large, the size of the abrasive is fine and a small grit number indicates a large grain of abrasive.

Grain size	Grain numbers
Coarse	10 12 14 16 24
Medium	30 36 46 54 60
Fine	80 100 120 150 180
Very fine	220 240 280 320 500 600

Grade

The grade of grinding wheel refers to the hardness with which the wheel holds the abrasive grains in place. It does not refer

XII BME_English version CHAPTER 04.indd 76 31-01-2023 18:45:52

to the hardness of the abrasive grains. The grade is indicated by a letter of the English alphabet A to Z. The term 'soft' or 'hard' refers to the resistance of a bond offers to disruption of the abrasives. A wheel from which the abrasive grains can be easily dislodged is called soft whereas the one, which holds the grains more securely, is called hard. Hard wheels are recommended for soft materials and soft wheels for hard materials. The grade of the bond can be classified in three categories.

Grade	Denoted English letters
Soft	A B C D E F G H
Medium	I J K L M N O P
Hard	Q R S T U V W X Y Z

Structure

The relative spacing occupied by the abrasives and the bond is referred to as structure. It is denoted by the number and size of void spaces between grains. It may be 'dense' or 'open'. Open structured wheels are used to grinding soft, rough and ductile materials. Dense wheels are used for grinding hard and brittle materials.

Structure	Identification number
Dense	1 2 3 4 5 6 7 8
Open	9 10 11 12 13 14 15 and above

4.8 Grinding Wheel Specifications

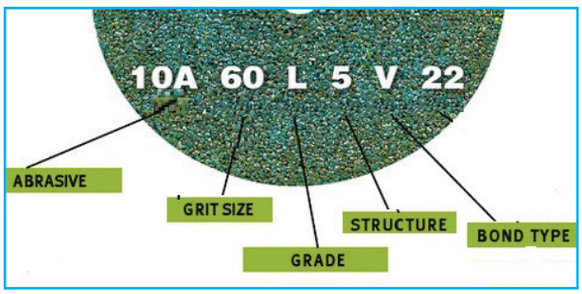

The Indian standard marking system of grinding wheels has been prepared with a view of establishing a uniform system of marking of grinding wheels to designate their various characteristics.

Characteristic	Meaning
Prefix	Manufacturer's abrasive type symbol
First letter	Types of abrasive
First Number	Size of abrasive
Second letter	Grade of bond
Second number	Structure of the grinding wheel
Third letter	Types of bond
Suffix	Manufacturer's type symbol

For specification of grinding wheel,outside diameter, width and centre hole diameter of the grinding wheel are also to be added. The meaning of the given marking on a grinding wheel

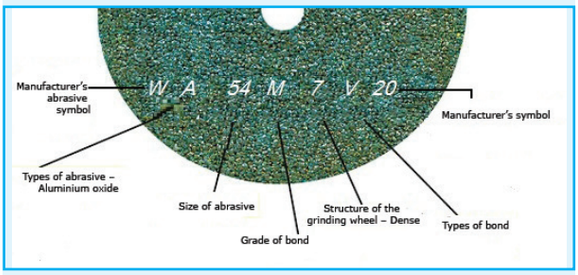

W A 54 M 7 V 20

W – Manufacturer's abrasive symbol

A – Types of abrasive – Aluminium oxide

54 – Size of abrasive – Medium

M – Grade of bond – Medium

7 – Structure of the grinding wheel – Dense

V – Types of bond – Vitrified

20 – Manufacturer's symbol

XII BME_English version CHAPTER 04.indd 77 31-01-2023 18:45:52

4.9 Mounting The Grinding Wheel

Great care must be taken in mounting the grinding wheel on the spindle. The following points are important in connection with mounting of grinding wheel.

1. All wheels should be inspected before mounting to make sure that they have not damaged. The wheel is put on an arbor and is subjected to slight hammer blows. A clear, ringing, vibrating sound must be heard. This test is applicable to vitrified and silicate wheels
2. The grinding wheel should not be forced on the spindle and they should have an easy fit on the spindle.
3. The length of the lead bush should not be more than the width of the wheel face.



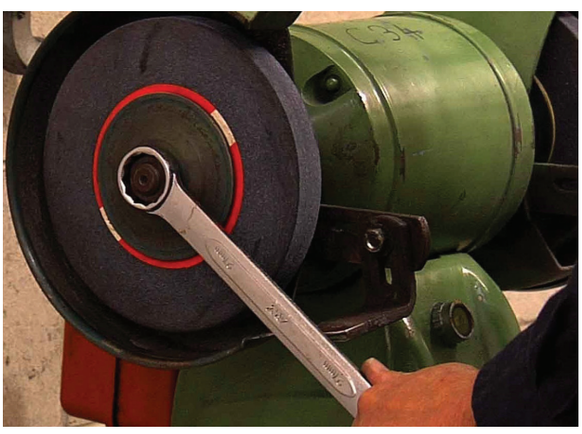

4. Flanges of equal diameter are fitted at both sides of the wheel. The flange diameter should enough be to hold the grinding wheel conveniently. Atleast the flange diameter must be equal to the half of the grinding wheel diameter.
5. The sides of the wheel and the flanges should be flat. Flanges contact the wheel only with the angular clamping area.
6. Washers of compressible materials such as cardboard, leather, rubber etc. not over 1.5 mm thick should be fitted between the wheel and its flanges. The diameter of washers may be normally equal to the diameter of the flanges.
7. The inner flange should be keyed to the spindle, whereas the outer flange should have an easy sliding fit with the spindle.
8. The nut should be tightened to hold the wheel firmly.
9. Wheel guards should be fitted at required place before starting the grinding machine.
10. After mounting the grinding wheel, the wheel should be made to run idle for a period of about 10 to 15 minutes, grinding wheels must be dressed and trued before any work can be started.

4.10 Glazing

Glazing of the wheel is a condition in which the face of the cutting edge look like glass appearance. Glazing takes place if the wheel is rotated at very high speeds and is made with harder bonds. Rotating the wheel at lesser speeds and using

XII BME_English version CHAPTER 04.indd 78 31-01-2023 18:45:52

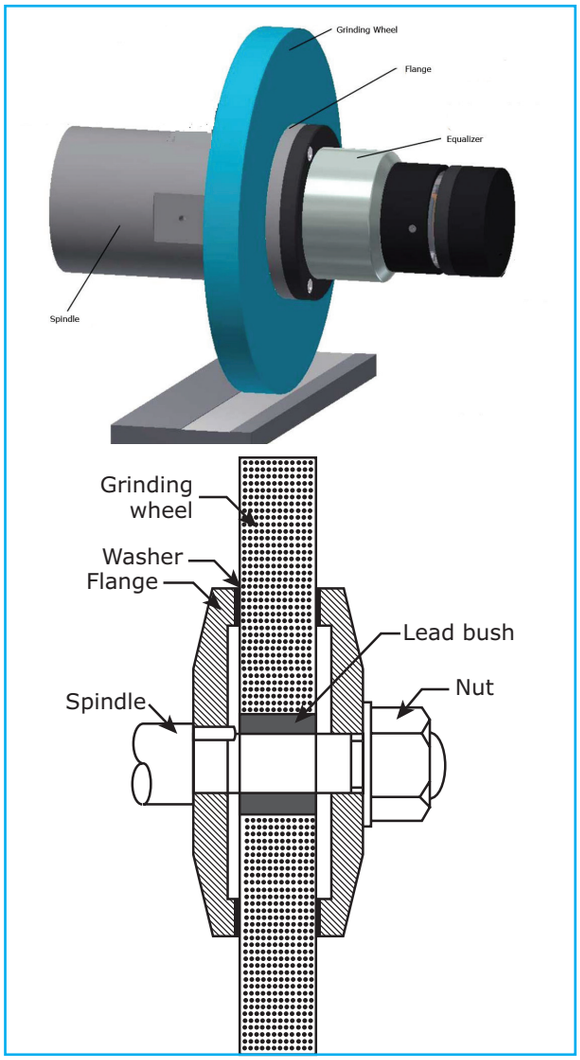

Method of Mounting Grinding Wheel

soft bonds are the remedies. The glazed wheels are dressed to have fresh, sharp cutting edges.

4.11 Loading

The wheel is loaded in the particles of the metal being adhere to the wheel. The openings or pores of the wheel face are filled up with the metal. It is caused by grinding a softer material or by using a very hard bonded wheels and running it too slowly. It may also take place if too deep cuts are taken by not using the right cutting fluid.

4.12 Chattering

Sometimes the wary pattern of criss cross lines are visible on the ground surface. This condition is known as chattering. It takes place when the spindle bearings are not fitted correctly and because of the imbalance of the grinding wheel.

Dressing and truing of grinding wheel

If the grinding wheels are loaded or gone out of shape, they can be corrected by dressing or truing of the wheels.

Dressing

Dressing is the purpose of breaking away the glazed surface so that sharp particles are again presented to the work. The common types of wheel dresser known as star-dressers or diamond tool dressers.

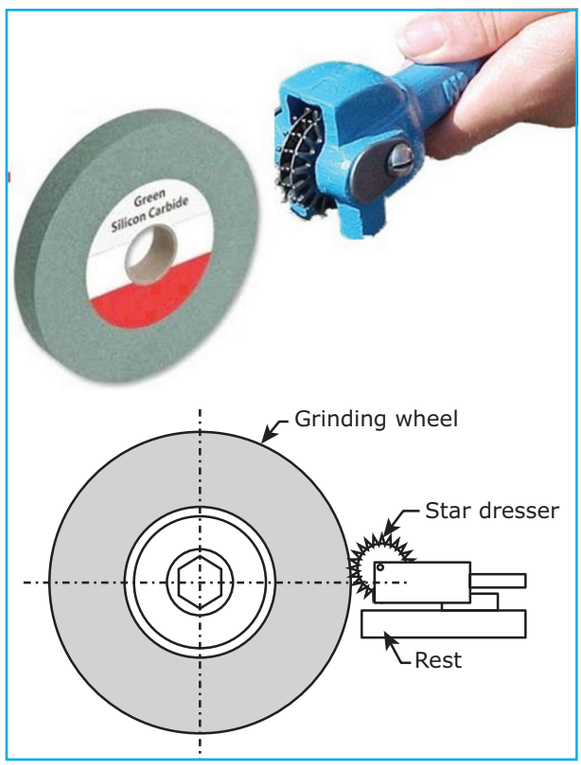

Dressing grinding wheel

XII BME_English version CHAPTER 04.indd 79 31-01-2023 18:45:53

Star dresser consists of a number of hardened steel wheels on its periphery. The dresser is held against the face of the revolving wheel and moved across the face to dress the wheel surface. This type of dresser is used particularly for coarse and rough grinding wheels.

For precision and high finish grinding wheels in small industrial diamonds tool dresser are used. The diamonds are mounted in a holder. The diamond should be kept pointed down at an angle of 15^0 and required amount of coolant is applied while dressing very light cuts may be taken with diamond tools.

Truing

The grinding wheel becomes worn from its original shape because of breaking away of the abrasive and bond. Sometimes the shape of the wheel is required to be changed for form grinding. For these purpose the shape of the wheel is corrected by means of diamond tool dressers. This is known as truing of grinding wheels.

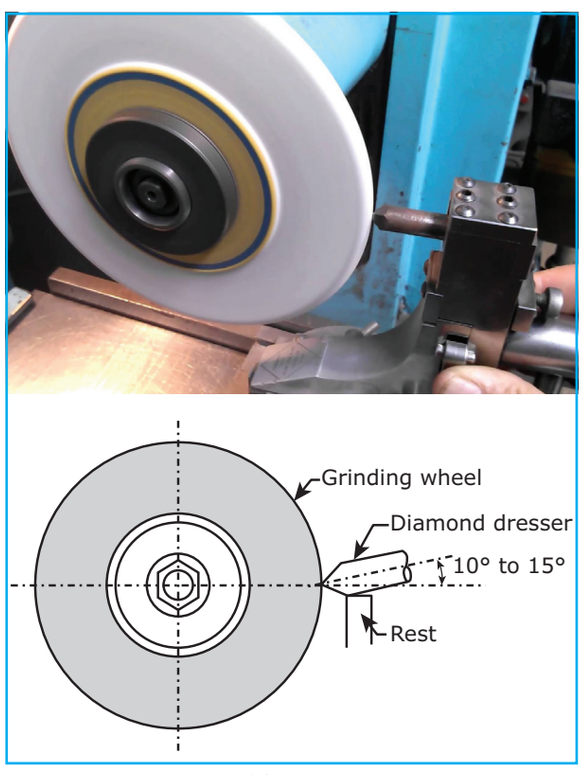

Truing

In first, the diamond dresser is mounted on a work rest upon the work table. Diamond tool dressers are set on the wheels at 10^0 to 15^0 and moved across with a feed rate that must not exceeds 0.02 mm. A good amount of coolant is applied during truing of grinding wheels.

4.13 Balancing Of Grinding Wheel

The weight and density of the grinding wheel should be evenly distributed throughout the body of the wheel is known as balancing. Otherwise the wheel will rotate without balance. Wheel balancing is to be made by dressing and truing of grinding wheels. The grinding wheels are balanced by mounting them on test mandrels. The wheel along with the mandrel is rolled on knife edges to test the balance and corrected.

4.14 Cutting Speed,Feed and Depth of Cut

Cutting speed

Cutting speed of a grinding process is the relative speed of the grinding wheel and the workpiece. It is expressed in meter/ minute.

Cutting speed (c.s) = πDN /1000 metre/ min

π = 22/7 (or) 3.14

D = The diameter of the grinding wheel in mm

N = The speed of the grinding wheel in r.p.m.

XII BME_English version CHAPTER 04.indd 80 31-01-2023 18:45:53

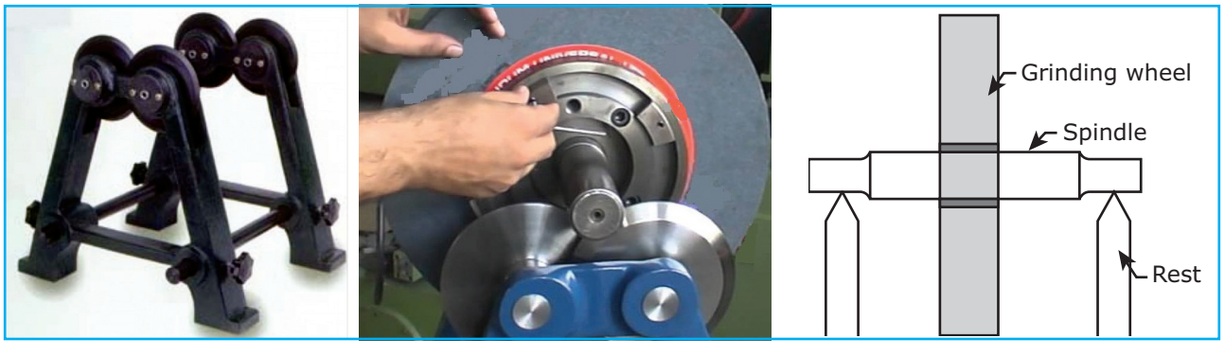

Wheel Balancing

Feed

Feed in a grinding process is the longitudinal movement of the work mounted on the table per revolution of the grinding wheel. It is express in mm per revolution of the workpiece.

The longitudinal feed during rough grinding is approximately 0.6 mm to 0.9 mm of the width of the wheel and 0.4 mm to 0.6 mm of the width of the wheel during finish grinding.

Depth of cut

The thickness of the metal layer removed from the work in one pass of the wheel is known as depth of cut. It is expressed in mm. Depth of cut is kept ranging from 0.005 to 0.04 mm. It is given by,

π = D1-D2/2 mm

Where,

t = depth of cut in mm

D1 = Work piece diameter before grinding

D2 = Work piece diameter after grinding

ACTIVITY

1. Arrange the students to visit nearby industry, to demonstrate about the different types of grinding machines and its operation.

QUESTIONS

PART I

Choose the correct option 1 Mark

1. The accuracy obtained by precision grinding is
   a. 0.000025 mm
   b. 0.0025 mm
   c. 0.00125 mm
   d. 0.00625 mm

2. The cutting tool with several thousands of cutting edges is
   a. Lathe cutting tool
   b. Drill
   c. Grinding wheel
   d. Milling cutter

XII BME_English version CHAPTER 04.indd 81 31-01-2023 18:45:53

3. Bond used for making elastic grinding wheel is

   a. Vitrified b. Silicate

   c. Shellac d. Resinoid

4. The grip with which the bond holds the abrasives is known as

   a. Grain size

   b. Grade of the grinding wheel

   c. Structure of the grinding wheel

   d. Type of abrasive

PART II

Answer the following questions in one or two sentences

3 Marks

5. What is meant by grinding?
6. Name any four types of grinding machines.
7. What are the four types of surface grinders?
8. List out any four operations performed in a grinding machine.
9. Mention any four types of bonds used in grinding wheel.
10. What is meant by "glazing"?
11. What is meant by "Loading" in a grinding wheel?
12. What are the reasons for chattering?
13. What is meant by "grit" of the grinding wheel?
14. What is meant by "Grade" of the grinding wheel?
14. Define Structure of the grinding wheel

PART III

Answer the following questions in about a page

5 Marks

15. List out the various types of non-precision and precision grinding machines.
16. A grinding wheel is specified as follows WA46K5V17. Explain the meaning of each symbol.
17. Explain with neat sketch of "Truing of a grinding wheel".
18. Explain "Dressing" of a grinding wheel with a diagram.

PART IV

Answer the following Questions in detail.

10 Marks

19. Sketch and explain important parts of an external cylindrical grinder.
20. Sketch and explain a surface grinder.
21. Explain 'mounting' of a grinding wheel with a suitable diagram.

XII BME_English version CHAPTER 04.indd 82 31-01-2023 18:45:54

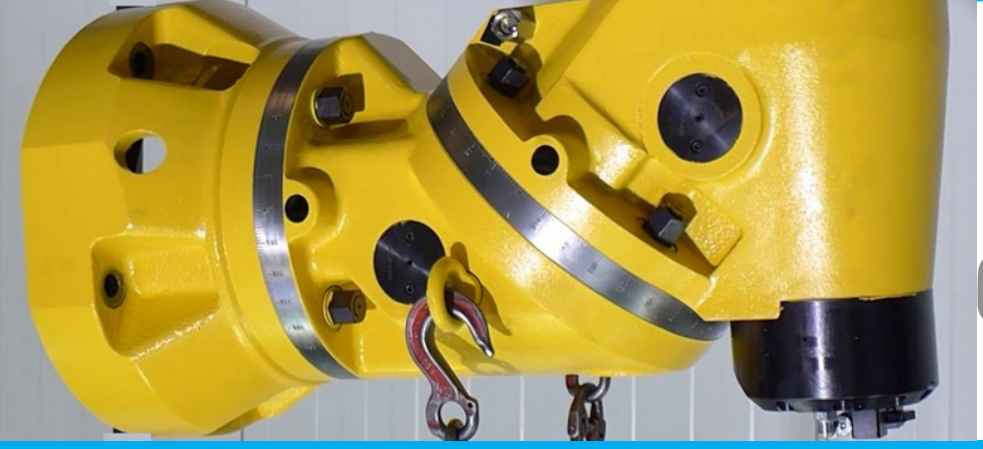

CHAPTER 05

MILLING MACHINE

Learning Objective

- Students to understand the various types of grinding machines, different typesof operation performed in it, Natural and Artificial abrasives and its type, manufacturing of grinding wheel and mounting of grinding wheel, dressing and truing grinding wheels.

CONTENTS

5.1 Introduction
5.2 Process of Machining
5.3 Horizantal Milling Machining
5.4 Vertical Machining
5.5 Types of Milling Machining
5.6 Differences between Plain Milling Machine and Universal Milling Machine
5.7 Size of Milling Machine Machine
5.8 Fundamental of Milling
5.9 Work Holding Diveces
5.10 Cutter Holding Diveces
5.11 Isometric View of Milling Cutters
5.12 Standard Milling Cutters and Its Application

5.1 Introduction

Milling machine is found in shops where tools and cutters are manufactured. The surface obtained by this machine tool is superior in quality and more accurate and precise. Eli Whitney designed a complete milling machine in 1818. In the year 1861 Joseph Brown, a member of Brown and Sharp Company developed the first universal milling machine.

Advantages

- The metal is removed at a faster rate as the cutter has got multiple cutting edges and rotates at a higher speed.
- It is possible to perform machining by mounting more than one cutter at a time.
- The table of the machine can be moved to an accuracy of 0.02 mm.

- It is very useful since various cutters and precise tools can be machined.
- Special attachments can be mounted on the machine to perform operations that are performed in other machine tools.

Disavantages

- The cost of the milling machine is high.
- As milling cutters cost high, the investment for procuring tools is more.
- The production cost will increase if we carry out the operations performed in a shaper or a drilling machine with a milling machine.

5.2 Process of Machining

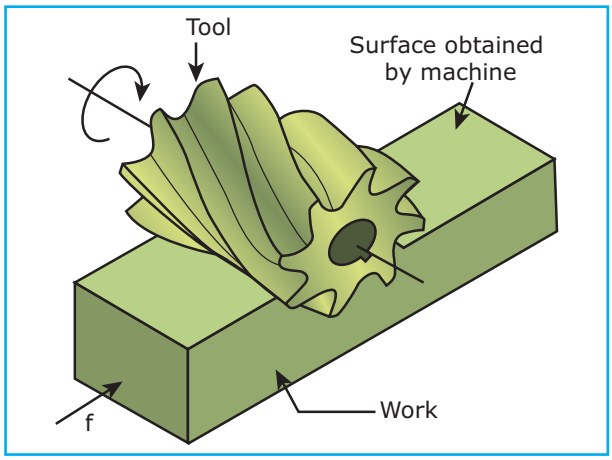

Milling is a process of removing metal by feeding the work against a rotating multipoint cutter. The machine tool intended for this purpose is known as milling machine.

5.3. Horizantal Milling Machining

Base

It is made of cast iron and supports all the other parts of the machine tool. A vertical column is mounted upon the base. In some machines, the base serves as a reservoir for cutting fluid.

Column

It is mounted upon the base and it is box shaped. It houses the mechanism for providing drive for the spindle. The front vertical face of the column is machined accurately to form dovetail guide ways for the knee to move up and down. The top of the column holds an overhanging arm.

Knee

It slides up and down on the guide ways of the column. An elevating screw mounted on the base obtains this movement. Saddle is mounted upon the knee and moves in a crosswise direction.

Saddle

It is mounted on the guideways of the knee and moves towards or away from the face of the column. This movement can be obtained either by power or by hand. The top of the saddle has guideways for the table movement.

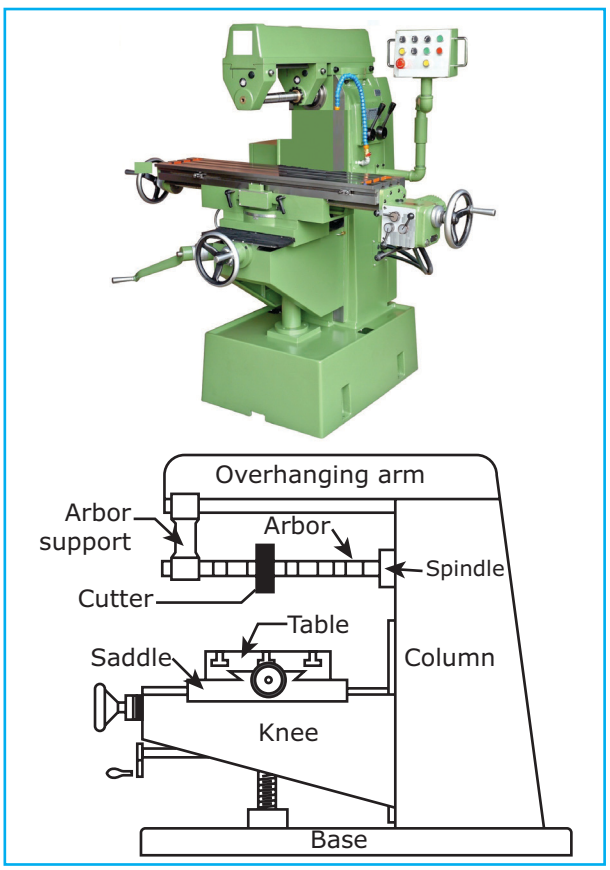

Horizontal Milling Machine

Table

The table is moved longitudinally either by power or manually on the guideways of the saddle. Top of the table is accurately machined and T-slots are cut for holding the work and other special fixtures on it. Trip dogs is fixed on the side of the table for controlling the movement of the table. The table of a universal milling machine can be swivelled horizontally to perform helical works.

Spindle

It is located in the upper part of the column. It receives power from the motor through belt, gears and clutches. The front end of the spindle has got a taper hole into which the cutters are held with different cutter holding devices.

Overarm

It supports the arbor from the top of the column. The arbor is supported by the bearing fitted within the arbor support. It is also useful while using some special attachments.

Arbor

It supports the different types of cutters used in the machine. It is drawn into the taper hole of the spindle by a draw bolt. One or more cutters are mounted on the arbor by placing spacing collars between them. The arbor is supported by an arbor support. The arbor is provided with a morse taper or self-releasing taper. A column and knee type milling machine is illustrated in fig.

5.4 Vertical Machining

It is very similar to a horizontal milling machine in construction as it has the same parts of base, column, knee, saddle and table. The spindle of the machine is positioned vertically. The cutters are mounted on the spindle is rotated by the power obtained from the mechanism placed inside the column. Angular surfaces are machined by swivelling the spindle head.

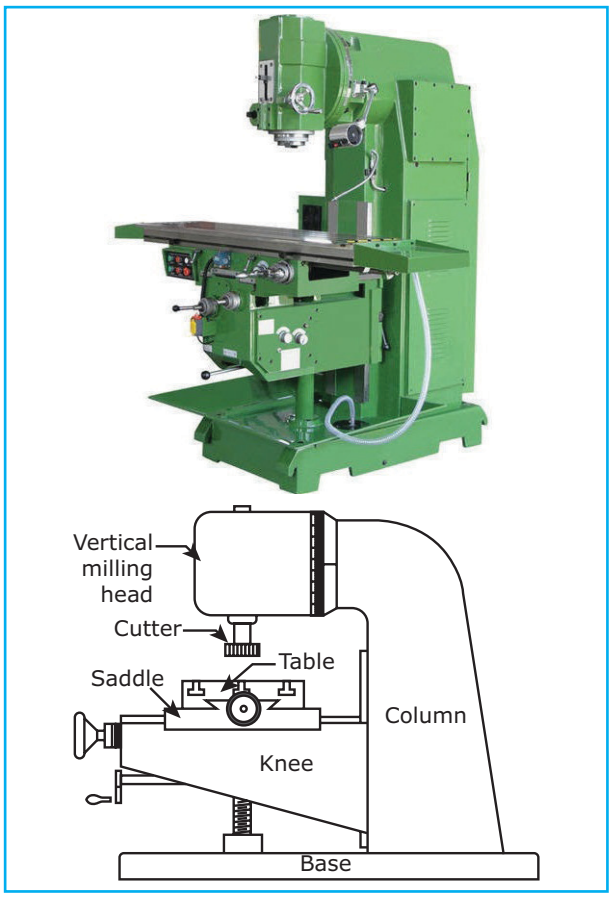

Vertical milling machine

5.5 Types of Milling Machining

The milling machines are classified according to the general deign of the machine.

1. Column and knee type
   a. Plain milling machine
   b. Universal milling machine
   c. Omniversal milling Machine
   d. Vertical milling machine
2. Table types milling machine
3. Planer type milling machine
4. Special type milling machine

Column ands Knee type Milling Machine

Column and Knee type milling machine is most commonly used. In this type of machine the coloum is mounted vertically upon the base. The column is accurately machined guideways on its front face. Knee is mounted on this coloum. The knee is designed to move up and down accurately. Saddle and table are mounted on the knee.

There are different types of column and knee type machines.

a. Plain milling machine

It is rigid and sturdy. Heavy workpieces are mounted and machined on the machine. The work mounted on the table is moved vertically, longitudinally and crosswise against the rotating cutter. The table cannot be rotated. It is also called as horizontal milling machine because the cutter rotates in horizontal plane.

b. Universal milling machine

The table of a universal milling machine can be swivelled by 45° on either side and so helical milling works can be performed. It is named so because it can be adapted for a very wide range of milling operations.

Various milling attachments like index head, vertical milling head, slot milling head and rotary table can be mounted. It can be machine drills reamers, gears, milling cutters with a very high degree of accuracy and so it finds an important place in workshop.

c. Omniversal milling machine

In addition to the table movement obtained in a universal milling machine, the knee can be tilted to a required angle and it may be fed in a longitudinal direction horizontally. It is useful for machining helical grooves, reamer and bevel gears. It is mostly used in tool room work.

d. Vertical milling machine

A spindle of a vertical milling machine is positioned at right angles to the table. The cutter is moved vertically or at an angle by swivelling the vertical head of the machine.

The machine is adapted for machining slots and flat surfaces by moving the table. By mounting end mills and face milling cutters on the spindle, vertical milling and internal milling are preformed.

5.6 Differences between Plain Milling Machine and Universal Milling Machine

S.No.	Plain milling machine	Universal milling machine
1.	The table can be moved vertically, longitudinally and crosswise.	Apart from the three movements of a plain milling machine. It can be swivelled about 45^0.
2.	Helical milling works cannot be done as the table cannot be swivelled.	The table can be swivelled and helical milling and spiral milling can be performed.

3.	As there are no special attachments, operations like gear cutting, slotting and vertical milling operation cannot be performed.	Special attachments like indexing head, rotary table, vertical milling attachment, slotting head are available with this machine.
4.	It is more rigid and suitable for machining on heavy and large workpiece and for simple milling operations.	It is meant for light workpieces, a wide range of operations can be performed in this machine. It is mainly used in tool rooms.
5.	The cost is less.	It is very costly.

5.7 Size of Milling Machine Machine

The size of a milling machine is specified as follows

1. The size of the table (Length and width)
2. The maximum lengths of longitudinal, cross and vertical travel of the table.
3. Number of spindle speeds, number of feeds.
4. Spindle nose taper
5. Power required
6. Nett weight of the machine
7. The floor space required
8. Type of the machine

5.8 Fundamental of Milling

The various milling process may be grouped under two headings

1. Peripheral milling
2. Face milling

Peripheral milling

The machining is performed by the cutting edges on the periphery of the milling cutter. It is classified under two headings.

1. Up milling
2. Down milling.

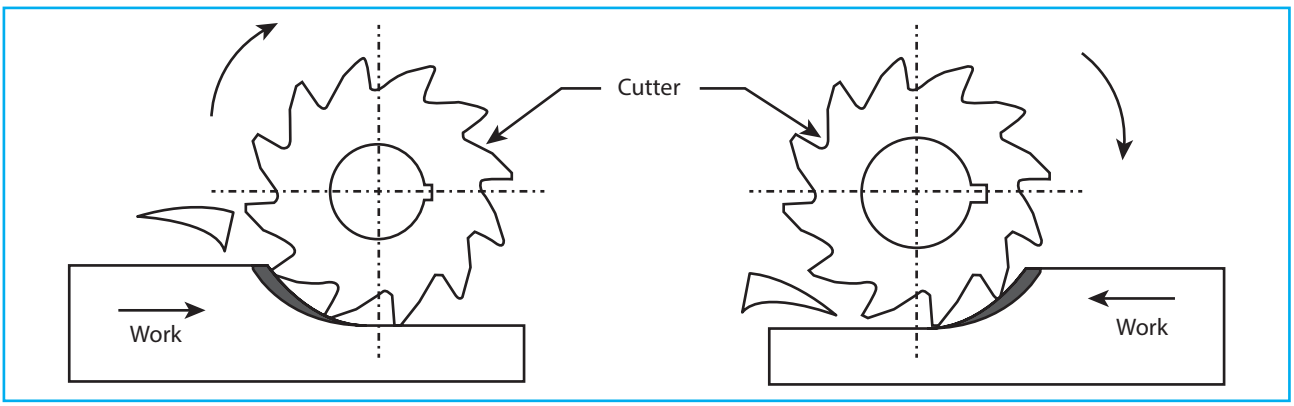

Up Milling Down Milling

Differences between Up Milling and Down Milling

S.No.	Up Milling	Down Milling
1	Work piece mounted on the table is fed against the direction of rotation of the milling cutter.	The work piece mounted on the table is fed in the same directions as that of the rotation of the milling cutter
2	Cutting force is minimum during the beginning of the cut and maximum at the end of cut.	Cutting force is maximum during the beginning of the cut and minimum at the end of cut
3	Thickness of chip is more at the end of the cut.	Thickness of chip is more at the begining of the cut.
4	The cutting force of the teeth is upward. So, it will try to lift the work piece from the fixture.	The cutting force of the teeth press the work piece downward. So, it helps holding of the work piece firmly.
5	The fixture design is difficult	The fixture design is simple
6	Applying the coolant at the cutting edge is difficult.	Applying the coolant at the cutting edge is effectively applied.
7	The chips accumulate at the cutting zone. So chips interfere with the cutting action.	The chips disposed off from the cutting zone. So chips donot interfere with the cutting action.
8	The chip removal is difficult	The chip removal is easy
9	The machined surface is not very smooth	The machined surface is smooth
10	Up milling is also called conventional milling	Down milling is also called non-conventional milling

Face milling

During face milling, the machining is performed by the peripheral cutting edges. The surface obtained by the processes is perpendicular to the axis of rotation of the cutter.

End milling

End milling is a process of the machining by milling cutters which have cutting edges both on the end face and on the periphery.

5.9 Work Holding Diveces

For effective machining operations, the workpieces need to be properly and securely held on the machine table. The following are the usual methods of holding work on the table. Large and

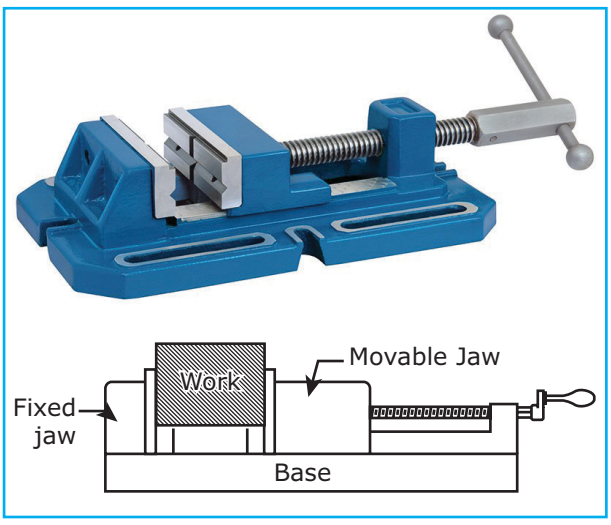

Plain Vise

irregular shaped workpieces are held on the milling machine table by 'T' –bolts and clamps. 'V' – blocks are used for holding cylindrical workpieces on the machine table in which key ways and flat surfaces are to be machined. Angle plates are used to support the work when surfaces are to be milled at right angles to another machined surfaces.

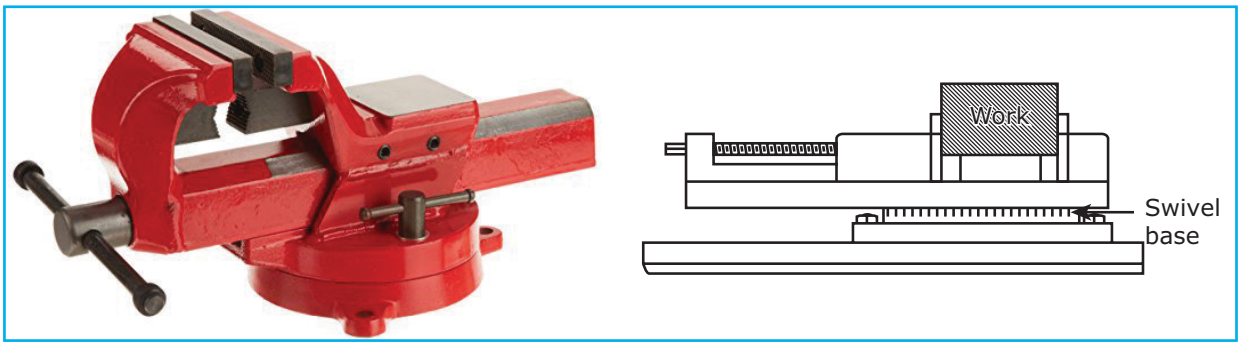

Swivel Vise

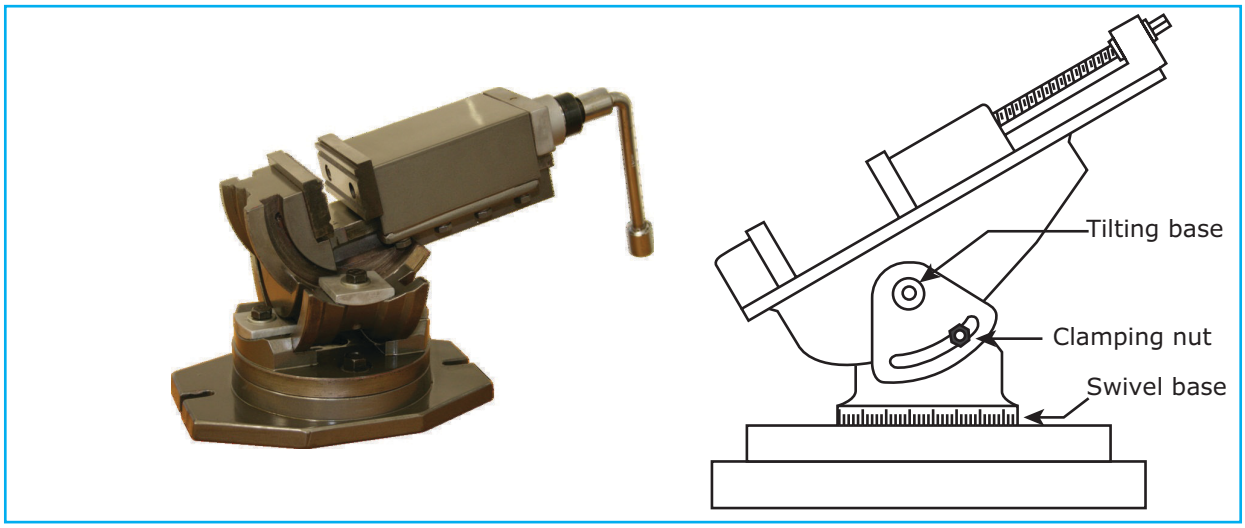

Universal Vise

Vises are commonly used for holding work on the table due to its quick loading and unloading arrangement. There are mainly three types of vises namely plain vise, swivel vise and universal vise.

Milling fixtures are useful when large numbers of identical workpieces are to be machined workpieces are held easily, quickly and accurately by milling fixtures.

5.10 Cutter Holding Diveces

Depending on the structure of the cutter there are several methods of holding milling cutters on the machine spindle.

1. Arbor
2. Collet
3. Adapter
4. Screwed on cutters

Arbor

Milling cutters with central holes are mounted and keyed on a shaft called arbor. There are three different types of arbor namely 1. Pilot end arbor, 2. Plain arbor and 3. Stub arbor.

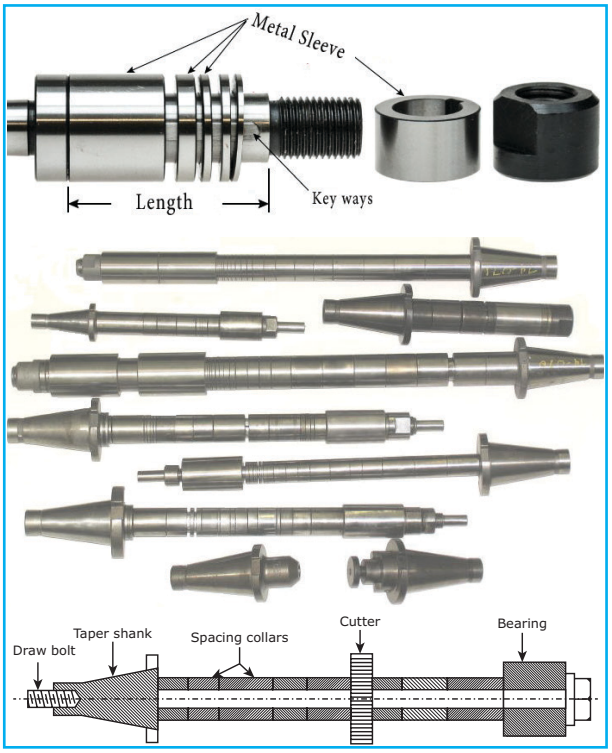

The arbors are made with taper shanks for correct alignment with the machine spindle the left side of the arbor is threaded internally to receive a draw bolt. This draw bolt connects the arbor with the spindle.

A long key way is cut on the entire length of the arbor. Cutters are mounted at desired positions on the arbor by placing spacing collars between them. The spindle rotation is transmitted to the arbor and the cutter is rotated. An arbor is illustrated in figure

Collet

Collet is used for holding straight shank milling cutters, End milling cutters and woodruff key cutters. The front portion of the collet is tapered and the portion is split into three jaws. A special nut fits over the jaws. The straight shank of the milling cutters is inserted between the jaws. When the nut is tightened the split jaws of the collet held the cutter tightly. The rear end of the collet has a taper shank. The taper shank is fitted into the spindle nose by draw bolt.

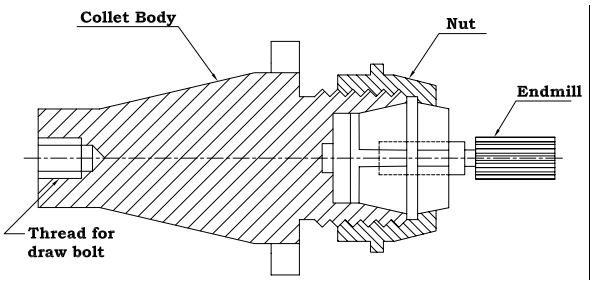

Collet

Adapters

If the taper shank of the cutter is smaller than the spindle nose, the adapter is used. The front portion of the adapter has a taper bore to receive the taper shank of the cutter. The rear end of the adapter has a taper shank. The taper shank is fitted into the spindle nose by draw bolt.

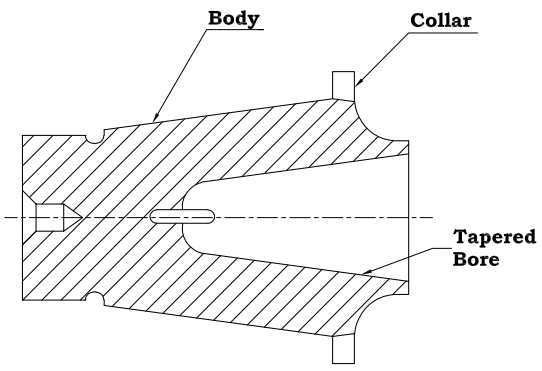

Adapter

Screwed arbor

The small cutters having threaded holes at the center are held by screwed arbors. It has a threaded nose at one end and adapters shank at the other end the shank of the arbor is mounted on the spindle.

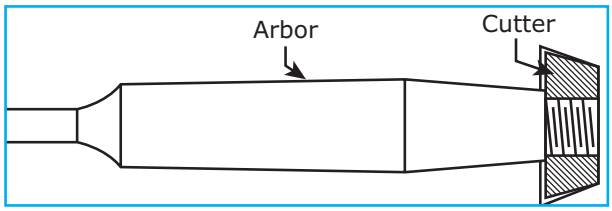

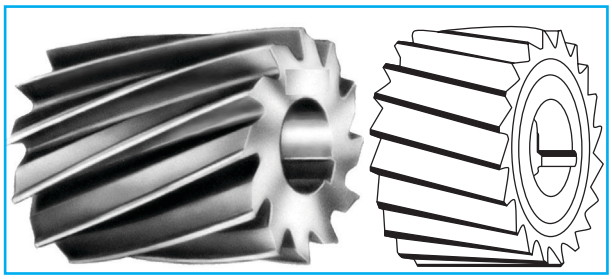

Isometric view of milling cutters

5.11 Isometric View of Milling Cutters

Milling cutters are multipoint cutters. These cutters are used to remove excess material of given job by milling.

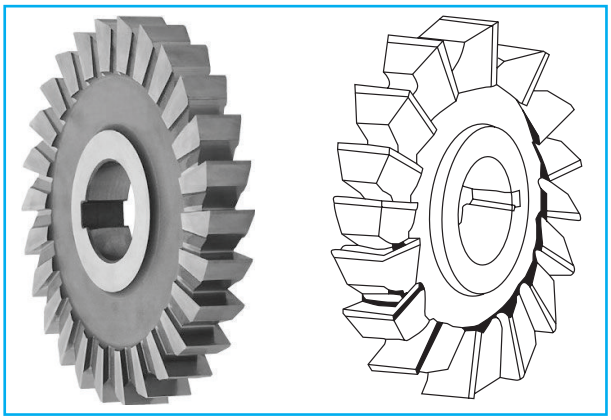

Milling cutters

5.12 Standard Milling Cutters and Its Application

S.No.	Name of the milling cutters	Structure of the cuttrer	Applications
1.	Plain milling cutter 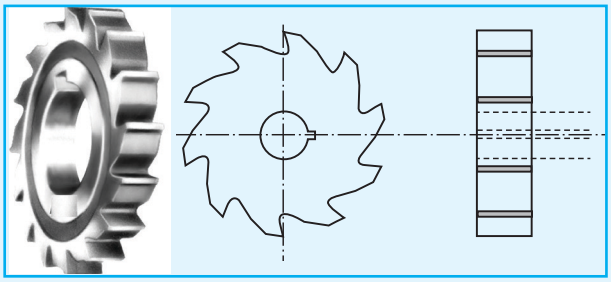	1.It is cylindrical in shape. 2. tooth on the circumferential surface only. 3.The teeth may be either parallel or helical to the axis	To produce flat and horizontal surfaces.
2.	Slitting saw 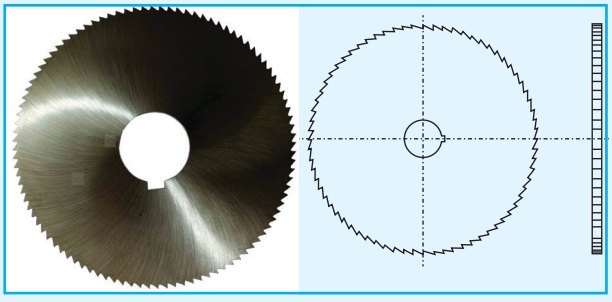	1. It is very thin milling cutter. 2. Its tooth are parallel to the axis	To produce narrow slots. Parting the metals.

3.	Side and Face Milling Cutter 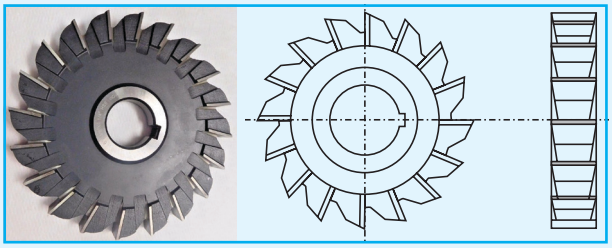	The cutting edges on periphery and also on one or both side of the teeth.	To produce slots, grooves
4.	End mill Cutters 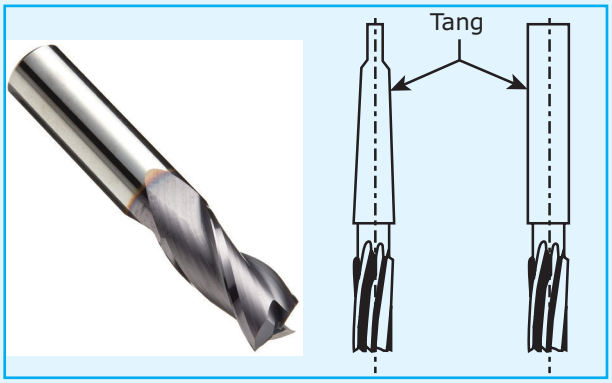	It has cutting teeth on the end as well as on the periphery. It has straight or tapper shank.	To produce narrow slots, grooves and key ways.
5.	Angle Milling Cutters 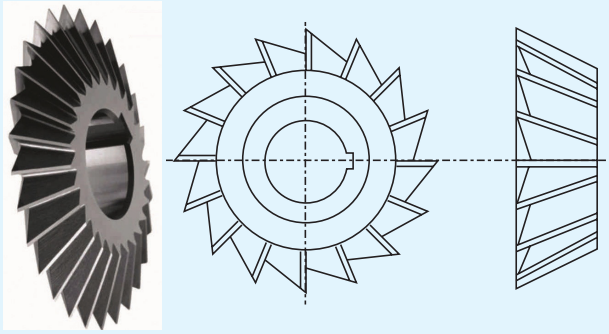	The cutting teeth is inclained. It has single or double angles. Cutters are available in standard angle.	To produce angular surface. It cuts 'V"-grooves, Reamer teeth, cutters teeth, etc.
6.	Form cutter 	The shape of the cutter teeth corresponds to the surface profile required.	To produce irregular contours surface, like convex and concave surfaces. Gear cutting are some examples

7.	'T' – Slot milling cutter 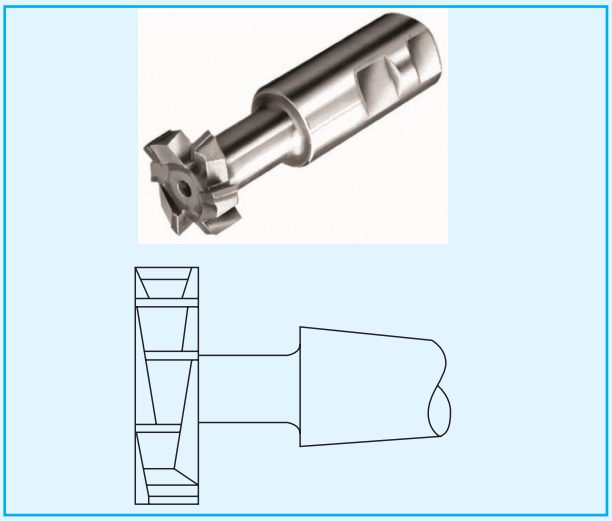	The teeth are cut on the periphery as well as on both side of the cutter. It is a special form of cutter.	To produce "T"-Slots.

ACTIVITIES

1. To arrange the students visit nearby industry and demonstrate the milling machine construction details and various kinds of operations.

QUESTIONS

Part I.

Choose the correct option **1 Mark**

1. Milling machine was developed by
   a. Henry Maudslay
   b. Eli Whitney
   c. James Nasmith
   d. Michael Faraday

2. In a milling machine, cutters are mounted on
   a. Column
   b. Table
   c. Over hanging arm
   d. Arbor

3. The distance of table-travel is controlled by
   a. Saddle
   b. Trip dogs
   c. Cross Feed Rod
   d. Vertical feed Rod

4. The tool used for cutting reamer teeth
   a. Slitting saw
   b. End mill Cutters
   c. Angle Milling Cutters
   d. Form cutter

5. The cutter used for cutting grooves and key ways

   a. Slitting saw

   b. End mill Cutters

   c. Angle Milling Cutters

   d. Form cutter

Part II.

Answer the following questions in one or two sentences 3 Marks

6. What is milling?
7. Name the fundamental milling process?
8. What are the types of peripheral milling?
9. Name any three work holding devices in a milling machine?
10. What are several methods of holding milling cutters on the machine spindle?
11. Write three different types of arbor.
12. When will you use the Collet in milling machine?
13. What is the use of plain milling cutter?
14. What is the use of side and face milling cutter?
15. What is the use of angular milling cutter?

Part III.

Answer the following questions in about a page 5 Marks

16. What are the differences between a plain milling machine and a universal milling machine?
17. What are the types of milling machine?
18. List out various types of milling cutters.

Part IV.

Answer the following Questions in detail. 10 Marks

19. Draw a neat diagram of a milling machine and explain its construction.
20. What are the differences between a up milling and a down milling?
21. Explain any two cutter holding devices with diagram.
22. Draw any two types of milling cutters and explain their structure and application.

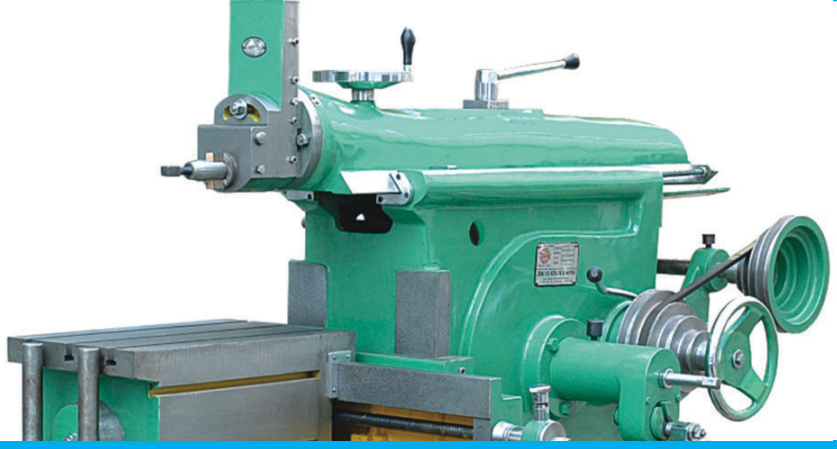

CHAPTER 06

MACHINE TOOL MAINTANANCE

LGOYS

Learning Objective

- Students to understand the following maintenance of machine tools.
- To avoid the repair of machines, instruments, and machine parts.
- By using the maintenance tools, how to operate the machines.
- To increase the duration of life of the machines.

CONTENTS

6.1. Introduction
6.2. Purpose of Maintenance
6.3. Tear and wear
6.4. Backlash
6.5. Lubrication
6.6. Central maintenance department
6.7. Types of maintenance
6.8 Instruments needed for maintenance

6.1 Introduction

"Prevention is better than cure". With reference to this proverb, the task performed to make the machine tools work perfectly is called 'Maintenance'. This is achieved by ensuring that machine tools cutting tools and measuring instruments function properly without any fault

6.2 Purpose of maintenance

The primary objective of the maintenance department is to ensure the machine tools, instruments, tools and accessories in good working condition. It is also necessary to ensure safety to both the machine tools and the operator. The accuracy and efficiency of the machine

tools and the instruments are also to be maintained properly. By performing maintenance, we can avoid accidents inside the workshop and increase the production capacity.

All the machine tools are driven by electrical motors. It is necessary that the switches, fuse, the connections and other controls should be in order. Care should also be taken to keep in good conditions. The parts used for transmitting power from the motor, gears, chain drive, belt drive etc.

The rotating shafts of the machine tools are fitted with bearings and suitably supported by different types of brackets. As bearings are precision parts, we have to apply grease or any lubricating oil at recommended intervals to keep them in good operating conditions. The sliding parts of various machine tools should be maintained cleanly without any dirt on them. The metal chips should be cleaned at regular intervals.

The moving and rotating parts should be properly lubricated at the brackets where they are fitted.

The coolant pumps, filter elements, pipelines and valves should always be in good working condition.



Spanner was invented by Solymen Merrick in 1835.



Solymen Merrick

The tools, accessories, special attachments and measuring instruments should be in good working conditions and be placed in their respective places.





6.3 Wear and tear

Due to continuous working of a machine tool and the nature of work performed on it, wear and tear is observed in the sliding parts of machine tools. As a result of this, the accuracy of the products is affected. In remedy, it is necessary to repair the said machine tools. The affected parts are to be replaced if necessary.

6.4 Backlash

Some slackness is observed in holding of parts, meshing gears or bolt and nut assembly. This slackness is known as backlash. If the amount of backlash is more in the case of mating gears, they should be replaced. The wear and tear

on the gears should be observed once in a week time.

6.5 Lubrication

Rotating and sliding parts, which make contact with other parts, are subjected to wear due to friction. Viscous oil called lubricant is applied to these parts to avoid direct contact between them. The process of reducing friction is called lubrication.

Applying oil or grease to the axle shaft of the bullock cart and the cycle wheel, gearbox of automobiles, motor shafts of pumps, fans and sewing machine are some examples of lubrication.

Friction occurs as the shafts are rotating and the sliding parts moving on each other. It generates heat and the parts get damaged.

In order to keep the machine tools accurate and durable, it is necessary to apply lubricants between mating parts. It will reduce friction and wear is minimized.

Lubrication is the nerve centre of machine tool. As it is blood circulation for the human body, lubrication is for the machine tools.

6.5.1 Important machine parts for lubrication

- Mechanisms of hydraulic systems
- Guideways and sliding parts
- Rotating shafts
- Gear box
- Feed Box
- Speed changing mechanisms
- Bearings

6.5.2 Purpose of lubrication

Smooth functioning of sliding movable parts

- To reduce friction and consequent wear
- To remove burrs and dust
- To reduce the heat generated due to friction
- To prevent rust formation on precise parts
- To provide cushioning effect to the load shocks
- For hydraulic circuits to transmit power

6.5.3 Types of lubricant

The materials used for reducing wear between moving and sliding parts are called lubricants. Though there are many types of lubricants available, oil and grease are mostly used

Grease

Grease is manufactured with the ingredients of soap and mineral oils. Different types of grease are manufactured for specific applications under different commercial names. So, it is necessary to know the specific type of grease to be applied for the specific part.

6.5.4 Types of Lubrication

The different types of lubrication are

- Ring lubrication
- Wick Lubrication
- Splash Lubrication
- Grease Lubrication

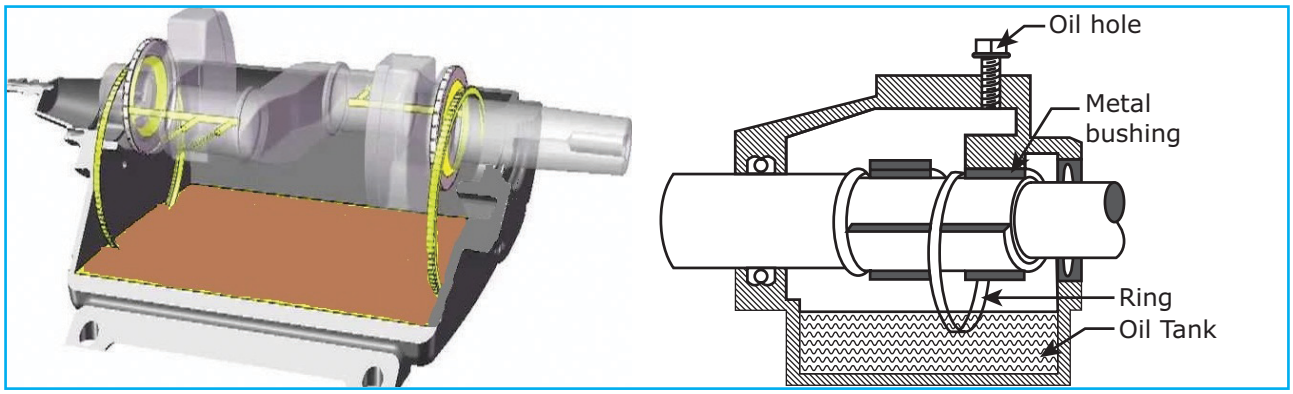

Ring Lubrication

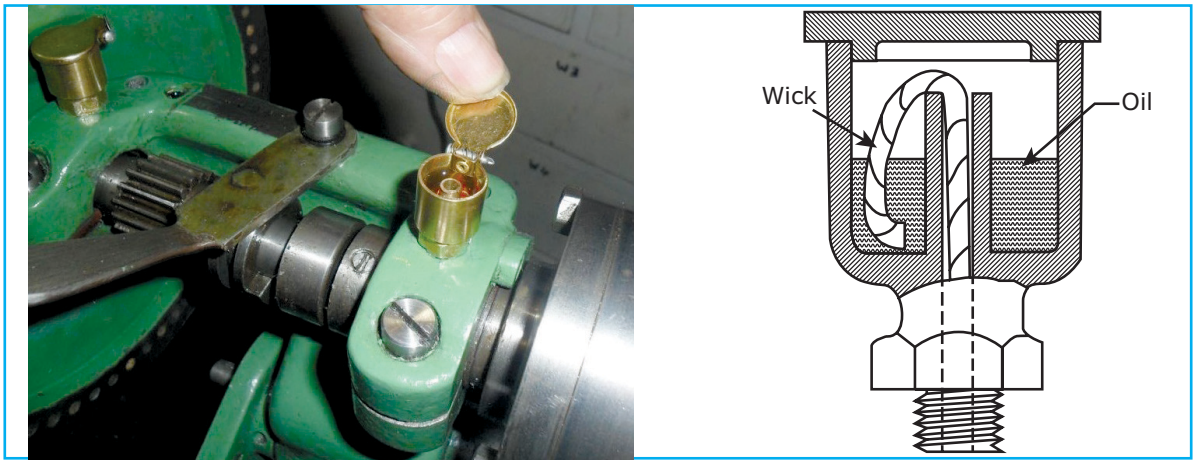

Wick Lubrication

Ring Lubrication

The method of lubrication involves a ring hanging from down the rotatingshaft. The bottom portion of the ring is immersed in the oil container. When the shaft starts rotating, the ring also rotates. While the ring rotates, it carries a small amount of oil and the oil is spread into the bearing and the shaft.

Wick lubrication

Wick lubrication is a method in which the wick along with a flexible thin piece of metal is used. A container having oil is placed above the bearing. The wick connects the container and the part to be lubricated. This lubrication enables the oil to flow from the container to the required place.

Splash lubrication

The rotating part of the machine itself is made to be immersed in the oil container. When the part starts rotating, the oil is splashed and the moving parts are lubricated. Bearings are generally lubricated by this method. Little spoons are attached to the rotating parts to get more quantity of oil to the part to be lubricated.

Grease lubrication

Grease lubrication is done with the help of grease guns. Another way of doing it simply is so fill a container with grease and the container is connected to the parts to be lubricated by means of a small tube. When a screw is screwed into the

container, a good amount of grease is taken to the required place container.

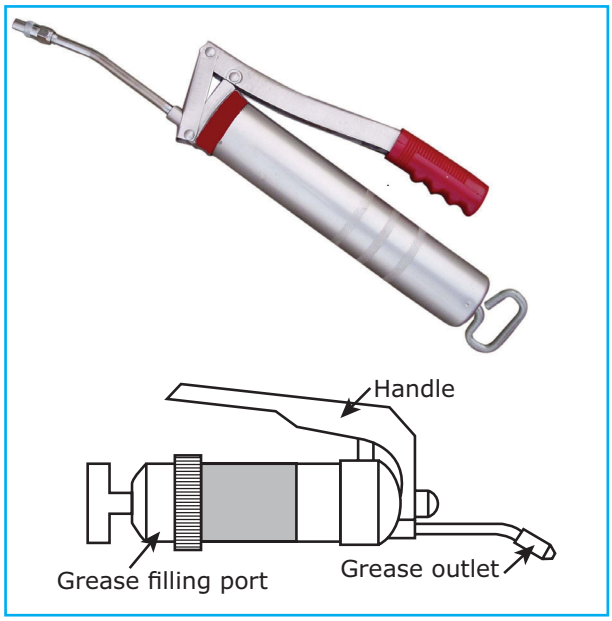

Grease gun

Lubrication oil and grease are manufactured under several trade names by the Indian oil companies. Suitable lubricants are used for specific purposes

6.6 Central Maintanance Department

The primary aim of maintenance department is to ensure the machine tools, instruments, tools and accessories in good working conditions. More maintenance attention is needed when the work load increases. If the machines are maintained properly, we can lookout for more production.

Separate maintenance department will be functioning in major machine shops and industries. Experienced engineers, supervisors, technicians will be working in this department. Separate equipments and instruments will be used in the department.

6.7 Types of Maintenance

There are different types of maintenance and they are

- Routine maintenance
- Daily maintenance
- Weekly maintenance
- Preventive maintenance
- Breakdown maintenance
- Capital repairs or Corrective maintenance

6.7.1 Routine Maintenance

Routine maintenance is done to avoid unnecessary breakdown of machine tools. It involves regular works like cleaning and lubricating, making minor adjustments and doing small repair works.

It is important to chart out what are all to be done, daily, weekly and monthly.

6.7.2. Daily Maintanance

- Cleaning all the parts of the machine tool.
- Lubricating the movable parts with grease and oil as per requirements.
- To correct the machine tool to make it operate accurately.
- To look at whether the coolant apply and auto lubricating equipments are working properly.
- To remove the burrs cleanly.

6.7.3 Weekly Maintanance

The measuring instruments, gauges and hand tools are checked and corrected if necessary.

- The spare parts and integral parts of the machine tools should be cleaned.

- The entire workshop premises should be maintained cleanly.
- Grinding wheels of bench grinders and tool and cutter grinders should be dressed. The work rests of these machines should be adjusted properly.
- The protective devices in the machine tool are checked whether they are properly fixed. And they are corrected if necessary.
- The cables and electrical connections should be checked.
- The position and working of belt, chain etc., are checked and adjusted.
- Parts like gears, clutches and bearings are checked for their proper functioning.
- The accuracy of precision measuring instruments are checked and corrected. They are also checked for zero error.

6.7.4 Preventive Maintanance

In order to avoid sudden breakdown of machine tools and maintenance programme is charted out. This will ensure that there is no slip in the rate of production. In case of any major breakdown to the machine tool, two types of losses are incurred to the management.

1. Direct losses
2. Indirect losses

Direct loss is the expenditure incurred for repairing the machine tools and getting them back in action.

Indirect losses happen by the loss of income for the disturbed production. The management has to pay the labourers their wages. It will also be earning a bad name due to non-deliverance of the products to its customers. So, it is necessary to plan the preventive maintenance program to avoid such losses.

Even if the machine tools are working in proper conditions, it is better to stop production once in a while to make the necessary repairs and adjustments. Certain parts should be replaced if necessary.

6.7.5 Breakdown Maintanance

Even after enforcing routine maintenance and preventive maintenance, there are chances that some machine parts may fail due to some reason or other. In order to bring back the machine to its original working condition, some minor or major repairs are needed to be done. This type of maintenance is known as breakdown maintenance.

6.7.6 Capital Repairs or Corrective Maintanance

Even if the machine is functioning properly, it is necessary to halt the functioning of the machine to do some major repair once in a year. To do that, the machines parts are to be dissembled completely and worn out parts are replaced. Some parts of the machine may be in a condition that they need to be replaced soon. To correct all such difficulties, the machine is stopped from functioning to do all and every repairs to bring back the machine to accurate machining conditions. This is called as capital repairs (or) corrective maintenance .

6.7.8 Planned Maintanance Programme

The main objective of planned maintenance programme is to increase the production by keeping the machine

tools always ready in good condition. It is done by keeping the machine tools to perform all the activities correctly with the required accuracy at desired speed with full safety protection.

The planned maintenance programme is to be prepared and executed as follows.

1. When a new machine tool arrives to the machine shop or the existing machine tools are to be replaced, it is required to install the machine tools properly, level and align them correctly and connect them to the electrical terminals safely.
2. If errors are found in the dimensional accuracy, the errors should be recorded and analysed whether the machine is in bad condition.
3. It is necessary to plan and get ready the materials, spares and tools required for the maintenance in advance so that the maintenance work is carried out in time.
4. The operators and supervisors should know the importance of the cutting speed, feed data of the machine tools.
5. Emergency repair works should be done without any delay in the case of breakdown of any of the machine tools.
6. The machine should be overhauled if the working efficiency of the machine tool goes below a particular level.
7. The machine tools become very old and not performing to the desired level, it has to be dismantled completely and worn out parts should be replaced to bring it to the normal working condition.
8. The following details should be prepared and made as charts the layout plan of the shop, the size and specification of the machine tools and the parts to be lubricated. The manuals and the list of spare parts of all the machine tools are also to be kept ready.
9. Annual budget for the maintenance work should be prepared atleast six month or once in year in advance.

6.8 Instruments needed For Maintanance

1. Steel rule
2. Try-square
3. Calipers
4. Micrometer
5. Vernier Calipers
6. Gauges
7. Vise
8. Files
9. Tap & Die
10. Screw gauges
11. Spanner set
12. Hammers
13. Screw drivers
14. Wrenches
15. Hacksaw frame & blades
16. Lubricating devices
17. Emery sheets
18. Scraper

ACTIVITIES

1. Students to visit the industry and workshops nearby school, to observe how to maintenance of machines and tools.
2. To give exercises to tabulate the tools and instruments for different types of machines.

QUESTIONS

Part – I

Choose the correct option

(1 Mark)

1. Maintenance done once in a year is known as _____
   a. Routine maintenance
   b. Preventive maintenance
   c. Breakdown maintenance
   d. Corrective maintenance
2. Daily maintenance is _____
   a. Routine maintenance
   b. Preventive maintenance
   c. Breakdown maintenance
   d. Corrective maintenance
3. Maintenance of belt, bearing and chain is
   a. Daily maintenance
   b. Weekly maintenance
   c. Preventive maintenance
   d. Corrective maintenance

Part II

Answer the following questions in one or two sentence

(3 Marks)

4. Define "Maintenance".
5. What is the objective of maintenance?
6. What do you mean by "Wear"?
7. Define backlash.
8. What is lubrication?
9. Name the different types of lubrication
10. What are the types of maintenance?

Part – III

Answer the following questions in about a page.

(5 Marks)

11. Explain the "Lubrication".
12. What are the parts to be lubricated?
13. Explain "Ring Lubrication" with a diagram
14. Explain wick lubrication with a neat sketch.
15. Explain splash lubrication.
16. Sketch and explain "Grease Lubrication".
17. Explain Routine Maintenance.
18. Explain corrective maintenance.

Part – IV

Answer the following Question in details

(10 Marks)

19. Explain any two types of lubrication with diagram.
20. Explain "Preventive Maintenance".
21. Explain "Break Maintenance".
22. Explain "Planned Maintenance Program".



CHAPTER 07

WELDING

OITQ5

Learning Objectives

- Students understand the process of welding and its uses, types of welding used in industries.
- To know about various field of using welding nowadays.

CONTENTS

7.1 Introduction
7.2 Process of welding
7.3 Types of welding process
7.4 Arc. Welding
7.5 Gas welding
7.6 Difference between Arc welding and Gas welding
7.7 Welding Related processes.
7.8 Types of welding joint
7.9 Safety precautions for welding

7.1 Introduction

Welding can be defined as the process of joining two metal parts by applying heat. In industry, welding process is primarily used for fabricating works.

Welding is useful in making permanent joints. It can be performed by applying or not applying pressure. The contours of the metal parts are molten to make the joint in some methods. In some types of welding processes, filler metal is used. In some other methods, filler metal is not used.





The Inventor of Arc welding is Sir Humbry David, by using two carbon electrodes and he find the flame between the rods.

Gas welding was invented by Nicole Benar Dass, Russian scientist by using oxygen Acetylene gas and found high flame which is used to connect two metals.

7.2 Process of Welding

The process of welding finds application in manufacturing automobiles, Aeroplans, rail coaches, machine components, metal structures, boilers and ships. Generally, welding process is applied wherever metal works are performed.

There are two types of welding as follows

1. Plastic welding
2. Fusion welding

Plastic Welding

In this type, the metal parts are heated to plastic state. In this stage. Pressure is applied to make a perfect joint. It is also known as pressure welding.

Fusion Welding

The metal parts are heated up to the point of melting in this type. The joint is made at this stage and the parts are allowed to cool. On cooling, the molten metal forms a solid joint. No pressure is applied in this method. Hence, it is also known as pressureless welding or Fusion welding Arc welding and gas welding fall in this category.

7.3 Types of Welding Process

1. Arc welding
   a. Carbon arc welding
   b. Metal Arc welding
   c. Metal inert gas welding
   d. Tungsten inert gas welding
   e. Atomic hydrogen welding
   f. Plasma arc welding
   g. Submerged welding
   h. Electro slag welding
2. Gas Welding
   a. Oxy – acetylene welding
   b. Air – acetylene welding
   c. Oxy hydrogen welding
3. Welding related processes
   a. Oxy – acetylene cutting
   b. Arc cutting
   c. Hard facing
   d. Brazing
   e. Soldering

7.4 Arc Welding

In arc welding, the edges of two metal parts aremelted by an electric arc and the joint is made.An electrode made of a suitable metal is utilized for this purpose. The electrode is taken closer to the parts to be joined and electric current is supplied to both the parts and the electrode. An electric arc is made between the electrode and the metal parts. This arc generates high temperature and melts the metal parts. The parts are joined at this molten state. The filler metal in the form of electrode is deposited along the joint. The metal parts are joined without

the application of any pressure. Electrical energy is converted into heat energy in arc welding.





The distance between the metal parts and the electrode should be around 3mm. The heat generated during arc welding ranges from 5000^{0}C to 6000^0 C. A generator or a transformer supplies the required current to both the electrode and the metal parts. The electrodes are flux coated to prevent the molten metal from reacting with the atmosphere.

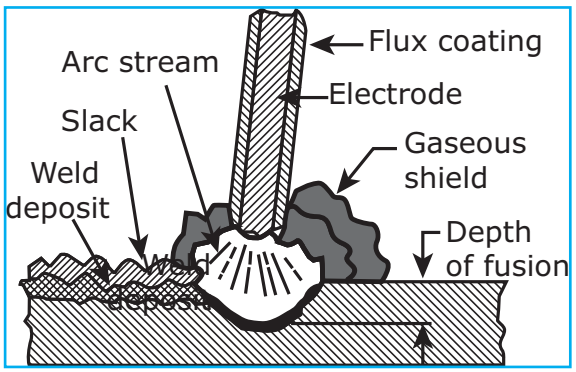

Arc welding

7.4.1 Arc Welding Equipments

The following equipment's are used for the process of arc welding

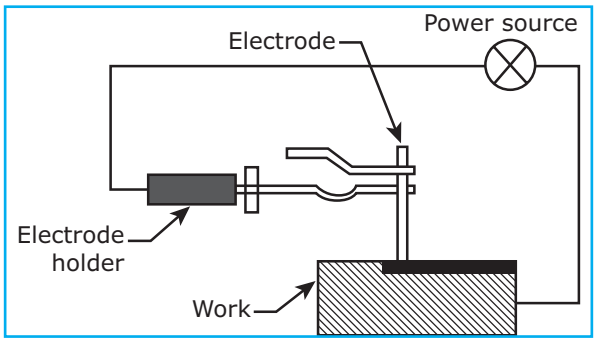

Arc welding equipments

1. D.C welding generator (or) AC transformer
2. Cables
3. Electrode cable
4. Work cable
5. Electrode holder
6. Electrode
7. Gloves
8. Protective shield (or) Goggles
9. Apron for the operator
10. Wire brush
11. Chipping hammer

7.4.2 Specification of Electrodes

Generally, the size of the electrodes is specified by the length and its diameter. They are available to a maximum of 12 mm diameter and 45cm length. The size of the electrode increases with the current used. In manual welding, the size of the electrode changes according to the thickness of the metal parts. Spring like electrodes are used in automatic welding.

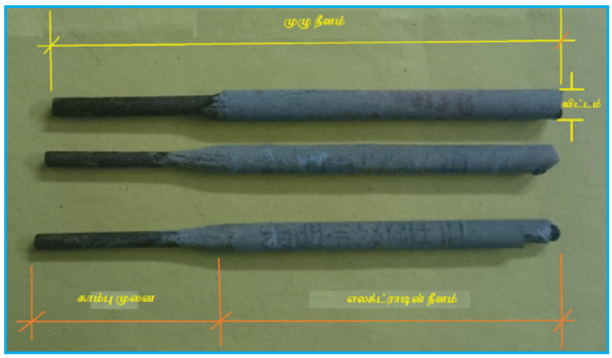

Electrodes

7.4.3 Types of Electrode

The electrodes used in arc welding are two types

1. Consumable electrode
2. Non – consumable electrode

There are three types of consumable electrodes. They are

1. Bare electrodes
2. Lightly coated electrodes
3. Heavily coated electrodes

Non – consumable electrodes are used in the processes of atomic hydrogen welding and TIG welding.

7.4.4 Selection of Electrode

The material used for manufacturing electrodes depends upon the material to be welded. Given is the list indicating suitable materials for manufacturing electrodes for welding different metals.

S. No	Material to be welded	Electrode material
1	Wrought iron	Low Carbon Steel Rod
2	Mild Steel	Mild Steel, Copper coated Rod
3	Alloy Steel	Nickel Steel Rod
4	Cast Iron	Cast Iron Rod
5	Aluminium	Cast Aluminium Alloy Rod
6	Carbon Steel	Steel wire (0.15% Carbon & 0.025%) Phosperous & Sulphur
7	Copper	Copper Rod
8	Brass	Brass Rod

7.5 Gas Welding

Gas welding is the process of melting and joining metal parts by means of a gas flame. Generally pressure is not applied during the process of gas welding. Oxygen and acetylene gases are made to pass through the welding torch. These gases are mixed at the required ratio at the torch and the tip of the welding torch is ignited to produce the flame. Because of the heat generated by the flame, the edges of the metal parts are melted. Filler rod provides the additional metal required for making the joint. The flux coated on the electrodes prevents oxidation and removes impurities. This method is suitable in welding metal parts of thickness varying from 2mm to 50mm. The temperature of the flame is around 3200^{0}C.

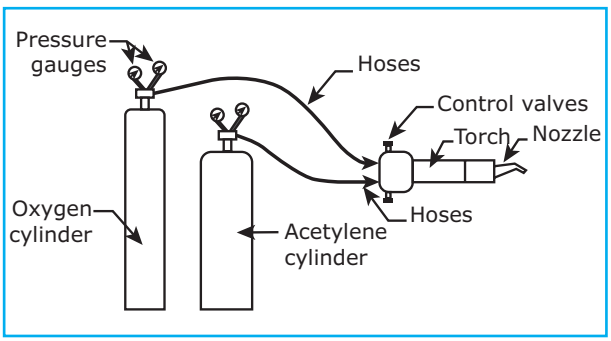

Gas Welding

Gas Welding Equipment's

The following equipment's are necessary for gas welding

1. Gas cylinders
2. Regulators
3. Pressure gauges
4. Rubber hoses
5. Welding torch
6. Safety goggles
7. Gloves
8. Spark lighter
9 Wire brush

Gas Cylinders

Oxygen and acetylene gases are stored in separate cylinders and used for gas welding. The colour of oxygen cylinder is black and the acetylene gas is stored in maroon cylinders. Oxygen is stored at a pressure of 125kg/cm^2. Acetylene gas is stored at a pressure of 16Kg/cm^2 in the cylinder.



Gas Cylinder

Regulators

Separate regulators are fitted on both the cylinders. A regulator is used to control the working pressure of the gases. The working pressures of oxygen is 1Kg/cm^2 and acetylene is 0.15Kg/cm^2. Working pressure of these gases are altered according to the thickness of the metal parts of the joint. Two pressure gauges are fitted each on the oxygen cylinder and on the acetylene cylinder. One of the pressure gauges indicates the pressure of the cylinder and the other gauge indicates the working pressure of the specific gas.



Regulators

Hoses

Separate hoses are used to connect the two cylinders with the welding torch through regulators. The colour of the hose from the oxygen cylinder is black and the one from the acetylene cylinder is red. These hoses carry the gases to the welding torch.



oxygen hose



acetylene hose

Welding Torch

Oxygen and acetylene reach the welding torch through the passages of hoses from the respective cylinders. These gases are mixed in the mixing chamber of the welding torch. Flame is produced at the tip of the torch when the gases are ignited. There are two control valves present in the torch to control the quantity of oxygen and acetylene. By this control, the grade of the flame can be altered. The size of the flame is altered to suit the thickness of the metal parts.

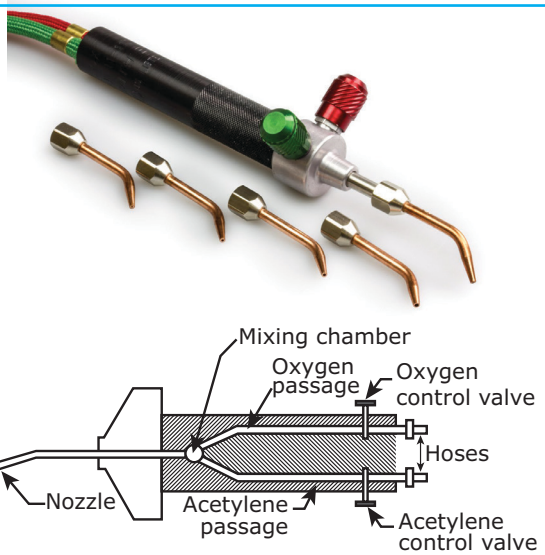

Welding Torch

Goggles

Oxy acetylene flame emits ultraviolet and infrared rays. These rays are highly harmful to bare eyes. In order to protect the eyes of the welder, goggles should be used by him.



Goggles

Welding Gloves

Protective hand gloves are used by the operator to prevent possible damages that may be caused by high temperatures and metal splashes during welding.



Gloves

Spark Lighter

Spark lighter is used to ignite the oxy-acetylene gas at the tip of the welding torch.



Spark Lighter

Wire Brush

Wire brushes are useful for cleaning the weld before and after the welding process.

7.5.1 Types of Gas Flames

The size of the flame can be altered by varying the ratio of oxygen and acetylene. By doing so, the following three types of flames are obtained.

1. Neutral flame
2. Carburising flame
3. Oxidising flame

Neutral Flame

The supply of equal quantities of oxygen and acetylene produces neutral flame. There are two zones in this flame

1. Sharp and bright inner cone
2. Bluish outer cone.

The temperature of the inner cone will be around 3200°C. This neutral flame is generally used as it will not cause any chemical reaction upon the heated metal.

Carburizing Flame

This flame is also known as reducing flame. The supply of acetylene will be more than oxygen to produce this flame. Carburizing flame consists of three zones namely,

1. Sharp inner cone
2. White intermediate cone
3. Bluish outer cone

Carburizing flame is useful in welding low carbon steel and alloy steels. It is also used to harden the outer surface of metal parts.

Oxidizing Flame

Oxidizing flame is obtained by supplying more oxygen than acetylene. It consists of two zones namely bright inner cone and outer cone. This flame is useful in welding brass and bronze.

7.5.2 Filler Rods used in Gas Welding

Filler rods used in gas welding supply the additional metal is making joints. These rods are melted by the gas flame and deposited over the parts of the joint. Generally the filler rods are made of the same metal as that of the parts of the joint.

The diameter of the filler rod depends upon the thickness of the parts to be welded. The strength of the welding joint is increased by adding Nickel or Chromium in filler rods. A thin coat of copper is provided on the filler rods to prevent the molten metal from reacting with atmospheric oxygen. Flux may be applied either in powdered form or liquid form.

7.5.3 Advantages of Gas Welding

1. Applied for different classes of work
2. Welding temperature is controlled easily
3. The quantity of filler metal added in the joint can easily be controlled
4. The cost of the welding unit is less
5. The cost of maintenance is less
6. Both welding and cutting can be done

7.5.4 Disadvantages of Gas Welding

1. Intended for welding thin work pieces only
2. The process of welding is slow
3. The time taken by the gas flame to heat the metal is more when compared with electric arc.
4. The strength of the joint is less
5. Great care should be taken in handling and storing gas cylinders.

7.6 Differences between Arc Welding and Gas Welding

Arc welding	Gas welding
The heat is generated by the electric arc	The required heat is provided by the gas flame.
The working temperature is about 4000^0C	The temperature of the gas flame is about 3200^0C
The filler rod is used as electrode.	Filler rod is used separately
Care should be taken against the dangers that may be caused because of electricity	The danger of the process is because of the gases at high pressure
The strength of the joint is more	The joint is not as strong as that of arc welding
Brazing and soldering cannot be performed by the electric arc.	The processes of brazing and soldering can be done with the gas flame.
The filler rod metal should be selected as the same metal as that of the parts of the joint.	The filler rod metal can be different from that of the parts of the joint.

7.7 Welding Related Processes

Following are some important welding related processes used in industries.

1. Oxy-acetylene cutting
2. Arc cutting
3. Hard facing
4. Soldering
5. Brazing

Oxy-Acetylene Cutting

Plates made of iron and steel are cut by oxygen, acetylene cutting torch. Oxygen and acetylene are mixed in the cutting torch and a gas flame is generated. The flame heats the sheets to bring them to red hot condition. High pressure oxygen is supplied on the red hot metal through a separate central hole of the cutting torch. Iron and steel sheets are thus cut by the jet of oxygen.

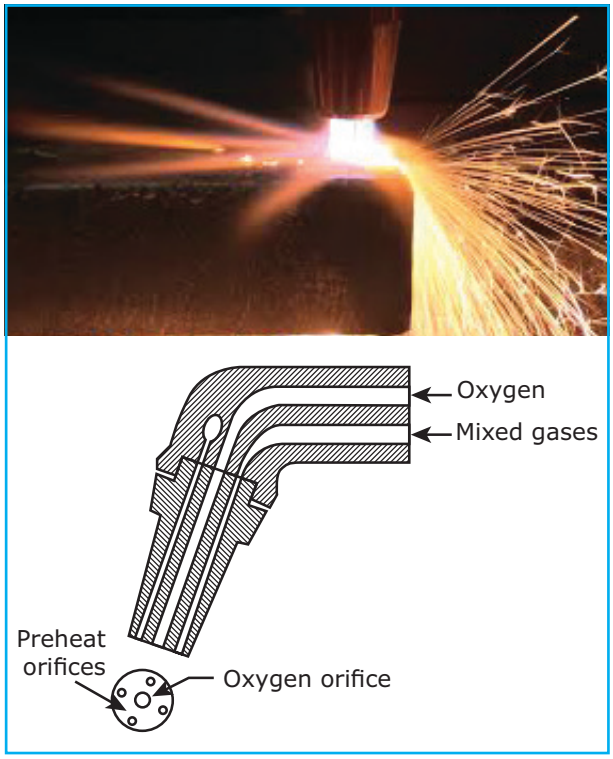

Oxy – Acetylene Cutting

Arc Cutting

In this process, the metal parts are heated by means of carbon or metal electrodes. High pressure air is supplied on the molten metal to remove it and cut the metal parts. Oxygen jet is supplied along with the electrode instead of air now a days. Arc cutting is not suitable for accurate work.

Hard Facing

Hard facing is a process of coating a hard material on soft metal parts. Powdered coating metal is filled in the welding gun. The metal powder is melted by the oxy-acetylene gas flame. The supply of inert gas at pressure makes the powdered metal to split into small particles. These particles are sprayed on the surfaces of the soft metal. Coatings of Tungsten carbide, Chromium carbide and Aluminium oxide can be made on the surfaces of different cutting tools and cutters.

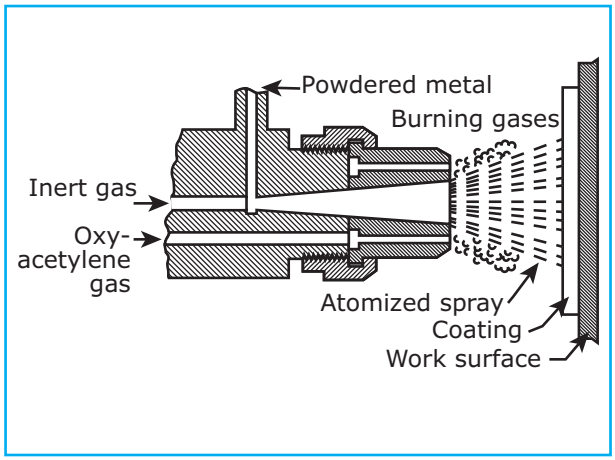

Hard facing

Soldering

Two parts made of similar or dissimilar metals are joined by a solder made of a fusible alloy. Solder is an alloy made of Tin and Lead. The melting temperature of the solder is in the range of 150°C to 350°C. The surfaces of the two metal parts are cleaned and held in correct positions. Flux paste made of zinc chloride is applied on the parts by soldering iron. Application of flux prevents oxidation. The solder is melted by the heat provided by the soldering iron and filled between the metal parts. The solder solidifies and joints the metal parts.

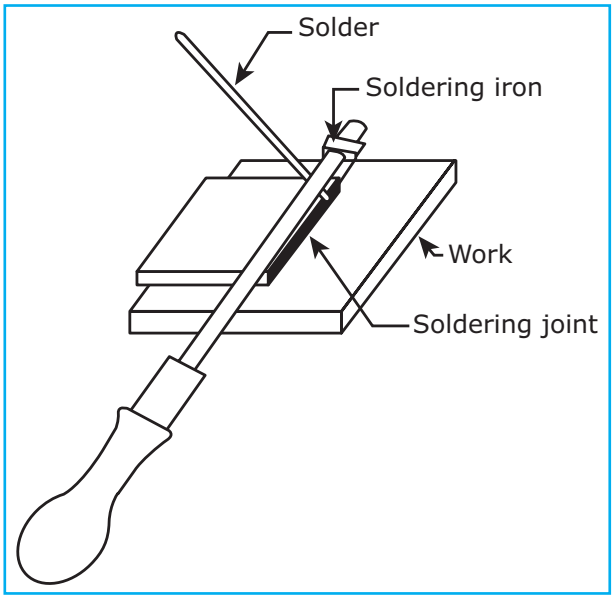

Soldering

Brazing

In brazing, filler metal in molten state is filled between the metal parts of the joint. The filler rod is heated up to 450° C. The parts to be joined are cleaned and the molten filler metal is applied between the parts to make the joint. In this method, the metal parts are not melted.

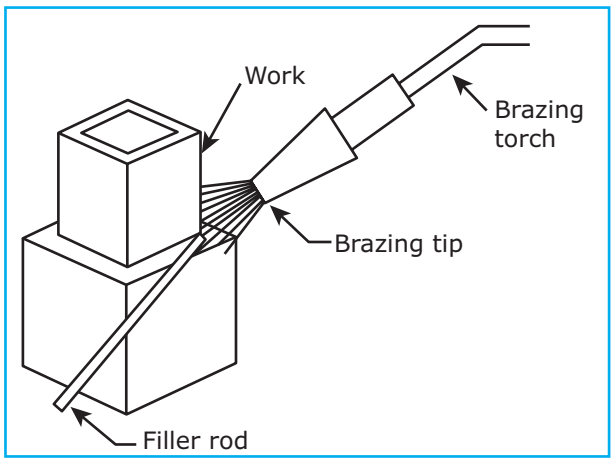

Brazing

7.8 Types of Welding Joints

Following are the various types of welded joints

1. Butt joint
2. Lap joint
3. T-joint
4. Corner joint
5. Flange joint

Butt Joint

Butt joint is a joint in which the corners or the edges of two metal parts are joined. The process is done by keeping the metal parts on a same plane. The edges of metal parts of thickness up to 5mm may be kept open square. If the thickness of the metal parts exceeds 5mm, edges of the parts need to be prepared in proper shape before welding.

Lap Joint

It is a joint in which the metal plates are placed over lapping before welding. The edge of one part is welded with the surface of the other plate. There are two types of lap joint namely (i) single lap joint and (ii) double lap joint.

T-Joint

This joint is made by keeping the metal plates at perpendicular (90^0) to each other. Sheets with thickness over 3mm only are welded by this type of joints.

Corner Joint

Two metal sheets kept at 90^0 to each other are welded by this joint. This method is adopted when making boxes and tanks. Corner joints are adopted for thin and thick sheets.

Flange Joint

The plates of the joint may be kept parallel or at 90^0 to each other. The edges of the plates are bent to form the shape of a flange.

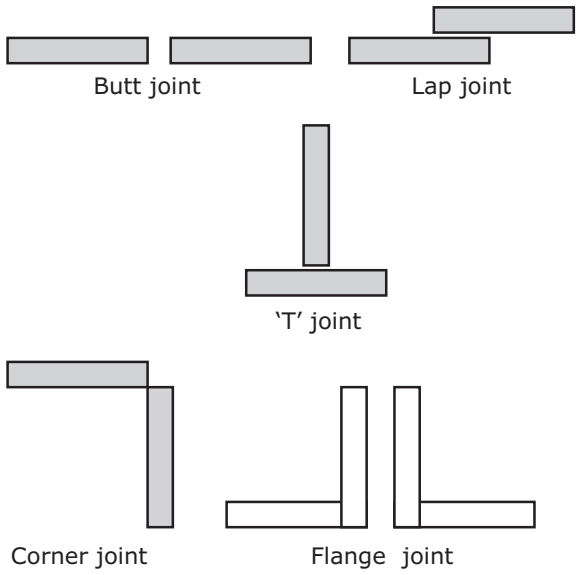

Type of welding Joints

7.9 Safety Precautions for Welding

We make use of electrical devices and inflammable gases like oxygen and acetylene in welding. If proper care is not shown in handling them, there is always a possibility of accidents taking place. So, welding process should be carried out with due safety and caution.

Safety Precautions for Gas Welding

1. Gas cylinders should be kept in ventilated locations.
2. Cylinders should not be kept near hot locations. They should be kept away from electrical terminals.
3. Pressure regulators should be closed after the welding work is completed.
4. Regulators should be handled properly.

5. Old and worn out regulators should be replaced immediately.
6. The operator should wear goggles, gloves, apron and proper foot wear.
7. Fire extinguishers and first – aid box should be kept ready always.

Safety Precautions for Arc Welding

1. The welder should always wear goggles, Gloves, apron and proper footwear during welding
2. Welding shop should be located properly, so that it does not cause any discomfort to others.
3. The welder should act carefully against electric shocks.
4. A high quality electrode holder should be put into use.
5. Power supply should be provided at required voltage and uniform current

Fire extinguishers and First – aid box should always be kept ready in a welding shop.

ACTIVITY

1. Students to visit the welding workshop to study different types of welding joints and give practice any two types of welding joints.

QUESTIONS

Part – I

Choose the correct option

(1 Mark)

1. The heat generated during Arc Welding is
   a. 100° C - 150° C
   b. 50° C - 100° C
   c. 5000° C - 6000° C
   d. 15° C - 200° C
2. The pressure of acetylene in the cylinder of gas welding equipments is
   a. 16kg/cm^2
   b. 125kg/cm^2
   c. 100kg/cm^2
   d. 14kg/cm^2
3. The pressure of oxygen in the cylinder of Gas Welding equipment is
   a. 16kg/cm^2
   b. 125kg/cm^2
   c. 100kg/cm^2
   d. 14kg/cm^2



4. Plastic Welding is
   a. Pressure Welding
   b. Resistance Welding
   c. Fusion Welding
   d. Arc. Welding
5. Fusion Welding is
   a. Pressure Welding
   b. Non – Pressure Welding
   c. Resistance Welding
   d. Thermit Welding

Part II

Answer the following questions in one or two sentence

(3 Marks)

6. Mention any three types of Arc-Welding.
7. State any three types of Gas Welding.
8. State any three type of Welding related process
9. How is the Welding Electrodes specified?
10. What are the types of electrodes?
11. Name of three types of flames generated in Gas Welding.
12. What are the types of Welded joints?

Part – III

Answer the following questions in about a page.

(5 Marks)

13. Explain any two types of equipments used in Gas Welding
14. Explain any one type flame obtained in Gas Welding with a diagram.
15. What are the advantages of gas Welding?
16. Explain the Oxy-Acetylene cutting with diagram.
17. Explain Hard-facing with diagram.
18. Explain Soldering with diagram.

Part – IV

Answer the following Question in details

(10 Marks)

19. Explain Arc Welding with diagram.
20. List out the Arc Welding equipments with a diagram
21. Explain Gas Welding with a neat sketch.
22. List out the differences between are and Gas Welding.
23. What are the safety precautions during the process of Gas and Arc Welding?



CHAPTER 08

CNC MACHINE

PMYQ6

Learning Objectives

- Students to know how the machines are controlled by numerical control.
- To know about the computer numerical control machines, its elements and functions of elements.
- To know about the Types of CNC machine in detail.
- To know about the programming for CNC machines.

CONTENTS

8.1. Introduction
8.2 Numerical control
8.3 Computer Numerical control
8.4 Elements of CNC machines.
8.5 Software
8.6 Input Media
8.7 Machine Control Unit
8.8 Driving devices
8.9 Machine tool.
8.10 Types of CNC machine.
8.11 Advantages and Disadvantages of CNC machines over conventional machine tools.
8.12 Difference between CNC machine and conventional machine
8.13 Programming for CNC machines.
8.14 Advancements in NC machines.

8.1 Introduction

Production is a process of converting raw material into finished products. The process of productions is achieved by the collective efforts of man and machine using materials and tools. It requires information and energy to accomplish production by machining. Over the period of time, several techniques and methods are used in the process.

The evolution of new methods of production shows the increasing involvement of machines in providing the information and energy required for production and the role played by the humans declined.

Prepared programs consisting of information and instructions took the role of controlling the machines instead of manual control. This has led to a manufacturing system of higher production at lower cost with more accuracy.

8.2 Numerical control

In NC system, intervention of human beings in the machining process is substituted by some operating instructions in a coded form. This coding, otherwise known as part program, is stored in cards or tapes. Getting the required instructions from these input media, the machine carries out different tasks in a proper sequence.

Numerical control can be defined as a system in which actions of a machine tool are controlled by recorded informations in the form of numerical data.

8.3 Computer Numerical control

When the activities of a numerical control machine is administered by a computer, it is known as computer numerical control machine tool. The functions of the machine tool are controlled by the instructions stored as programs in the computer.

8.4 Elements of CNC machines

As explained earlier, the NC system requires the preparation of part program based on the product drawing, preparation of input media (punched cards & punched tapes), the data entry into the control unit, consequent processing and actuation of the machine tool to produce the desired part.

To perform all the above operations the NC machine have the following Elements

1. Software
2. Machine control unit
3. Driving devices
4. Machine too

FLOW CHART

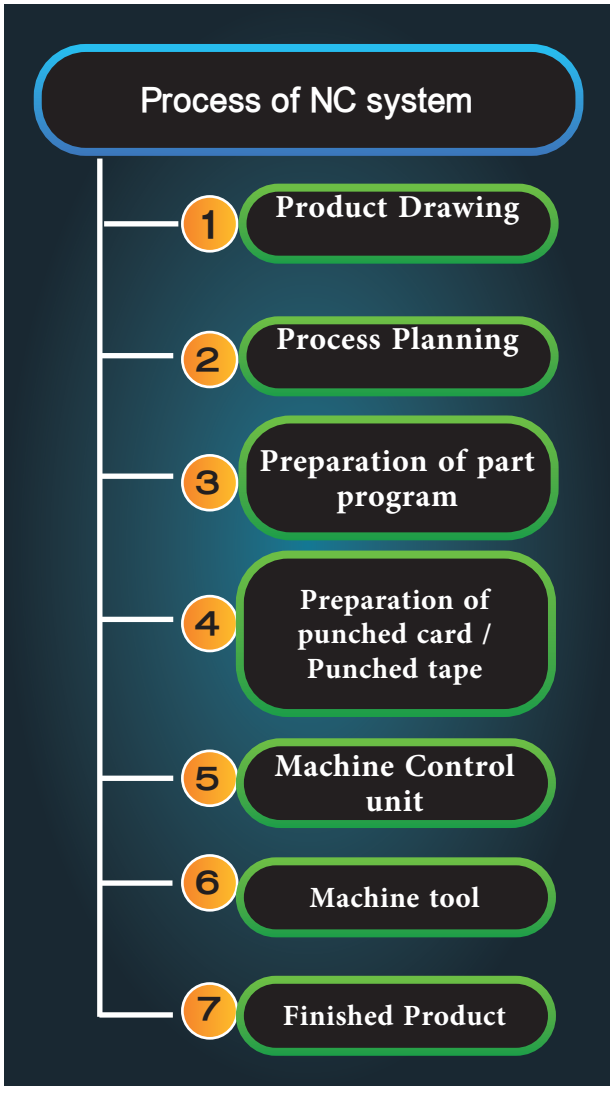

8.5 Software

Software of a NC system can be referred to items comprising of instructions (programs), computer languages used for write these programs and a variety of input media.

In order to provide informations into the control unit or a computer, binary format is used. In this system, only two digits 0 and 1 are used.

8.6 Input Media

Different types of input media are used to store informations and to provide input to various control units of the NCmachine. They are

1. Punched cards
2. Punched tapes
3. Magnetic tapes
4. Floppy disks

Punched cards and punched tapes are useful in storing data in the form a series of punched holes. Punched tapes may be made of paper, plastic or aluminium foils. Magnetic tapes are made of plastic material and coated with Gamma ferric oxide layer. Magnetic tapes may be used for storing more informations and it may erased and reused.

8.7 Machine control unit

Machine Control Unit consists of electronic circuits (hardware) that are useful in reading and interpreting the instructions (NC program) fed by means of input media and convert them into mechanical actions of the machine tool.

There are three types of MCU. They are

A. Inbuilt type

B. Swivel type

C. Stand alone type

Inbuilt MCU

When the control unit of the NC machineis mounted in the construction of the machine itself, it is known as Inbuilt MCU. Inbuilt MCU is shown in figure.

A. Inbuilt MCU

When the control unit of the NC machine is mounted in the construction of the machine itself, it is known as Inbuilt MCU. Inbuilt MCU is shown in figure.

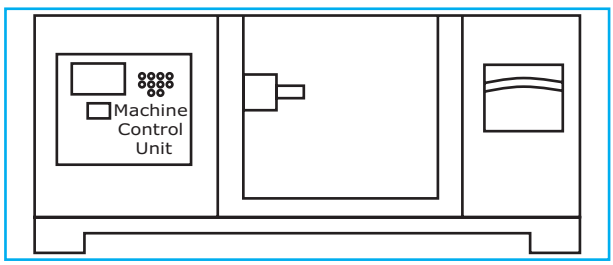

Inbuilt MCU

B. swivel MCU

The MCU is a separate unit and is connected to the machine by swinging arrangements. The MCU as a whole can be swing around the machine depending upon the position of the operator. Swivel MCU is shown in figure.

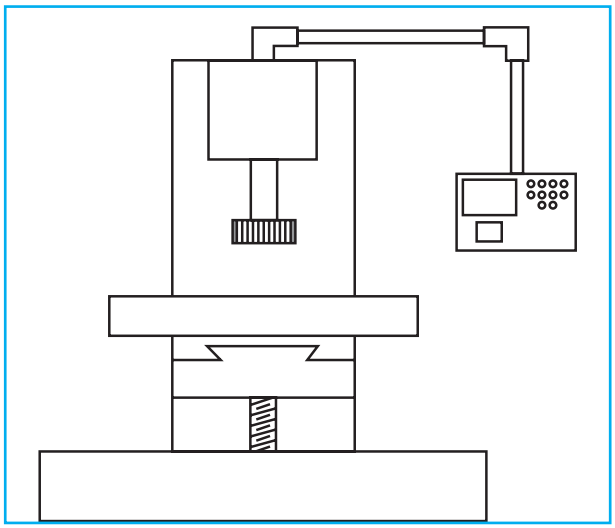

Swivel MCU

C. Stand alone MCU

Stand alone MCU is designed as a separate unit and placed at a distance from the machine. Stand alone MCU is shown in figure.

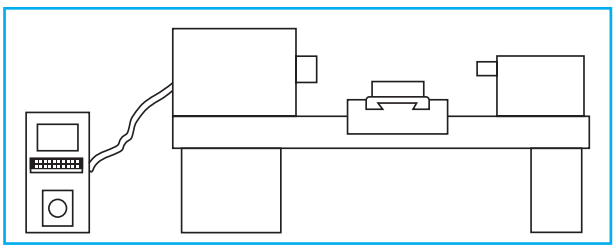

Stand Alone MCU

Elements of a machine control unit

A machine control unit consists of following elements

1. Input reading unit
2. Memory unit
3. Processing unit
4. Output unit
5. Feedback unit

Input Reading Unit

It is a electromagnetic device useful in reading the NC programs in the form of instructions.

The main functions of an input reading unit are

1. To accept the input media
2. To collect the input media instructions.
3. To send them into processing unit.
4. To keep the input media safety for reuse.

Memory Unit

The information received from input reading unit will be saved in memory unit. It will be send to processing unit, when it is required.

Processing Unit

The informations received from the memory unit are processed here and are given to various parts of the CNC machine. The processing unit serves as a link between the memory unit and output unit.

Integrated circuits (IC) are used here for processing.

Output Unit

The wires coming out of the processing unit are called output unit. This output unit emit electric pulses of low voltage. In order to drive various slides of the machines, the pulses are amplified by means of electronic or electro-magnetic amplifiers.

Feedback Unit

Feedback unit consists of some electrical or electronic hardware. This is used for converting physical quantities like displacement and velocity into electrical pulses.

FLOW CHART

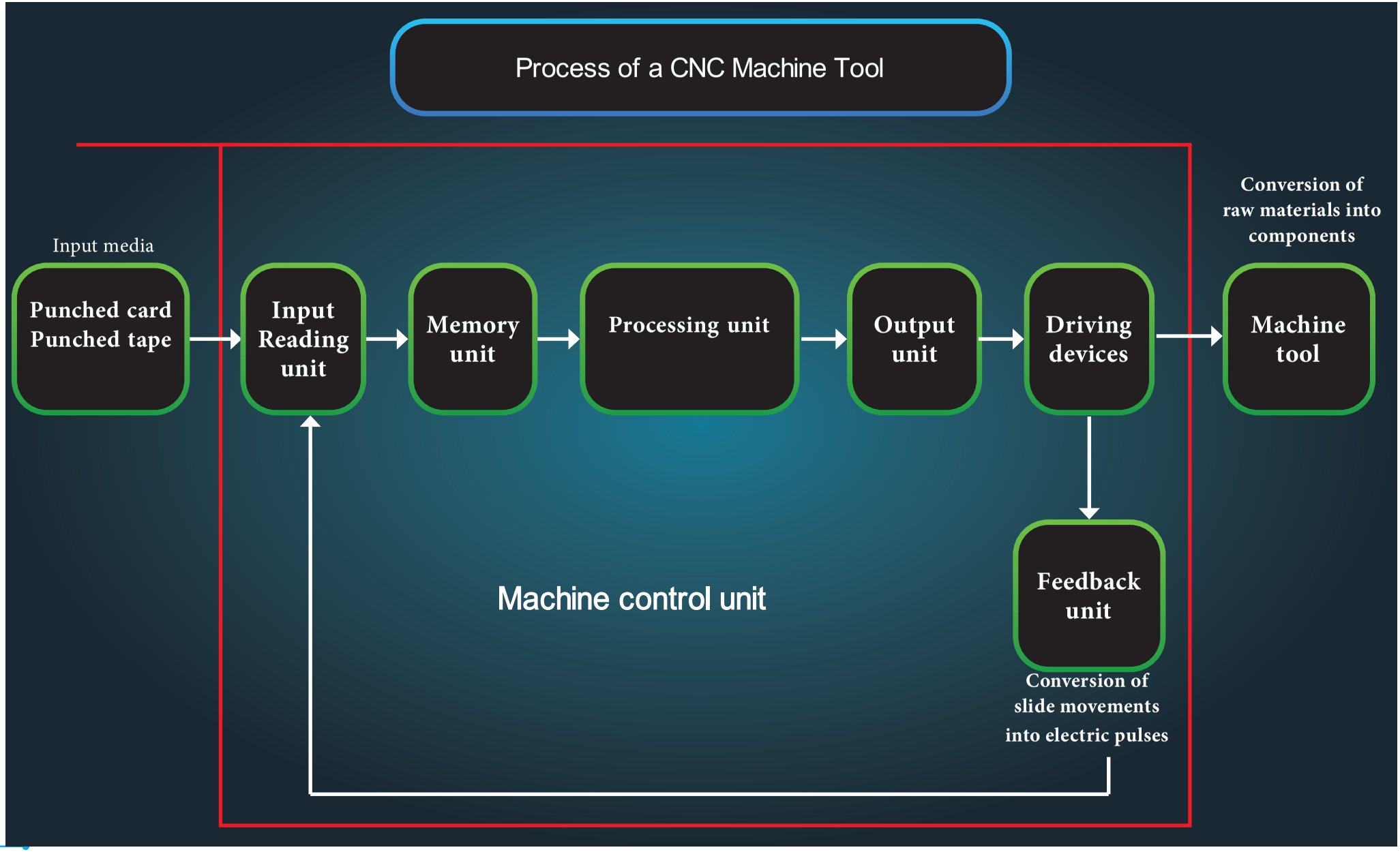
Process of a CNC Machine Tool
Input media
Punched card
Punched tape
Input Reading unit
Memory unit
Processing unit
Output unit
Driving devices
Machine tool
Conversion of raw materials into components
Machine control unit
Feedback unit
Conversion of slide movements into electric pulses

8.8 Driving Devices

Driving devices consist of different types of motors and gear trains. They convert the instructions from MCU, into accurate mechanical displacements of the machine tool slides.

Servomotor, stepper motor, synchros and resolver are different types of motors used as drives in NC machines

8.9 Machine tool

Machine tool is the machine which converts the raw materials into finished components. It is designed to perform various machining operations.

It consists of a machine table, spindles, cutting tools, work holding devices such as jigs and fixtures, coolant systems, swarf removal systems and other auxiliary equipments.

8.10 Types of CNC machine

1. CNC Lathe Machine
2. CNC Drilling Machine
3. CNC Grinding Machine
4. CNC Milling Machine
5. CNC Laser cutting Machine
6. CNC Plasma cutting machine
7. CNC Electric discharge machine
8. CNC Router Machine
9. CNC Automatic changing machine
10. CNC 5 – axis machine.

CNC Lathe Machine

A CNC Lathe machine is a machine tool where the material is held in place and rotated by the main spindle as the cutting tool that works on the material is mounted and moved on various axes. A simple CNC lathe operates on two axes with the cutting tool in a fixed position.

A CNC Lathe machine is normally used to produce precise round shapes with both an outer diameter and an Inner diameter.



CNC drilling machine

A CNC drilling machine is a machine tool that drills holes in a work piece using a rotating tool according to code sent by a computer.



These machines work with CNC software, which sends instructions to the drilling machine. The user inputs a computer Aided design (CAD) or Computer aided manufacturing (CAM) file into the computer program and the machine then drills according to the instructions sent by the software in the form of code.

CNC Grinding Machine

CNC Grinding machine is a machine tool which use a rotating grinding wheel to achieve material remove on a metallic work piece. CNC Grinding machines are mostly used for the grinding of workpieces where the surface quality is very high.



CNC Milling Machine

The CNC Milling machine combines the accuracy of computerized controls to rotate and position multi point cutting tools. Through the preprogramed machining operation, a tool moves along the three primary axes x, y and z to precisely cut away material.

CNC milling machines are especially suited for milling profiles, cavities, surface contours and die – cutting operations where two or three areas of the milling table must be controlled simultaneously.



8.11 Advantages and Disadvantage of CNC machines over conventional machine tool

Advantages of CNC machines over conventional machine tools.

1. The process of production, planning becomes easy.
2. The production of a single CNC machine is equivalent to production of many conventional machine tools. So the time is lesser.
3. As a single CNC machine is doing many machine functions, it is not necessary to buy many machines. It ensures reduction of floor space.
4. The time required for making input media is very less, when compared with making jigs and fixtures.
5. Smaller quantities of production is possible so keeping low raw material is enough
6. The design change of the component can be done easily and quickly
7. As the CNC machines require very little attention of the operator, the machine utilization is better
8. Jigs and fixtures are not used in CNC machines. It reduces the tooling costs.
9. In a single set up of tool and work piece, many operations are done. So the time is saved
10. Due to higher accuracy, it leads to better assembly and reduces fitting costs. The quality of the product also becomes better.

11. Operators errors are less, so wastage is also less
12. As a single operator can supervise several machines at a time, the labour cost is reduced.

Disadvantages of CNC machines over conventional machine tools.

1. The cost of CNC machine is higher
2. Skilled programmers are needed for CNC machine
3. Maintenance expenses are higher

8.12. Difference between CNC machine and conventional machine

S.No	CNC Machine	Conventional Machine
1.	CNC Machine is more efficient and requires less labor and provides cost savings for all jobs	Conventional Machine is less efficient and requires more labor and more cost
2.	In CNC machine, computer program is loaded through software, so the human error is minimised in quality of the product.	In this machine, the quality of the product is dependent on the skills and abilities of the machine operator.
3.	Since CNC Machine run on computer commands, it is easy to give higher quality for large quantities.	Due to manual operation in conventional machine, it is difficult to give higher quality for large quantities.
4.	In CNC Machine operators with little skill can produce highly quality parts	In conventional machine operators need more skill to produce highly quality products.
5.	In CNC machine, since minimum operator involvement is needed to manage the CNC process, a single operator can manage many machines at a time with high degrees of accuracy and precision.	Maximum operator involvement is necessary for this machine. A single operators can not manage many machines at a time.

8.13. Programming for CNC machines.

Based on the component drawing, a lot of information are need to be fed into the control unit for processing and machining. The informations include dimensions, shape, cutting speed, feed, depth of cut, sequence of operations, tool and work material. The said information should be fed into the machine control unit in an acceptable form. Preparation of the instructions in the above form is known as 'programming'.

8.14 Advancements in NC machines.

After the modern micro-processor based computers took control of the NC system, the technology in this field has grown tremendously.

Following are two major advancements of NC system.

1. Direct Numerical control(DNC)
2. Adaptive control(AC)

Direct Numerical control (DNC)

A manufacturing system in which several NC machines are connected to and controlled by a remotely located main frame computer is known as 'Direct Numerical Control' (DNC). The basic constituents are

a. Main frame computer
b. Bulk memory
c. Network system
d. NC machine tools

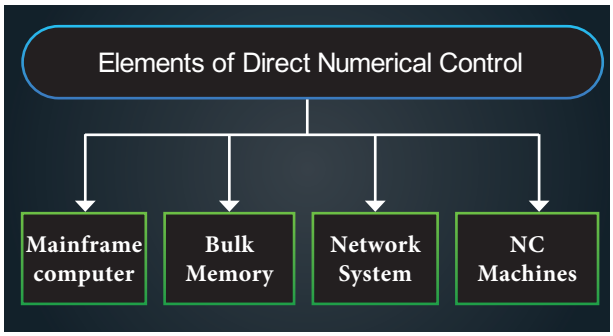

DNC system eliminates the need of separate machine control units, input media, this system governs the scheduling of work of all the NC machine tools. The required network system may be a LAN (Local Area Network) or WAN (Wide Area Network).

Adaptive control(AC)

During machining, cutting speed, feed and depth of cut are measured and compared with desired values.

If it is not so, it will adapted (modified), then it is called as "Adaptive control".

ACTIVITIES

1. Students to visit the polytechnic, Engineering colleges for showing the CNC machines and its functioning.

Questions

YETQ2

Part I

Choose the correct option

1 Mark

1. Production is achieved by
   a. man and machine
   b. materials and tools
   c. men, machine, materials and tools
   d. men and tools

2. In NC system the program instructions are given as,
   a. Information
   b. numerical data
   c. symbols
   d. thread symbols

3. IC refers to
   a. Information control
   b. Instruction control
   c. Internal control
   d. Integrated circuits

Part II

Answer the following questions in one or two sentences

3 Marks

4. Define "Numerical control".
5. What are the types of Machine control unit?
6. Mention any three types of elements in Machine control unit.
7. What are the functions of input reading unit?
8. What are the disadvantages of CNC machine?

Part III

Answer the following questions in about a page

5 Marks

9. Draw a flow – chart of NC system.
10. Explain "Input Media"
11. What are the types of CNC machine?
12. Explain with neat sketch any one types of Machine control unit.

Part IV

Answer the following Questions in detail.

10 Marks

13. Draw a flow-chart of "Process of a CNC machine Tool"
14. What are the differences between CNC machine and conventional machine?



CHAPTER 09

AUTOMATION AND ROBOTICS

Learning Objectives

- Students to know about, how the automatic machine is working without man,working principle and their automatic technology.
- Students to know about how the Robotic machine is working as man or men's activities.

DVB2Q

CONTENTS

9.1 Introduction of Automation
9.2 Types of Automation
9.3 Needs for industrial Automation
9.4 The Advantages and Disadvantages of Automation
9.5 Applications of Automation
9.6 Introduction of Robotics
9.7 Definition of Robot and its main parts
9.8 Advantages and Disadvantages of Robot
9.9 Asimov Laws of Robotics
9.10 Need of Robotics
9.11 Types of Robots
9.12 Materials used for Robots

9.1 Introduction of Automation

Automation is the technology by which a process or procedure is performed without human assistance.

Automation covers applications ranging from a household thermostat controlling a heater, to a large industrial control system.

Automation has been achieved by various means including mechanical, hydraulic, pneumatic, electrical, electronic devices and computers, usually in combination. Complicated systems, such as modern factories, airplanes and ships typically use all these combined techniques.

The word "Automation" is derived from ancient Greek words of Auto (means "Self") Matos (means "moving"). Thus, a mechanism move by itself or self dictated is called automation.

9.2 Types of Automation

9.2.1 Based on control

a. Partial Automation

It means replacement of human activities or involvement by automatic means only partially.

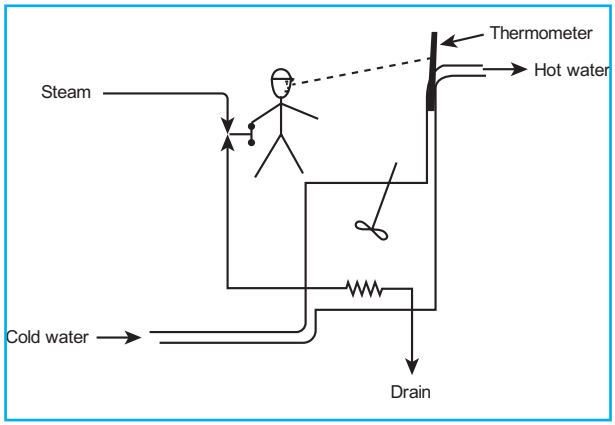

Partial Automation

b. Fully automation

The human involvement is totally eliminated and the process is entirely carried out and controlled through automatic means along with a proper feedback system.

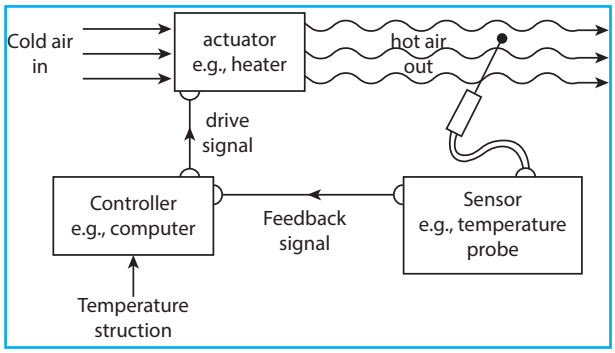

Whole Automation

9.2.2 Based on Application

a. Building Automation System (BAS)

It is the automatic centralized control of building's heating ventilation, air conditioning and lighting and other systems through a building automation system (BAS) This is also called as "Centralized control automation. The classifications are

1. Home Automation
2. Office Automation

b. Industrial Automation

It is use of computers and robots to control industrial processes like manufacturing without significant human assistance. The classifications are

A. Fixed Automation (Hard Automation)

Fixed automation is a system in which the sequence of processing (or assembly) operations is **fixed** by the equipment configuration.

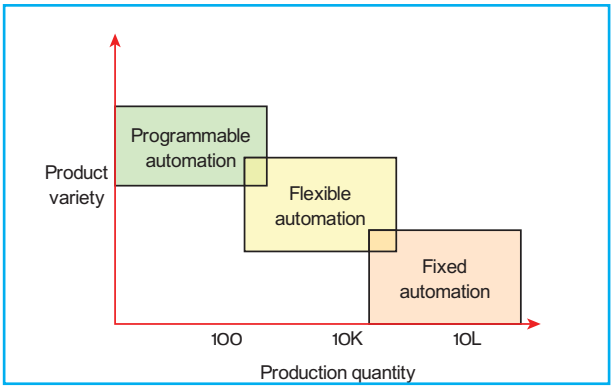

Fixed Automation system is used in the following fields:

1. Automated Assembly Machines
2. Chemical Manufacturing Processes
3. Material Handling Conveyor Systems

B. Programmable Automation

The word "Programmable" means that one set of task can be easily switched over to another set by changing the computerized instructions.

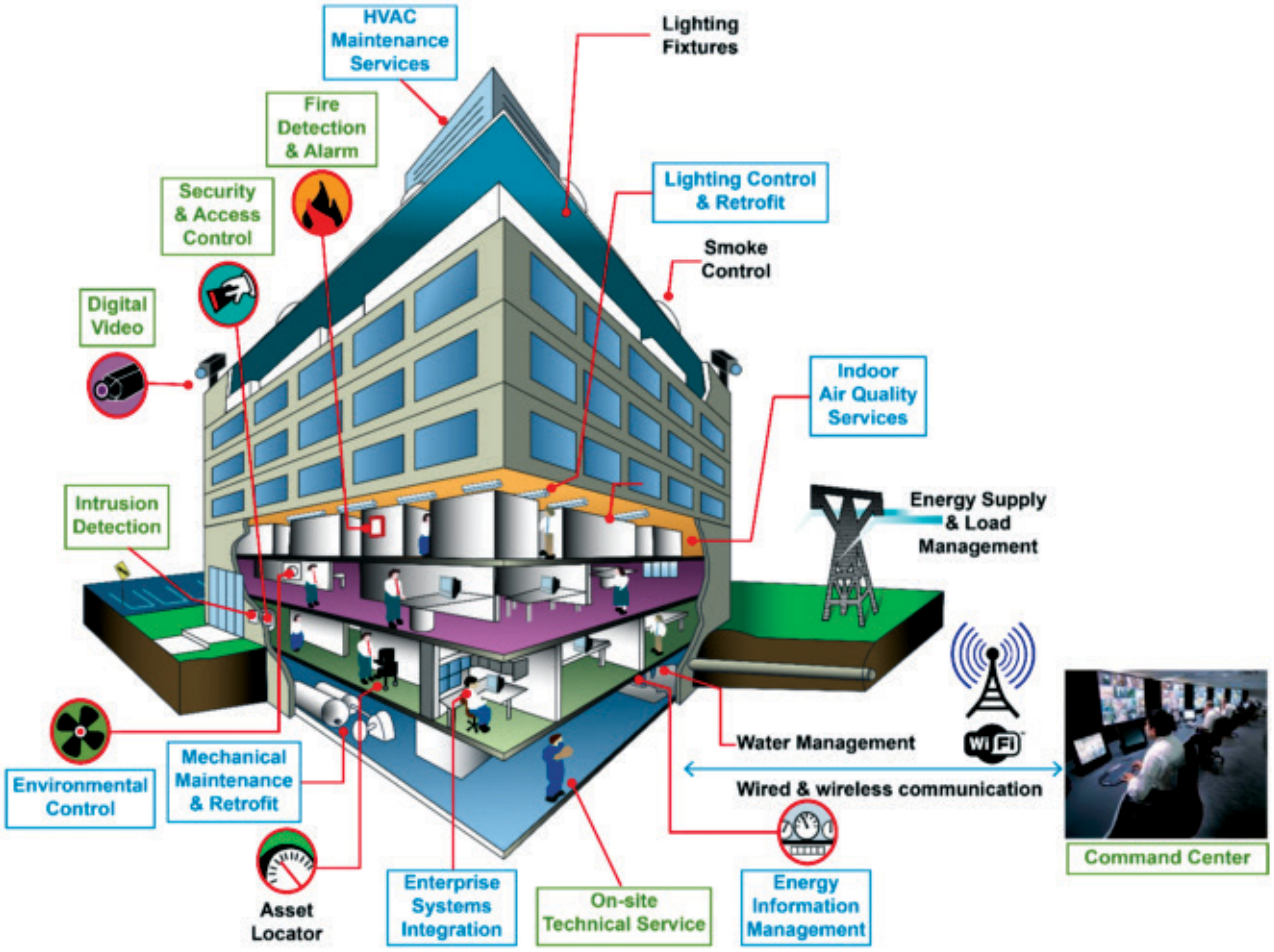

Building Automation System (BAS)

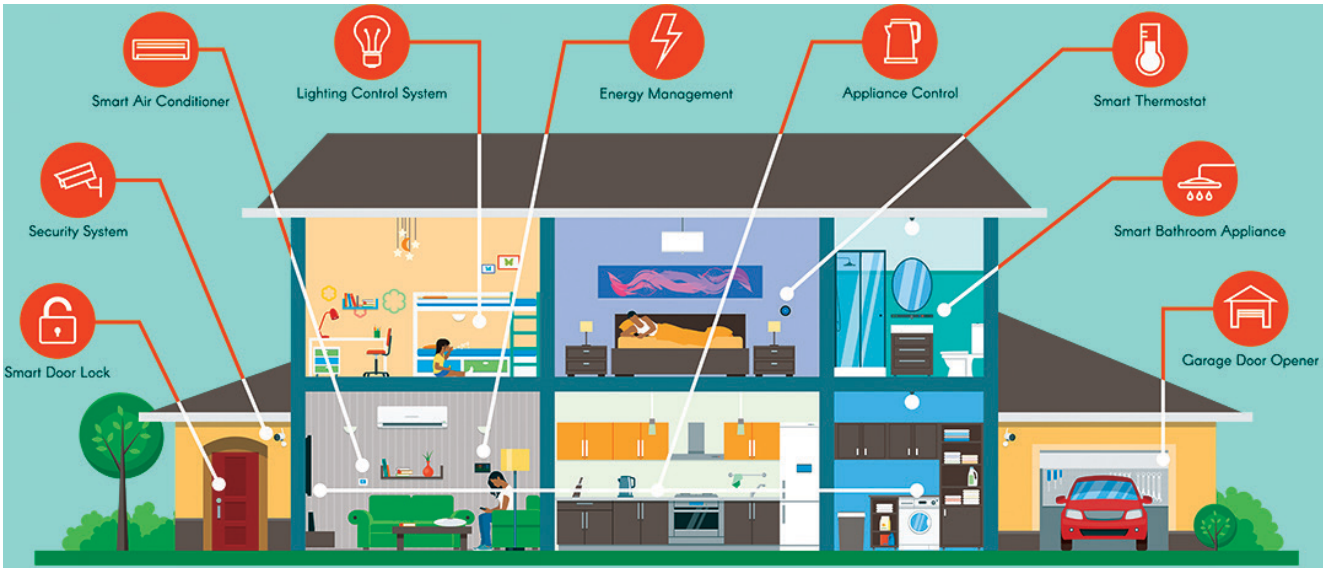

Home Automation

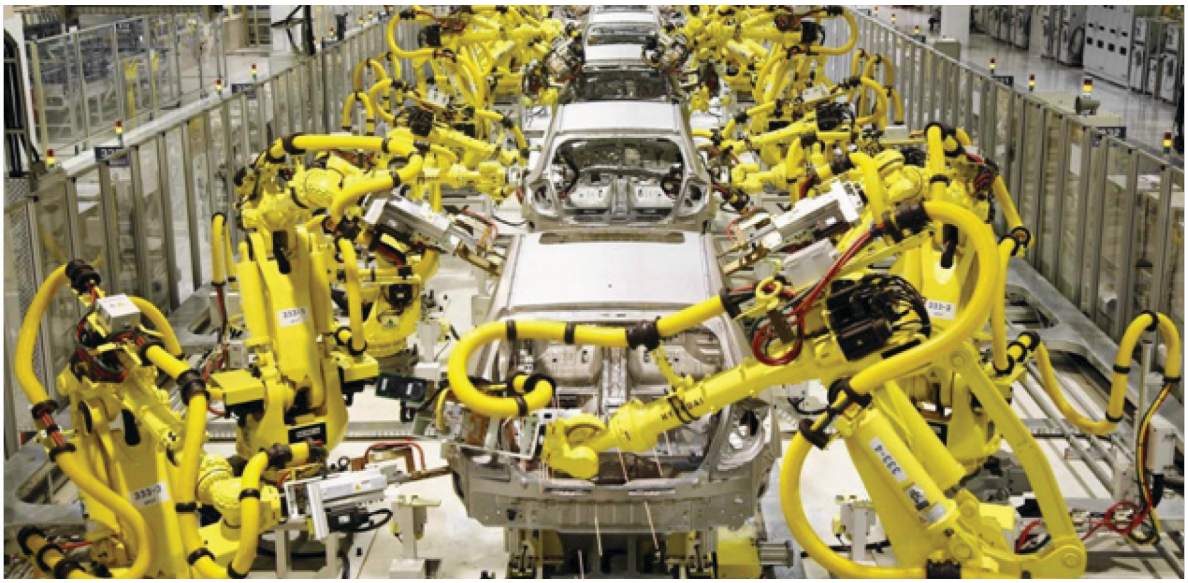

Industrial Automation System

FLOW CHART

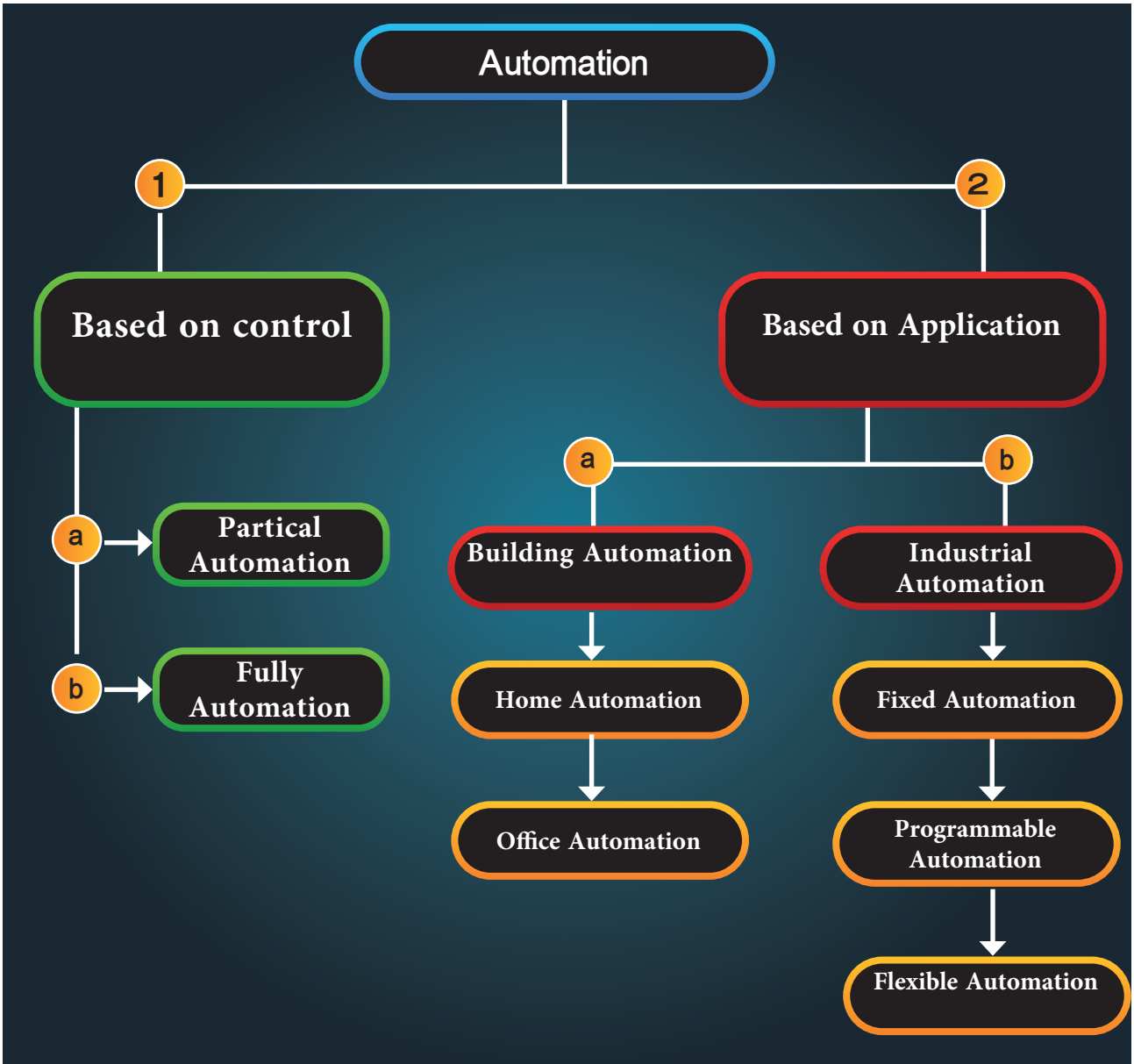

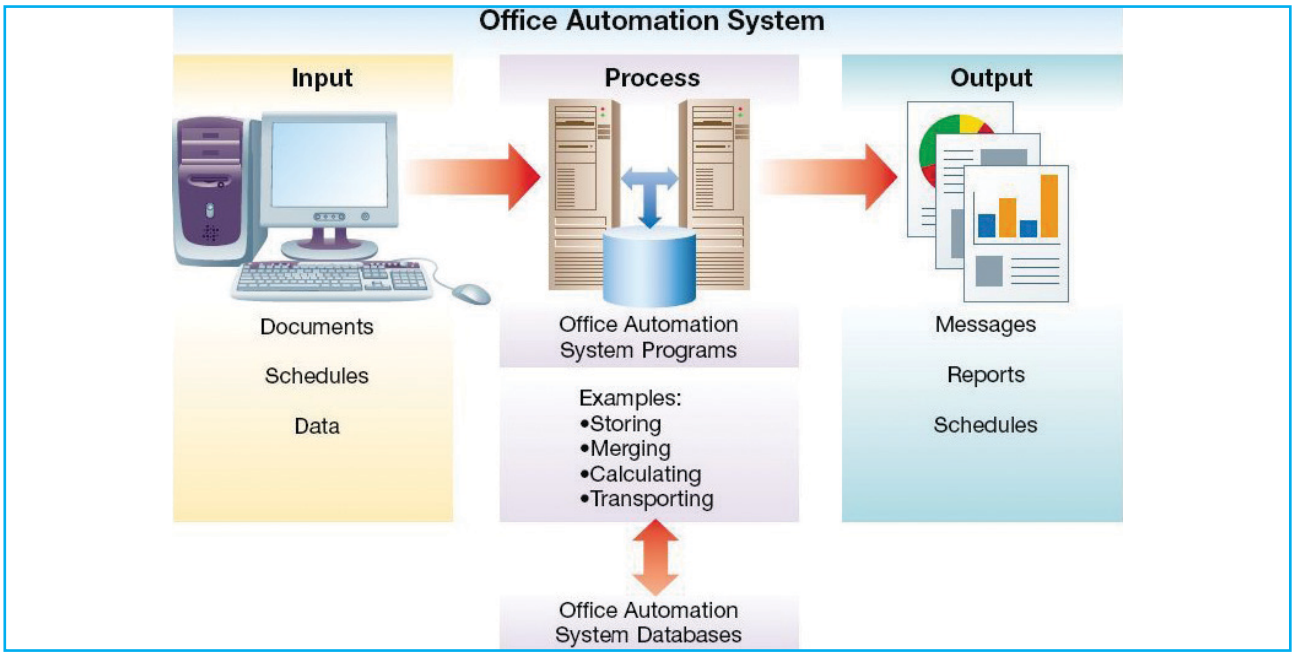

i. Computer Aided Design (CAD)

ii. Computer aided Manufacturing (CAM)

iii. Computer Integrated Manufacturing (CIM)

Programmable Automation is used in the following fields:

1. Computer Numerical Controlled Machine Tools
2. Industrial Robots
3. Programmable Logic Controllers (PLC)

C Flexible Automation (Soft Automation)

It has the capability of producing a variety of parts with minimal change over time from one part to the next.

Flexible automation is used in the following fields:

1. Electronic industry (Especially to produce printed circuit boards (PCB) with integrated circuits (IC))
2. A robot arm that can be programmed to insert screws, drill holes, weld, insert rivets and spray paint on objects in an assembly line.
3. Packaging automation.

9.3 Needs for Industrial Automation

- To increase the labour productivity
- To improve the product quality
- To reduce the labour or production cost
- To reduce routine manual tasks
- To improve safety
- To assist remote monitoring

9.4 The Advantages and Disadvantages of automation

Advantages

- Increased throughout productivity.
- Improved quality or increased predictability of quality
- Reduce overall production cost
- Less floor area required
- Human fatigue is greatly minimized
- Replaces humans in tasks done in dangerous environments (i.e. fire, space, volcanoes, nuclear facilities, underwater, etc.)
- Reduces operation time and work handling time significantly.
- Reduce maintenance requirements
- Uniform components are produced

Disadvantages

- Possible security threats/vulnerability due to increased relative susceptibility for committing errors.
- Unpredictable or excessive development costs.
- High initial cost.
- Displays workers due to job replacement.
- Leads to further environmental damage and could compound climate change.

9.5 Applications of Automation

1. CNC Machines
2. Automatic production wings
3. Automatic assemble section
4. Manufacturing of Robots

உங்களுக்குத் தெரியுமா?

Father of automation

Nikola Tesla (1856 – 1943)

"Nikola Tesla" is called the father of automation. Year: 1856 – 1943. He was a Serbian – American inventor, Electrical engineer, Mechanical Engineer.

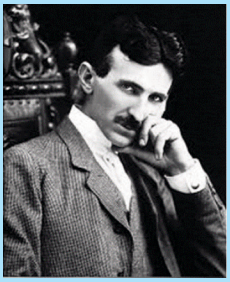

Nikola Tesla
(1856 – 1943)

ROBOTICS

9.6 Introduction of Robotics

Robotics is an interdisciplinary branch of engineering and science that includes mechanical engineering, electronics engineering, computer science, and others. Many definitions have been suggested for what we call a robot. (The word may conjure up various level of technological specification, ranging from a simple material handling device to a humanoid). It is widely accepted that today's robots used in industries originated in the invention of programmed material handling device by George. C. Devil in 1954.

9.7 Definition of Robot and its main parts

A robot is a multifunctional machine for the performance of a variety of tasks like human activities. It is a computer controlled automatic machine.

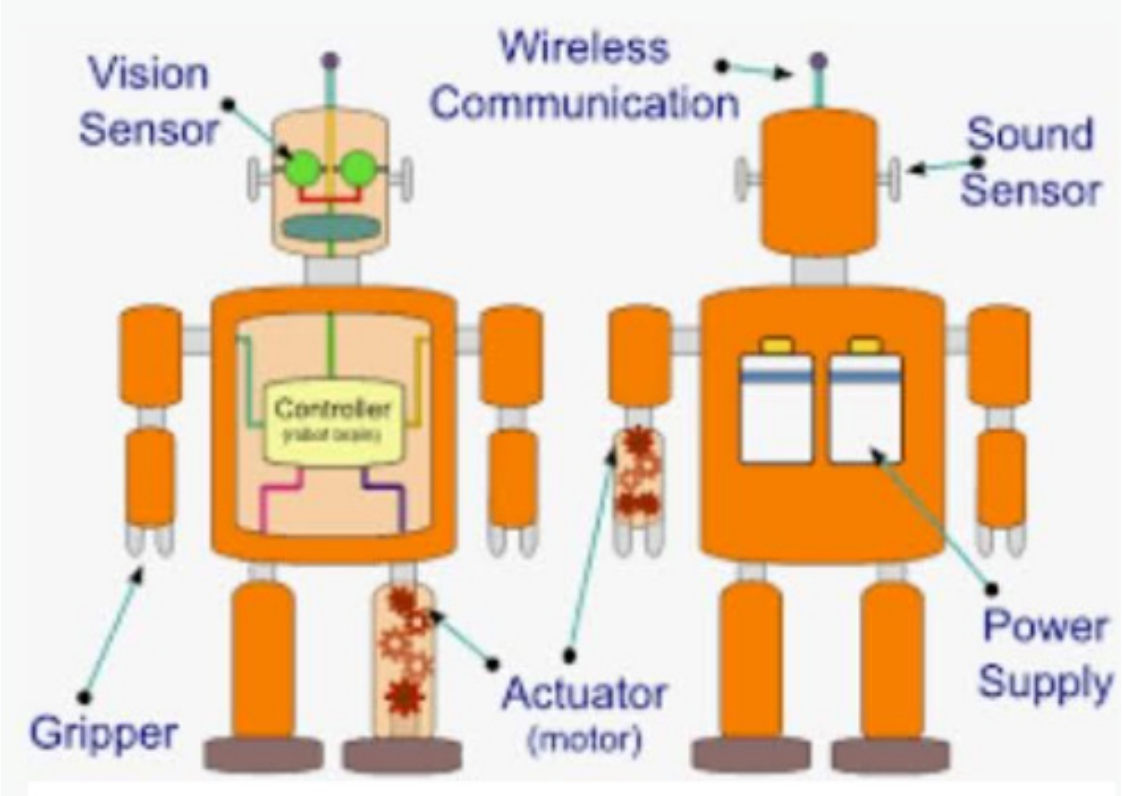

FIRST ROBOT IN THE WORLD

Father of Robotics Mr. George Devol

In 1954 George Devil invented the first digitally operated and a programmable robot called the Unimate. In 1956, Devil and his partner Joseph Engelberger formed the world's first robot company. In 1961, the first industrial robot, Unimate, went online in a General Motors automobile factory in New Jersey. Oct 16, 2017.





Main parts of Robot

1. **Power supply**

   The working power to the robot is provided by batteries, hydraulic, solar power or pneumatic power sources.

2. **Actuators**

   Actuators are the energy conversion device used inside a robot. The major function of actuators is to convert energy into movement.

3. **Electric Motor (DA/AC)**

   This is used for converting electrical energy into its equivalent mechanical energy. In robots, motors are used for providing rotational movement.

4. **Controller:**

   Controller is a part of robot that coordinates all motion of the mechanical system. It also receives information's from outside through various sensors. The controller is also known as "Brain of the Robot"

5. **Sensor**

   Sensor is an important part of robot. It is used to collect information from the

environment and carried to controller of robot. This will help controller to make decisions' about tasks like how to move or where to go next. The important types of sensor are

a. Vision sensor

b. Proximity sensor

c. Sound sensor

d. Temperature sensor

e. Acceleration sensor

f Pressure sensor

6. Tooling in end of arm (Ex: gripper or spray gun or welding electrode)

7. Transmission elements (Ex: belt, chain pulley, gear, moving screw)

Functions of Robotics

It can be classified into three areas

1. "Sensing" the environment by external sensors

   Example: Vision, Voice, Touch, Proximity, and so on

2. "Decision making" based on the information received from the sensor

3. "Performing" the task decided.

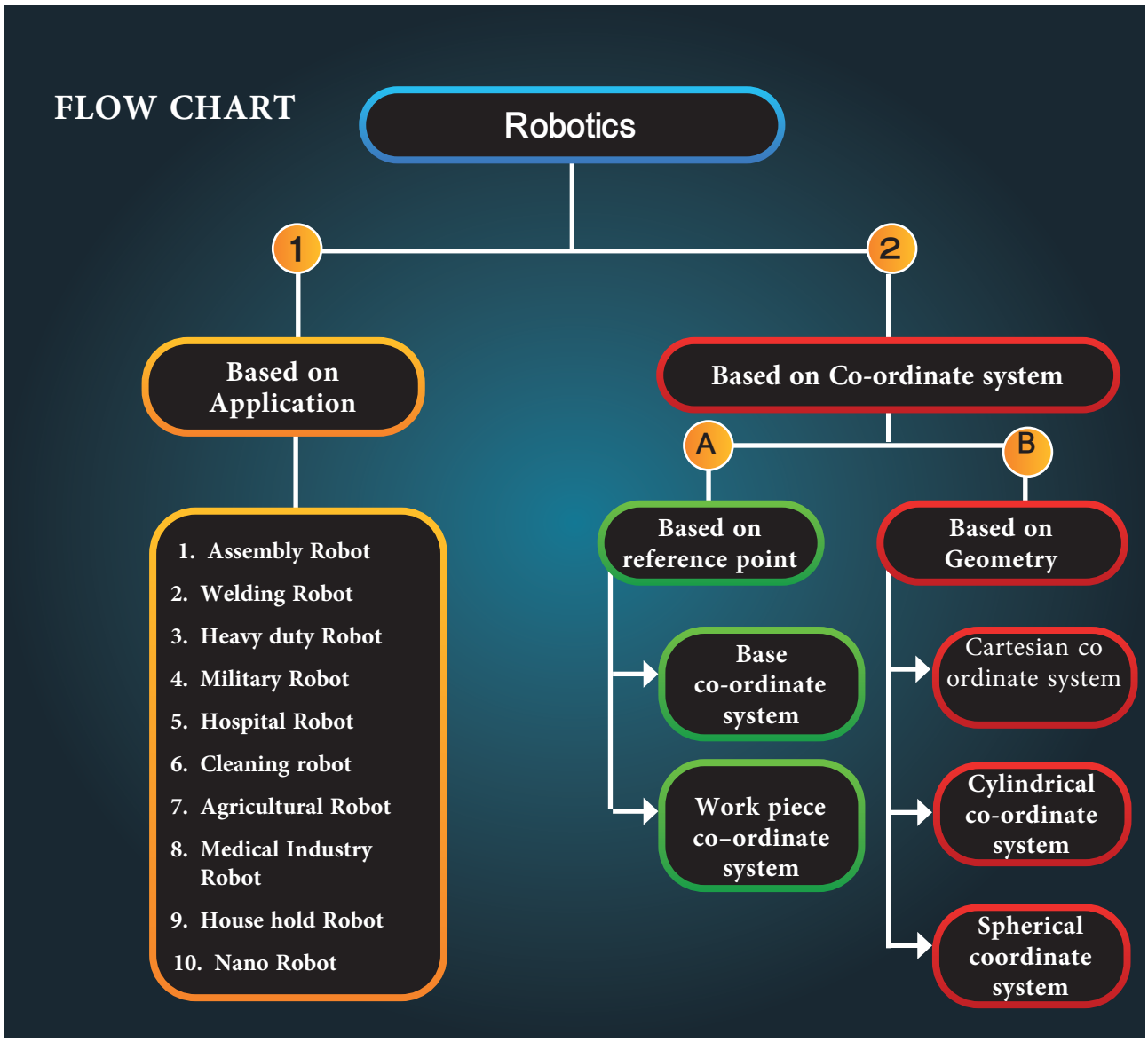

Three Main components of robots

1. Mechanical Components
2. Electrical components
3. Computer programming code

The latest technologies are used to develop machines that can substitute for humans and replicate human actions are called robot.

The robots are mainly used in dangerous environments, manufacturing process or where human cannot survive.

9.8 Advantages and Disadvantages of Robot

Advantages

1. Lifting and moving heavy objects
2. Working in holistic environment
3. Providing repeatability and consistency
4. Working during unfavourable hours
5. Performing dull or momotonous jobs
6. Increasing productivity and safety
7. Achieving more accuracy than human beings

Disadvantages

1. The robots lack capability to respond in emergencies
2. The initial and installation cost of equipment high
3. They replace human workers, thus causing unemployment.

9.9 Asimov Laws of robotics

1. A robot must not injure a human being or, through inaction, allow a human being to come harm.
2. A robot must obey the orders given it by human being except where such orders would conflict with first law.
3. A robot must protect its own existence as long as such protection does not conflict with the first law or second law.

Mr. Isaac Asimov
(1920 - 1992)



Isaac Asimov was an American writer and professor of biochemistry at Boston University. He was known for his works of science fiction and popular science. He was a prolific writer who wrote (or) edited more than 500 books and an estimated 90,000 letters and postcards.

9.10 Need of Robotics

- To improve the quality of products
- To reduce the preparation time
- Skilled labour shortage
- To reduce rising cost
- Pressure to increase production rates to compete market.

9.11 Types of Robots

1. Based on application
   a. Assembly robot
   b. Welding robot
   c. Heavy duty robot
   d. Military robot
   e. Hospital robot
   f. Cleaning robot
   g. Agricultural robot
   h. Medical industry robot
   i. House hold robot
   j. Nano robot

2. Based on coordinate system,

a. Base on the reference point

i. Base coordinate system It is located at the base of the robot

ii. The work piece coordinate system

It is related to the work piece and is often the best one for programming the robot.

b. Based on geometry

i. Cartesian coordinate system

ii. Cylindrical coordinate system

iii. Spherical coordinate system or polar coordinate system

9.12 Materials used for robots

Following are some of the plastics most frequently used as rigid structural materials.

1. Polystyrene
2. Plexiglass
3. Rigid PVC
4. ABS plastic
5. Polycarbonate
6. Polyethylene and polypropylene
7. Nylon

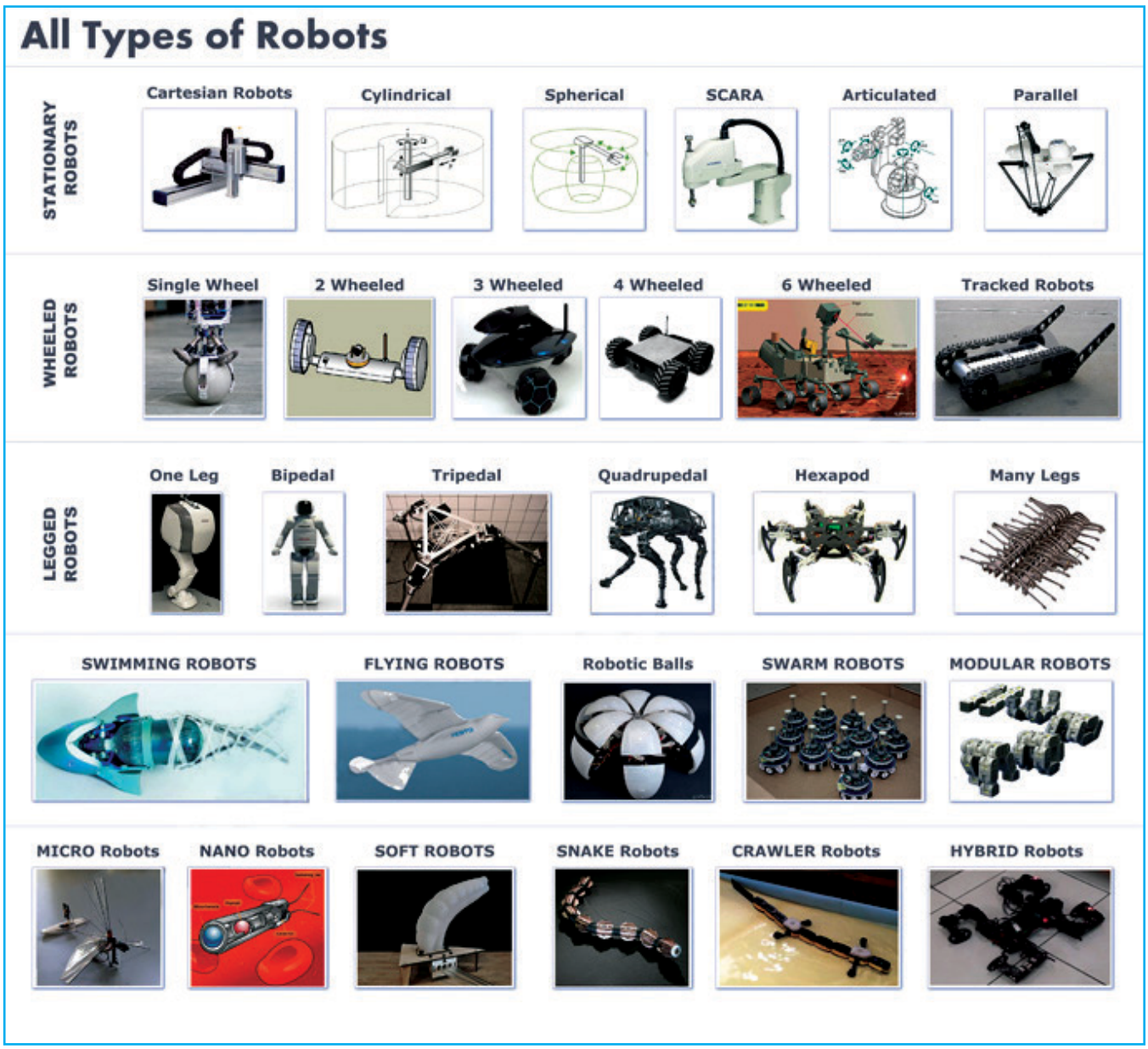

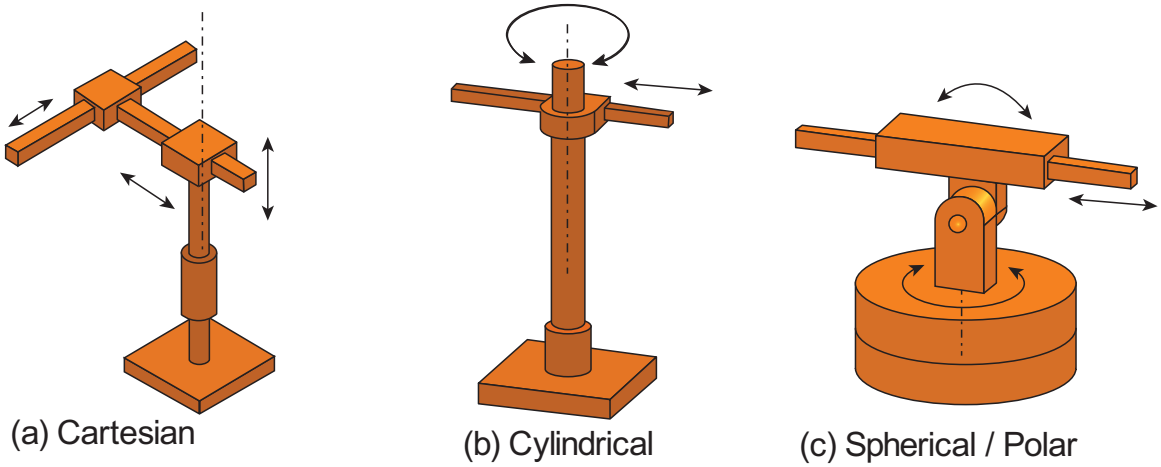

Robot Coordinate System

ACTIVITIES

1. Buying the Robotoys and give practice for dismantling and assembling the parts.
2. Students to know about the functioning of parts of robot.
3. How to operate the electric equipments in home and offices through the cellphone.

Questions

Part I.

Choose the correct option **1 Mark**

1. "Centralized control automation" is the other name of _____
   a. Building automation system
   b. Industrial automation system
   c. Standard automation system
   d. Partial automation system
2. The basic principles of Robot is formed by
   a. Asimov
   b. Hectare
   c. George devil
   d. Joseph rengal Berger
3. The brain of the Robot is called _____
   a. Sensor
   b. Controller
   c. Piston
   d. Gears
4. The part which receives the commands and send to the control system in Robot is
   a. Controller
   b. Gears
   c. Sensor
   d. Piston

Part II.

Answer the following questions in one or two sentences **3 Marks**

5. What is meant by "Automation"?
6. What are the different types of automation?
7. What are various types of "Based on control"? of automation
8. Mention the types of "Based on Application" of automation
9. What is "Robot"?

Part III.

Answer the following questions in about a page **5 Marks**

10. What are the needs for industrial automation?
11. What are the applications of automation?
12. What are the needs of robot?
13. What materials are required to make "Robot"?

Part IV.

Answer the following Questions in detail. **10 Marks**

14. What are advantages and disadvantages of automation?
15. Explain about the important parts of robot.
16 What are the advantages and disadvantages of robot



CHAPTER 10

INDUSTRIAL MANAGEMENT

Learning Objectives

- To know about the industrial management, the types of management, important factors of plant location in industries.
- To know about the production and productivity and quality control.
- To know about the F.W. Taylor and Henri Fayol management and their principles.
- To know about lean manufacturing, 7QC tools, SPC and 6σ
- To know about the cost estimation

87J0Z

CONTENTS

10.1 Introduction
10.2 Plant Location
10.3 Important Factors to be considered in Selecting a plant Location
10.4 Plant Layout
10.5 Work Study
10.6 Production and Productivity
10.7 Productivity based on different Sources
10.8 Production Planning and Control (PPC)
10.9 Function of PPC
10.10 Quality Control
10.11 Principles of Management
10.12 Organisation
10.13 Lean Manufacturing
10.14 Seven Quality Control Tools (7QC Tools)
10.15 Statistical Process Control (SPC)
10.16 Six Sigma
10.17 Kaizen
10.18 Cost Estimation

10.1 Inroduction

Factory is a place of required resources collected in one place to manufacture materials in correct size and correct shape. The resources are trained men, raw materials, machines etc.

10.2 Plant Location

Plant location is an important exercise of selecting a suitable site and area of establishing a new plant or for expanding an existing plant. This is very essential as it decides the operational and capital cost of the product.

10.3 Important Factors to be Considered in Selecting A Plant Location

1. The plant should be located as near as possible to the place where the raw materials are available. This will reducethe cost involved in transportation of the raw materials.
2. The location should be conveniently connected by highways and railways.
3. The availability of adequate labour is an important factor.
4. The topography of geography, area of available land, shape of the site and drainage facilities should be suitable to the needs of the plant. The location should not be prone to floods and earthquakes.
5. Sufficient quantity of quality water should be available near the plant location.
6. The atmosphere of the plant should provide adequate lighting and ventilation facilities.
7. Electrical power of adequate strength and necessary fuel should be available at the plant location.
8. Location of the plant should be selected to avail maximum tax concessions, loan facilities and low power tariff.
9. Proper housing facilities for the employees, presence of hospitals, educational institutions, banks, markets and recreational facilities should also be considered while selecting locations.
10. Presence of related industries near the location is preferable.

10.4 Plant Layout

The physical arrangements of buildings, machinery, equipments, work-places and other facilities for the manufacturing process is known as plant layout.

10.4.1 Advantages of Plant Layout

1. Handling of materials and transportation becomes minimum.
2. The rate of production increases because of effective use of man and machines.
3. Workers feel comfortable with less movement inside the plant.
4. The available space is economically and efficiently used.
5. Investments on equipments becomes minimum.
6. Simple, easy and effective supervision is possible.

10.5 Work Study

Work study is a technique to increase the productivity. It is used to find out the reasons for shortfall in the efficiency of the human work and set guidelines for improvement. By increasing production, the cost is reduced and the product reaches more people. Work study aims on the above objective.

Work study is a combination of two techniques namely

1. Method study
2. Work measurement.

Work study= Method study + Work measurement

10.5.1 Method Study

Method study is a systematic recording and critical analysis of the method of doing a work. It also proposes a new method of doing the same work in a easy and effective manner to reduce costs.

10.5.2 Work Measurement

Work measurement is a technique to find out the time taken for a qualified worker to finish a specified work at a particular level of performance.

10.6 Production and Productivity

Production can be defined as a process of manufacturing the required end product from the available raw materials.

Raw material → production → products

Productivity can be defined as a ratio between the output of products produced and the input resources for production.

$$\text{Productivity} = \frac{\text{Production Output}}{\text{Input of Resources}}$$

10.7 Productivity Based On Different Resources- Productivity Of Land

Let us assume an agriculturist spends ₹5000/- to plant casuarina saplings in his land of 1 acre and earns yields worth ₹10,000/-.

$$\text{Productivity} = \frac{\text{Production Output}}{\text{Input of Resources}}$$

$$\text{Productivity} = \frac{10000}{5000} \text{ X } 100$$

Productivity = 200%

we consider another case where the same agriculturist spend. ₹6000 for better saplings and better methods of cultivator in the same area and earns yields worth ₹15,000/-.

$$\text{Productivity} = \frac{\text{Production Output}}{\text{Input of Resources}}$$

$$\text{Productivity} = \frac{15000}{6000} \text{ X } 100$$

Productivity = 250%

In this case, the productivity is increased by 50%.

10.7.1 Productivity of Men

We consider a case of machinist who works on a milling machine and makes 40 gears a day. By improved methods of work, the same machinist is able to machine 50 gears in a day. The increase in productivity can be calculated as,

$$\text{Increase in Productivity} = \frac{\text{Change in Production}}{\text{Original Production (Input)}}$$

$$\text{Productivity} = \frac{50\text{-}40}{40} \text{ X } 100$$

Increase in Production = 25%

10.7.2 Productivity By Machine

Let us consider a case where an operator works on a drilling machine for 8 hours to make drills on 100 identical work pieces. With the same machine, the operator is able to make drills on 140 work pieces by using jigs and drills with high cutting speeds

10.7.3 Factors increasing Productivity

Some important factors of increasing the productivity are given below,

1. By improving the working conditions.
2. By improving the process involved in production
3. By reducing the non-productive time by work measurement
4. By providing suitable incentives to the workers.
5. By proposing better plant maintenance programmes.
6. Old and worn out machines should be corrected to make them function as before.
7. Men, Machine and Materials should be maintained at the required quantum.
8. By providing the operators with new and proper training.
9. Layout of the plant and equipments should be improved.

10.8 Production Planning and Control (PPC)

Production planning is a process of scheming the production procedures to get the finished products of required quality from the raw materials with in a prescribed time frame economically.

Production control is a process of making specific arrangements to carry out the procedures outlined by production planning. It should also over see corrective measures in case of failures in the production process.

10.9 Function Of PPC

1. Pre-planning: It involves the decisions of the preparatory functions in the production process.
2. Route plan: It is the plan arranging various activities that take place from the stage of raw material to the finished product.
3. Scheduling: Scheduling is the preparation of a time table to show the time of starting and the time of completing of operations involved in production of each component.
4. Despatching: It is the process to deliver the route plan and schedule to the respective departments.
5. Controlling: It is the process of getting reports from all departments regarding production and taking correcting actions, if necessary.

10.9.1 Importance Of PPC

PPC will provide the guideline to every industry. Guideline is very important to all departments. It must be clear and correct. So PPC is the "Brain of the Industry".

The important task of arranging specific instructions to the workers to carry out specific tasks, at specific time, frame with specific materials at specific quantity and quality on specific machines.

If the PPC does not work in right way, the industry gets affected. So every industry needs skilled PPC.

10.10 Quality Control

Quality

Product quality refers to how well a product satisfies customer needs, serves its purpose and meets industrial standards. It depands on the product, the machine, cutting tools and work holding devices.

Definition of Quality control

A system of maintaining standards in manufactured products by testing a sample of the output against the specification.

10.11 Principles of Management

The Principle of management are the activities that "plan, organize and control the operation of the basic elements (People), materials, machines, money and makets

10.11.1 Management

Management is a process of achieving the objectives of an organisation by directing and controlling the various activities of the involved man power.

10.11.2 Frederick W. Taylor

Ferderick W. Taylor is called as the father of scientific management. He started his carrier as a labour in Midvale steel company of USA in the year 1878. He held different positions in the company and later become the chief engineer in 1884. He wrote many management books related to industries. 'The principle of Scientific Management' is one of the important management books written by F.W. Taylor.

According to F.W.Taylor, Scientific Management involves the following procedures.

1. Observation
2. Measurement
3. Experimented Comparison
4. Formulation of Procedure.

10.11.3 Henri Fayol

Henri Fayol was a French industrialist. He was a graduate in mining engineering. He joined as an engineer in a coal mining company in the year 1860. Later, he became the managing director of the company. He retrieved the company from near bankruptcy to set it as a leading coal mining company in France.

Based on his hand work and a successful managing experience, he wrote a book titled "General and Industrial Management". It contained his general management principles. He categorized all the activities of industrial undertakings into six groups. They are,

1. Technical activities (production related)
2. Financial activities (Capital related)
3. Commercial activities (buying material and selling products)
4. Security activities (protection of properties)
5. Accounting activities (Statistics and Stock Taking)
6. Managerial activities (plan and control)

10.12 ORGANISATION

The process of organizing in a industry involves the identification and establishment of its objectives and coordination of the capital, raw material, machines and people to reach out the set objectives. The institution which involves the process is known as an organisation.

10.12.1 Types of Organisation

1. Line organisation
2. Taylor's functional organisation
3. Line and staff organisation
4. Line and functional staff organisation
5. Committee organisation.

Organisation chart

It is a graphical representation of various steps of organizational structure.

1. Simple organization chart.
2. Functional organization chart.

Simple Organization Chart

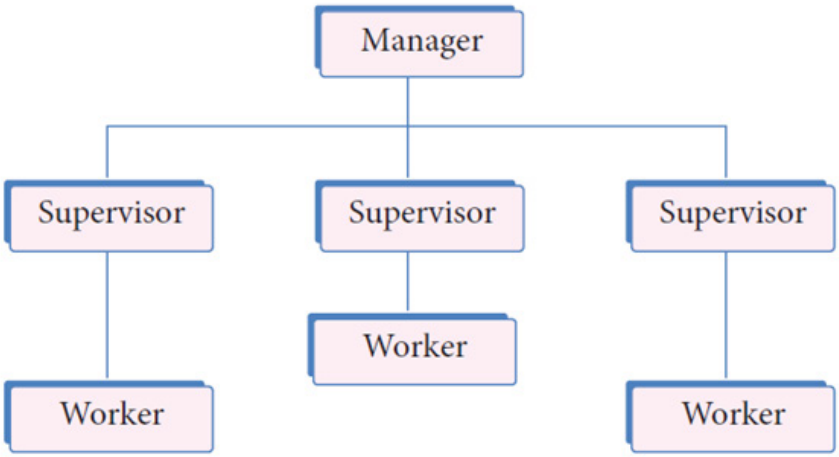

Functional Organization Chart.

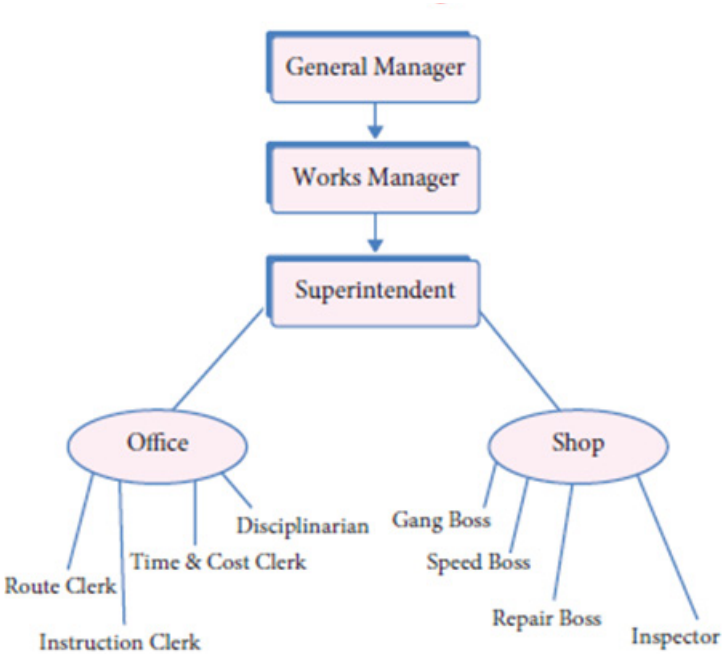

10.13 Lean Manufacturing

Lean manufacturing is a systematic method for waste minimization/ elimination within a manufacturing system without sacrificing productivity.

Seven wastes - Lean manufacturing:

1. **Waste of over Production**

   Producing more than customer demand or producing too earlier is called as over production and is a waste.

2. **Waste of Rework**

   Producing defective products, segregating and reworking defective products is a waste.

3. **Waste of Waiting**

   The parts should move from one process to the next and ultimately to the customer without any waiting. Parts waiting for want of anything is a waste.

   (Example: Machine breakdowns, Tool/die changeover etc.,)

4. **Waste of inventory**

   Inventory is the quantity / amount of raw materials, Work in process items (WIP) and finished goods (Products) owned by a company (available in hand). Holding more inventory than needed is a waste.

5. **Waste of transportation**

   Excessive (unproductive) movements and handling of material due to incorrect plant layout is a waste.

6. **Waste of Motion**

   Any movement of people that does not add value to the product is a waste. Workplaces and processes need to be designed considering ergonomics.

7. **Waste of Over Processing**

   Processes that add more value to a product, but that is not a customer requirement or product's functional requirement is called as over processing and is a waste.

10.14 Seven Quality Control tools (7QC tools)

1. Check sheet
2. Cause & Effect Diagram
3. Control Chart
4. Histogram
5. Pareto Chart
6. Scatter Chart
7. Stratification

10.15 Statistical Process Control (SPC)

Statistical process control (SPC) is a Quality control method which uses statistical methods to monitor and control a process.

SPC helps to ensure that the process operates efficiently, producing specification conforming products.

10.16 Six Sigma (6σ)

Six Sigma is a statistical based data driven approach and continuous improvement methodology for eliminating defects/ reducing variation in a product, process or service.

Six Sigma (6σ) Methodologies

DMAIC



- **D**efine
- **M**easure
- **A**nalyse
- **I**mprove
- **C**ontrol

DMADV

- **D**efine
- **M**easure
- **A**nalyse
- **D**esign
- **V**erify



10.17 Kaizen

Kaizen is a Japanese word and it means Continuous Improvement.

Kaizen is small improvements systematically carried out on a continual basis by all employees.

Principle of Kaizen

Large number of small improvements = Large improvement.

10.18 Cost Estimation

Cost estimation can be defined as the estimation of expenditure for the entire manufacturing process of an object produced in a factory. Cost estimation can be classified by the following points.

1. Cost of raw materials
2. Machining charges
3. Wages for the worker
4. Cost for making accessories
5. Administrative expenditure
6. Profit

10.18.1 Cost of Raw Materials

The cost of raw materials includes the price of the material required, import tax, labour charges paid for loading and unloading and transportation charges.

10.18.2 Machining Charges

A part or component obtained only after it is subjected to several operations performed on different machine tools. The machining charges are calculated by the duration of machining on each of these machine tools involved in manufacturing the particular component. The machining charges differ for different type of machine tools.

The table prepared here is approximately for calculating the machinery charges. The charges may vary accordingto the cost of the machine, capacity and accuracy of the machine tool.

Machine	Duration	Rate per Hour
Drilling machine	1 hour	₹100.00
Lathe	1 hour	₹150.00
Shaping machine	1 hour	₹200.00
Milling machine	1 hour	₹250.00
Grinding machine	1 hour	₹300.00

10.18.3 Wages for the Worker

This includes the amount of wages paid to the workers employed for operating

the machine tools and the expenditure for miscellaneous operations performed on the workpieces. Charges for hacksaw cutting, filing, fitting, and assembling are counted under this head.

10.18.4 Cost for Making Accessories like Jigs and Fixtures

When the mass production process involves the same size and quantity of materials are produced. Some special equipments like jigs and fixtures are used. The cost paid for manufacturing or purchasing the same is called cost for accessories. It reduces the production time and increase the production.

10.18.5 Administrative Expenditure

The administrative expenditure can also be called as 'overhead charges'. It includes:

1. Depreciation (wear and tear on machine tools and other tools)
2. Repairs and maintenance of the machine tools.
3. Expenditure on fuels and electricity.
4. Rent and maintenance paid for the building of the manufacturing unit.
5. Salary paid to the administrative staff and expenses for purchasing office records.
6. Salary paid to the supervisors, store-keepers and watchman.
7. Expenditure for advertising, travel and postage.
8. Amount spend for the Welfare of the workers, and contribution to the employee's fund (it includes savings for workers, medical insurance,their child education fund and other expenses)
9. Interest on capital.

10.18.6 PROFIT

Profit is calculated in the range of 10% to 30% of the total cost of estimation. The profit percentage varies for each factory according to their capital invested.

QUESTIONS

Z9PH8

Part I

Choose the correct option

1 Mark

1. Work study is
   a. Method of plant study
   b. A technique of increasing production
   c. Method study
   d. Work measurement
2. Production planning is
   a. Productivity of men
   b. Productivity of land
   c. Scheming of productivity procedure
   d. Quality control

3. Father of 'scientific management' is
   a. Henry Fayol
   b. Pierre Vernier
   c. F.W. Taylor
   d. Michael Faraday
4. The book "general and industrial management" was written by
   a. Michael Faraday
   b. Henry Fayol
   c. F.W. Taylor
   d. Pierre Vernier
5. The book " the principles of scientific management" was written by
   a. Pierre Vernier
   b. F.W. Taylor
   c. Michael Faraday
   d. Henry Fayol
6. DMAIC stands for
   a. Define, Make, Act, Improve, Control
   b. Define, Measure, Analyse, Improve, Control
   c. Design, Mould, Alter, Interact, Cold
   d. Define, Mould, Analyse, Improve, Control
7. DMADV stands for
   a. Define, Measure, Act, Deliever, Verify
   b. Do, Make, Analyse, Design, Vertical
   c. Define, Measure, Analyse, Design, Verify
   d. Define, Make, Analyse, Design, Verify
8. The expenditure on the maintenance of the machines are
   a. Administrative expenditure
   b. Worker's wages
   c. Cost of raw material
   d. Tax
9. Cost of accessories which is used to hold and guide the job are
   a. Administrative expenditure
   b. Jigs and fixtures cost
   c. Worker's wages
   d. Cost of raw material

Part II

Answer the following questions in one or two sentences **3 Marks**

10. What do you know about "plant Location" ?
11. What do you know about "industrial management" ?
12. Define "work study"
13. Define "method study"
14. Define "work measurement"
15. List Seven quality control tools.
16. What is Statistical Process Control (SPC) and Process Capability?
17. Define Six Sigma.
18. Define Kaizen.
19. Define "cost estimation"
20. What is machining charges

Part III

Answer the following questions in about a page **5 Marks**

21. What are the advantages of the good plant location?
22. What are the functions of PPC(Production Planning and Control)?
23. Explain about quality control?
24. How many groups are there in industrial undertakings categorized by Henry Fayol?
25. Write "types of organizations"?
26. What are the points should be taken into account for "Cost estimation"?

Part IV.

Answer the following Questions in detail. **10 Marks**

27. List out the importance to be considered in selecting a plant location?
28. What are the factors for increasing Productivity?
29. Explain about productivity of men and machine?
30. Draw a simple organization method and functional organization chart?
31. Define Lean manufacturing and explain seven wastes in Lean Manufacturing.
32. Write and Explain the "Administrative Expenditure"?

Model Question Paper

12th–Basic Mechanical Engineering-Theory

TIME: 2.30 HOURS **MARKS: 90**

PART –A

Choose the correct option **15 x 1 = 15**

1. The inventor of lathe is
   a. Henry maudslay b. Eli whitney
   c. James nasmith d. Michael faraday

2. A part used for taper turning
   a. Cross – slide b. Compound rest c. Saddle d. Apron

3. The lip clearance angle of a drill is
   a. 59^0 b. 118^0 c. 12^0 to 15^0 d. 135^0

4. The groove in the body of the drill is
   a. V-shape groove b. U-shape groove
   c. Flute d. Straight shape groove

5. The operation mainly done in a shaping machine is
   a. Turning b. Drilling
   c. Machining a flat surface d. Thread cutting

6. The part involved in reciprocation by quick return is
   a. Table b. Ram c. Saddle d. Crossrail

7. The heat generated during dry grinding process will be
   a. 20^0 c b. 1000^0 c c. 2000^0 c d. 1200^0 c

8. The hardest natural abrasive is
   a. Sand stone b. Emery c. Diamond d. Corundum

9. In a milling machine, cutters are mounted on
   a. Column b. Spindle c. Overhanging arm d. Arbor

10. In a milling machine, travelling of work table is controlled by

a. Saddle
b. Trip dogs
c. Cross – slide
d. Elevating screw

11. Maintenance done once a year is known as

a. Routine maintenance
b. Preventive maintenance
c. Breakdown maintenance
d. Corrective maintenance

12. Plastic welding is

a. Pressure welding
b. Resistance welding
c. Fusion welding
d. Arc welding

13. IC refers to

a. Information control
b. Instruction control
c. Internal control
d. Integrated circuit

14. "The brains of Robot" is

a. Sensor
b. Control system
c. Piston
d. Gears

15. Father of scientific management is

a. Henry Feyol
b. Pierre Vernier
c. F.W. Taylor
d. Michel Faraday

PART – B

Answer any ten of the following
Questions in one (or) two lines

10 x 3 = 20

16. Define "swing diameter" in lathe.
17. What is the use of "back gear" in lathe?
18. What are the special features of radial drilling machine?
19. Define "cutting speed" in drilling machine
20. What is the use of "clapper box" in shaping machine?
21. Mention any three types of Bonds used in grinding wheel.
22. What is meant by "milling"?
23. Write diffrent types of Arbor.
24. What are the different types of maintenance?
25. Mention three types of flames in gas welding.
26. What are the functions of input unit?

27. What are the types of automation based on application?

28. Define cost estimation

PART C

Answer any five of the following Questions for a Page

5 x 5 = 25

29. Mention the differences between turret and capstan lathe.

30. How do you specify the drilling machine?

31. List-out the types of shaping machine.

32. Explain with sketch the "truing of grinding wheel"

33. What are the differences between plain milling machine and universal milling machine.

34. Explain with sketch of "Greese Lubrication".

35. Explain any two parts of gas welding with neat sketch

PART D

Answer the following Questions in detail.

2 x 10 = 20

36. Draw the diagram of a Lathe and mention the parts

    (or)

    Explain the construction of a "Radial" in drilling machine with neat sketch

37. Explain any two types of work holding devices in shaping machine with neat sketches

    (or)

    Explain Arc welding with neat sketch.

Basic Mechanical Engineering

PRACTICAL

XII BME_English version Practicals.indd 151 04-02-2023 18:08:00

CONTENTS

Basic Mechanical Engineering
Practical

Ex. No.		Title of the exercise	Page No	Month
1.	FITTING	Hacksaw Cutting	153	JUNE
2.		L-Cutting	156	JUNE
3.		V- Cutting	159	JULY
4.	LATHE	Facing & Plain Turning	162	JULY
5.		Step Turning and Chamfering	166	AUGUST
6.	DRILLING	Drilling and Counter Sinking	170	AUGUST
7.		Tapping and Dieing	176	SEPTEMBER
8.	WELDING	Lap Joint	182	OCTOBER
9.		Butt Joint	185	NOVEMBER
10.		T-Joint	188	DECEMBER

XII BME_English version Practicals.indd 152 04-02-2023 18:08:00

PRACTICAL 01

HACKSAW CUTTING

OBJECTIVE

To perform the hacksaw cutting on the given M.S plate according to the given design

Operations /exercises covered under the project

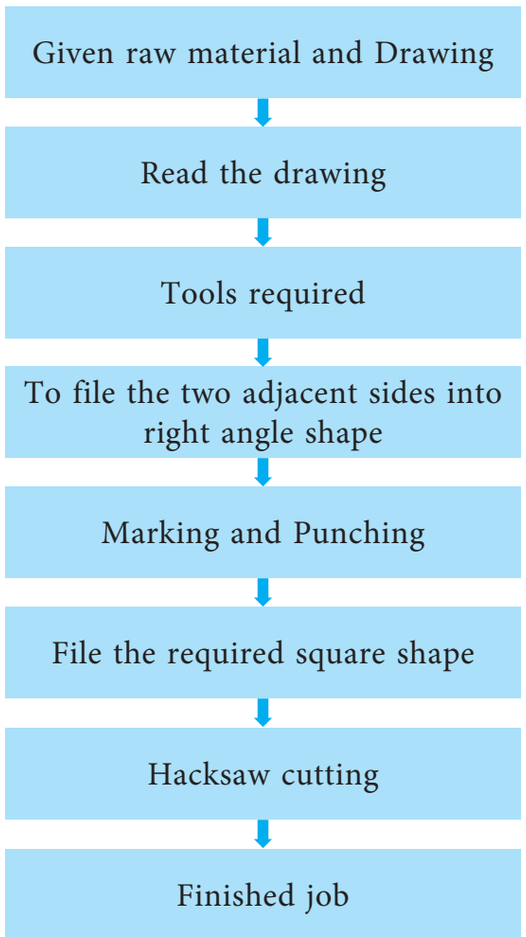

Material Specification

Mild Steel plate 50mm X 50mm X 6mm

XII BME_English version Practicals.indd 153 04-02-2023 18:08:00

Tools and equipments required :

Section / Activity Tittle	SI No	Name of the tools / Equipments	Specification	Quantity
Filing	1	Bench Vice	No.4	1
	2	Try square	½ Feet Scale	1
	3	Surface Plate	300x300 mm	1
	4	Vernier Height Guage	12”	1
	5	Steel rule	12” (One feet)	1
	6	Angle Plate	Size (1) 125 x 75 x 100 mm	1
	7	Flat File (Rough/ Medium/ Smooth)	12”	3 Nos
	8	Vernier Caliper	12”	1
Marking & punching	9	Hacksaw Frame	12”	1
	10	Hacksaw blade	10-12”	1
	11	Dot punch	Head Weight 8x100 mm	1
	12	Scriber	6”	1
Hacksaw cutting	13	Hammer	Face diameter 15/8”	1
	14	Chalk	Length 6”	1

Drawings

(i) Given Material

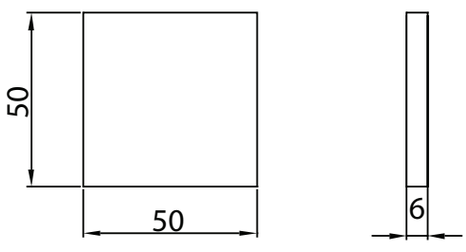

(ii) Marking & Punching

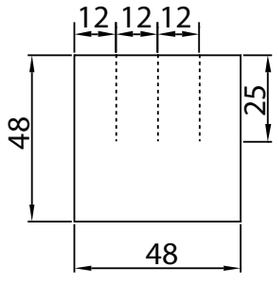

(iii) Finished Job

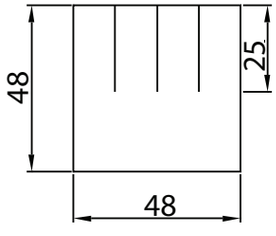

All Dimensions are in mm
Scale: Not to Scale

XII BME_English version Practicals.indd 154 04-02-2023 18:08:01

Procedure

- The design of the given model is studied completely to understand the features like its size and shape
- The given raw material is checked for size whether it is sufficient for the design.
- Hand Tools and measuring instruments are selected suitability to perform the required Operations.
- The raw material (mild steel) is held on the bench vice and two adjacent sides are filed for right angles (90^0) using a flat files. The two sides are considered prime sides.
- The remaining two sides are also filed for right angle(90^0) by using flat file at required dimension of 48x48 mm^2.
- The work piece is checked for 90^0 on all four sides with help of a try square
- A thin layer of chalk is applied on the workpiece and allowed to dry.
- Given dimension of the Hacksaw Cutting are marked with help of Vernier height gauge carefully.
- Using dot punch , dots are punched along the above marked lines by using hammer.
- Punch marks are made by keeping the dot punch inclined at 60^0 and they are filed off later. The spacing between the adjacent punch marks should be at least 6 mm.
- Hacksaw cut are made on the workpiece at marked locations at a medium speed .

Conclusion:

Hacksaw Cutting is made as per the required dimensions .

Simple Assessment :

1. The vice with ' V ' shaped jaw is .....
2. The punch used for making holes on sheet materials like leather, rubber and soft materials is .....
3. The angle of scriber is .....
4. Grade of a file with 20-25 teeth per inch .....
5. The least count of a vernier caliper .....

Answer

1. Pipe vice 2) Hollow punch 3) 12^0 4) Flat file 5) 0.02mm

Video Suggestions:

S.No	Tittle	Link
1	Hacksaw	https://youtu.be/8G9sc2mKoig

XII BME_English version Practicals.indd 155 04-02-2023 18:08:01

PRACTICAL 02

L- CUTTING

OBJECTIVE

To perform the L cutting on the given M.S plate according to the given design

Operations /exercises covered under the project

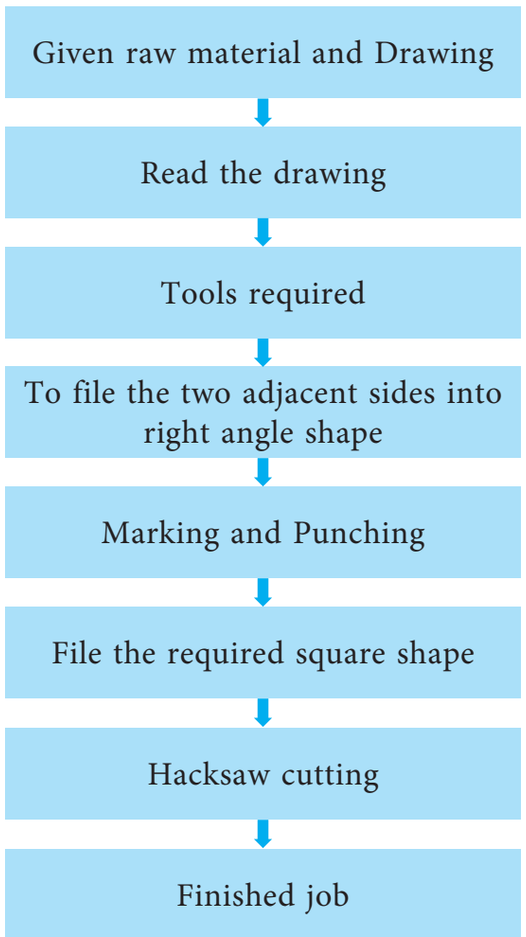

Material Specification

Mild Steel plate 50mm X 50mm X 6mm

XII BME_English version Practicals.indd 156 04-02-2023 18:08:01

Tools and equipments required :

Section / Activity Tittle	S. No	Name of the tools / Equipments	Specification	Quantity
Filing	1	Bench Vice	No.4	1
	2	Try square	½' Feet Scale	1
	3	Surface Plate	300x300 mm	1
	4	Vernier Height gauge	12"	1
	5	Steel rule	12" One feet	1
	6	Angle Plate	Size (1) 125 x 75 x 100 mm	1
	7	Flat File (Rough/ Medium / Smooth)	12"	3 Nos
	8	Vernier Caliper	12"	1
Marking and Punching	9	Dot punch	Head Weight 8x100 mm	1
	10	Scriber	150 mm	1
	11	Hammer	Face diameter 15/8 inch	1
	12	Chalk	Length 150mm	1
L-cutting	13	Hacksaw Frame	12"(300 mm)	1
	14	Hacksaw blade	10-12"	1
	15	Triangular file	12"	1

Drawings

(i) Given Material

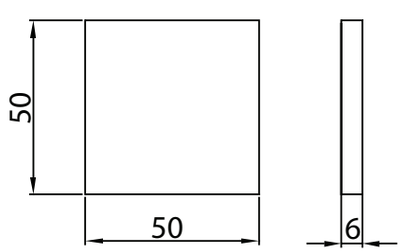

(ii) Marking & Punching

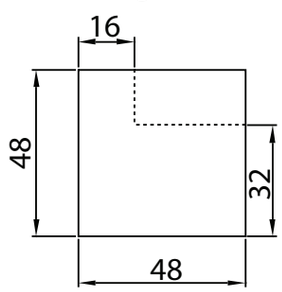

(iii) Finished Job

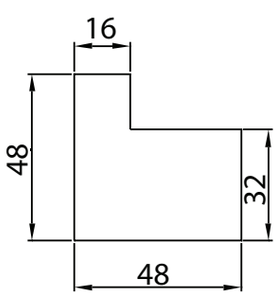

All Dimensions are in mm
Scale: Not to Scale

Procedure

- The design of the given model is studied completely to understand the features like its size and shape
- The given raw materials is checked for sizes whether it is sufficient for the design.

XII BME_English version Practicals.indd 157 04-02-2023 18:08:01

- Hand Tools and measuring instruments are selected suitabily to perform the required Operations.
- The raw material (Mild Steel) is held in the bench vice and two adjacent sides are filed for right angles (90^0) using a flat files. The two sides are considered prime sides.
- The remaining two sides are also filed for right angle(90^0) by using flat file at required dimension of 48x48 mm^2.
- The work piece is checked for 90^0 on all four sides with help of a try square
- A thin layer of chalk is applied on the workpiece and allowed to dry.
- Given dimension of the 'L' Cutting are marked with help of Vernier height gauge carefully.
- Using dot punch , dots are punched along the above marked lines by using hammer.
- Punch marks are made by keeping the dot punch inclined at 60^0 and they are filed off later. The spacing between the adjacent punch marks should be at least 6 mm.
- 'L' cut are made on the workpiece at marked locations at a medium speed .
- The rough surface resulting from hacksaw cutting is filed for required dimensions for right angles(90°) with the help of flat files. (Rough, Medium and smooth)
- Drawing the filing operation, half of the punch mark is retained on the work piece.
- The sharp corner of the 'L' shape is filed with the help of triangular file.
- While filing, the edge surface of the work piece are checked frequently for perpendicular and parallelism with the help of a try square.

Conclusion:

'L' Cutting is made as per the required dimensions.

Simple Assessment:

Questions and answer

1. Name the file used of general filing works .....
2. The point angle of centre punch is .....
3. The point angle of Scriber is .....
4. The jaw-plates of a bench vice are made of .....
5. The scriber is made of .....

Answer

1) Flat file 2) 90^0 3) 12^0 to 15^0 4) Tool steel 5) High carbon steel

Video suggestions:

Tittle	Link
L Cutting	**https://youtu.be/KgQyuCrOKoU**

XII BME_English version Practicals.indd 158 04-02-2023 18:08:01

PRACTICAL 03

V- CUTTING

OBJECTIVE

To perform the 'V' cutting on the given M.S plate according to the given design

Operations /exercises covered under the project

Given raw material and Drawing

↓

Read the drawing

↓

Tools required

↓

To file the two adjacent sides into right angle shape

↓

Marking and Punching

↓

File the required square shape

↓

Hacksaw cutting

↓

Finished job

Material Specification

Mild Steel plate 50mm X 50mm X 6mm

XII BME_English version Practicals.indd 159 04-02-2023 18:08:01

Tools and equipments required:

Section / Activity Tittle	SI No	Name of the tools / Equipments	Specification	Quantity
Filing	1	Bench Vice	No.4	1
	2	Try square	½' Feet Scale	1
	3	Surface Plate	300x300 mm	1
	4	Vernier Height Gauge	12"	1
	5	Steel rule	12" One feet	1
	6	Angle Plate	Size (1) 125 x 75 x 100 L x B x H	1
	7	Flat File (Rough/ Medium / Smooth)	12"	3 Nos
	8	Vernier Caliper	12"	1
Marking and Punching	9	Chalk	Length 150mm	1
	10	Scriber	150 mm	1
	11	Dot punch	Head Weight 8x100 mm	1
	12	Hammer	Face diameter 15/8 inch	1
V- cutting	13	Hacksaw Frame	12"(300 mm)	1
	14	Hacksaw blade	10-12"	1
	15	Triangular file	12"	1

Drawings

(i) Given Material

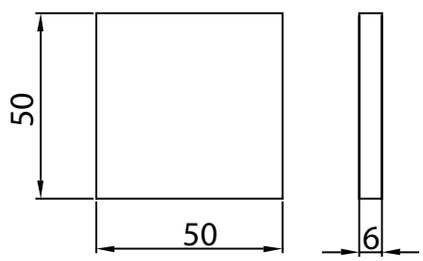

(ii) Marking & Punching

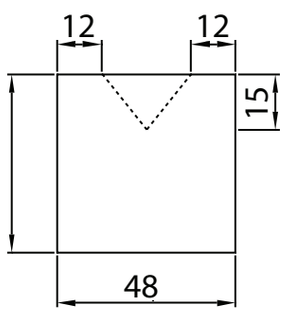

(iii) Finished Job

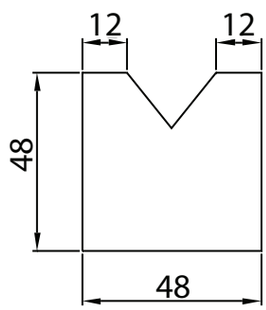

All Dimensions are in mm
Scale: Not to Scale

Procedure

- The design of the given model is studied completely to understand the features like its size and shape
- The given raw materials is checked for sizes whether it is sufficient for the design.

XII BME_English version Practicals.indd 160 04-02-2023 18:08:01

- Hand Tools and measuring instruments are selected suitability to perform the required Operations.
- The raw material (mild steel) is held in the bench vice and two adjacent sides are filed for right angles (90^0) using a flat files. The two sides are considered prime sides.
- The remaining two sides are also filed for right angle (90^0) by using flat file according to required dimension of 48x48 mm^2.
- The work piece is checked for 90^0 on all four sides with help of a try square
- A thin layer of chalk is applied on the workpiece and allowed to dry.
- Given dimension of the 'V' Cutting are marked with help of Vernier height gauge carefully.
- Using dot punch, dots are punched along the above marked lines by using hammer.
- Punch marks are made by keeping the dot punch inclined at 60^0 and they are filed off later. The spacing between the adjusant punch marks should be at least 6 mm.
- 'V'cut are made on the workpiece at marked locations at a medium speed
- The rough surface resulting from hacksaw cutting is filed for required dimensions for right angles(90°) with the help of flat files. (Rough, Medium and smooth)
- When filing, care is taken that half of the punch mark is retained on the work piece.
- The sharp corner of the 'V' shape is filed with the help of triangular file.
- While filing, the edge surface of the work piece are checked frequently for perpendicular and parallelism with the help of a try square.

Conclusion:

'V' Cutting is made as per the required dimensions.

Video Suggestions:

Tittle	Link
V Cutting	**https://youtu.be/hhOIRbEd9D8**

Simple Assessment:

Questions and answer

1. Steel rule is a …… measuring tool.
2. The caliper used for measuring the width of a slot is ……
3. Surface plate is made up of ……
4. Micrometer works on the principles of ……..
5. Try square is used to check up an angle of……..

Answer

1) Direct 2) Inside caliper 3) Cast iron 4) Nut &Bolt 5) 90^0

XII BME_English version Practicals.indd 161 04-02-2023 18:08:01

PRACTICAL 04

FACING & PLAIN TURNING

OBJECTIVE

To machine a flat surface on the face of the given round rod (Facing) and to perform plain turning operation to produce a cylindrical part of given dimensions by using a lathe.

OPERATIONS/EXERCISES COVERED UNDER THE PROJECT

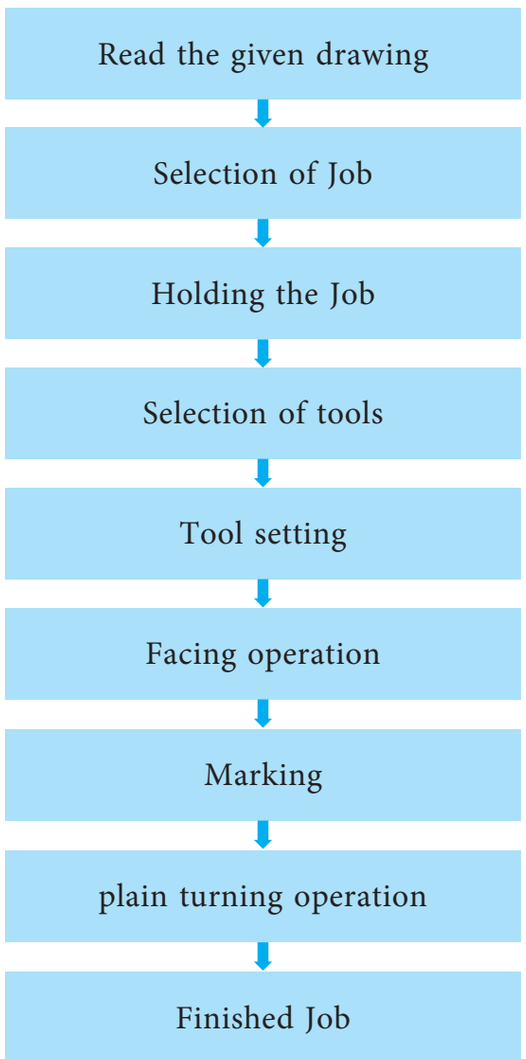

XII BME_English version Practicals.indd 162 04-02-2023 18:08:01

TOOLS AND EQUIPMENT REQUIRED

Section/Activity title	S.No	Name of the tools/ equipment	Specification	Quantity
Selectionn of cutting tools	1	Facing tool	10mm-12mm	1No.
	2	Plain turning tool	10mm-12mm	1No.
Setting tools	3	Surface gauge	Based on usage	1No.
	4	Chuck key	Based on chuck	1No.
	5	Tool holder	Based on lathe	1No.
Measuring Tools	6	Steel rule	300mm	1No.
	7	Inside caliper	150mm	1No.
	8	Outside caliper	150mm	1No.
	9	Vernier caliper	150mm	1No.
Finishing tool	10	Smooth file	300mm	1No.

Drawings:

(i) Given Material

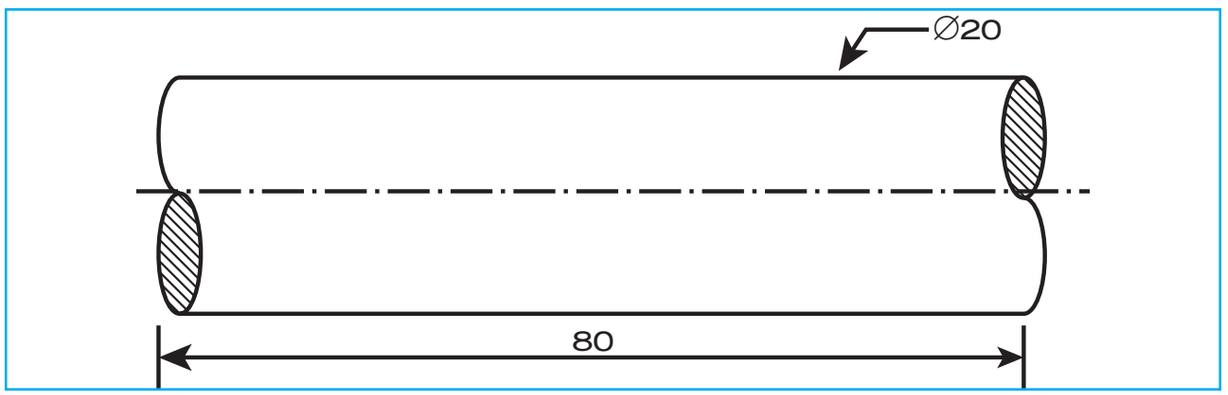

(ii) Facing

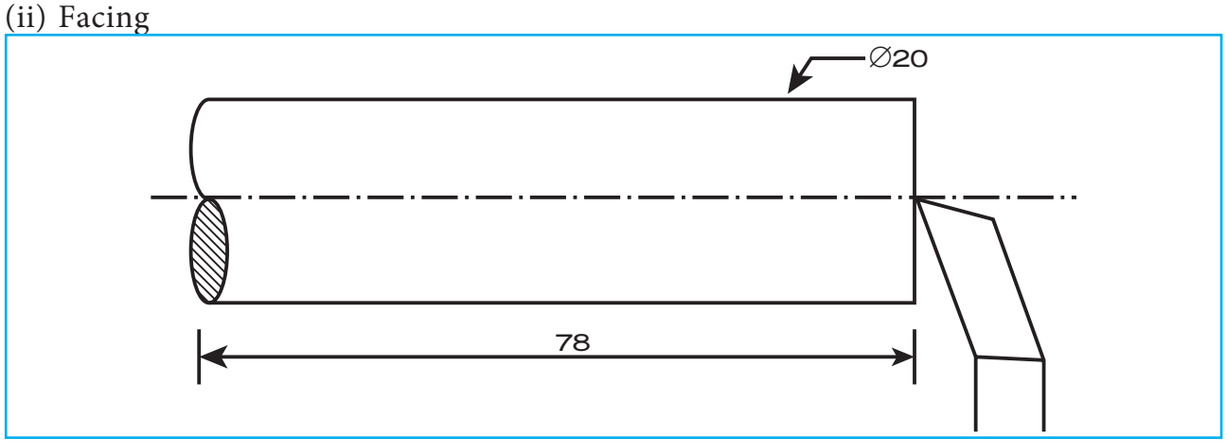

XII BME_English version Practicals.indd 163 04-02-2023 18:08:02

(iii) Plain Turning

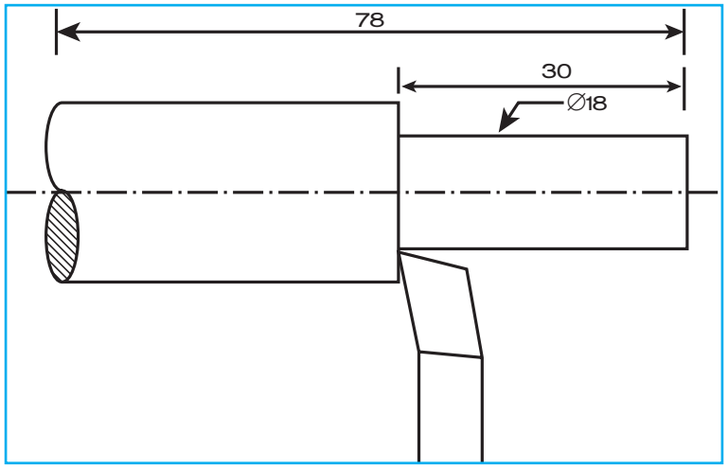

All Dimensions are in mm
Scale: Not to Scale

Tool setting

A facing tool and a plain turning are mounted on the toolpost and their cutting edges are set exactly aligned to the axis of the lathe spindle. The compound rest is set at 0^0 mark.

Holding of the work

The metal piece to be machined is held in the chuck of the lathe. Surface gauge is used to check whether the work is held aligning with the lathe axis.

Facing operation

The facing tool is mounted on the toolpost. The lathe is switched on the feed is given by the cross -slide perpendicular to the lathe axis. A flat surface on the face of the workpiece is generated.

Marking

Marking is done on the workpiece as per the given diagram.

XII BME_English version Practicals.indd 164 04-02-2023 18:08:02

Procedure

- The plain turning tool mounted on the tool post. The cross-slide is adjusted for required depth of cut and the lathe is switched on. The feed is given by to move the carriage parallel to the required lathe axis.
- The above process is repeated until the required diameter is obtained. This is done by gradually moving the cross-slide after each cut.
- During the process, the diameter of the work is checked with the help of outside caliper.
- Finishing tool is used to obtain accurate dimensions of length and diameter.

Conclusion

The finished piece of work is sent for inspection after the machining is over.

Assessment

1. Four way tool post is known as ----------
2. For facing operation the tool moves ----------to the axis of the lathe
3. For straight turning the tool moves ---------- to the axis of the lathe
4. ---------- is used for centring the cylindrical work piece in a lathe chuck.
5. ---------- is used to obtain accurate dimensions of length and diameter.

Answer

1) Turret tool post. 2) perpendicular 3) parallel

4) Surface gauge 5) Finishing tool

Video Suggestion

Tittle	Link
Facing and plain turing	**https://youtu.be/LeTjT8WGI-w**

XII BME_English version Practicals.indd 165 04-02-2023 18:08:02

PRACTICAL 05

STEP TURNING AND CHAMFERING

OBJECTIVE

To perform step turning and chamfering operations to produce a cylindrical part of given dimensions.

OPERATIONS/EXERCISES COVERED UNDER THE PROJECT

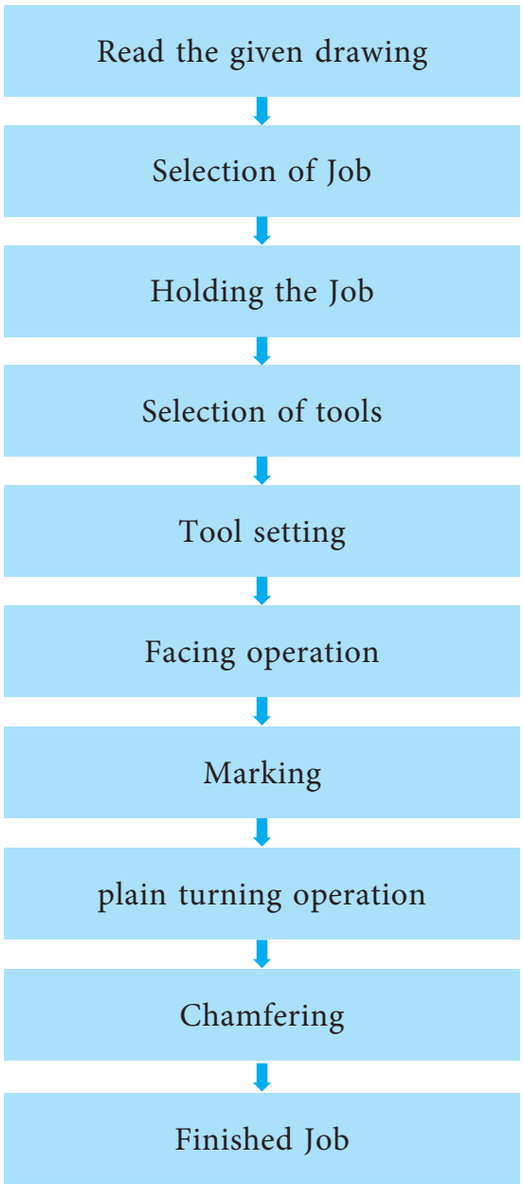

XII BME_English version Practicals.indd 166 04-02-2023 18:08:02

TOOLS AND EQUIPMENT REQUIRED

Section/Activity title	S.No	Name of the tools/ equipment	**Specification**	Quantity
Selectionn of cutting tools	1	Facing tool	10mm-12mm	1No.
	2	Plain turning tool	10mm-12mm	1No.
Setting tools	3	Surface gauge	Based on usage	1No.
	4	Chuck key	Based on chuck	1No.
	5	Tool holder	Based on lathe	1No.
Measuring Tools	6	Steel rule	300mm	1No.
	7	Inside caliper	150mm	1No.
	8	Outside caliper	150mm	1No.
	9	Vernier caliper	150mm	1No.
Finishing tool	10	Smooth file	300mm	1No.

Drawings :

Given Dimensions

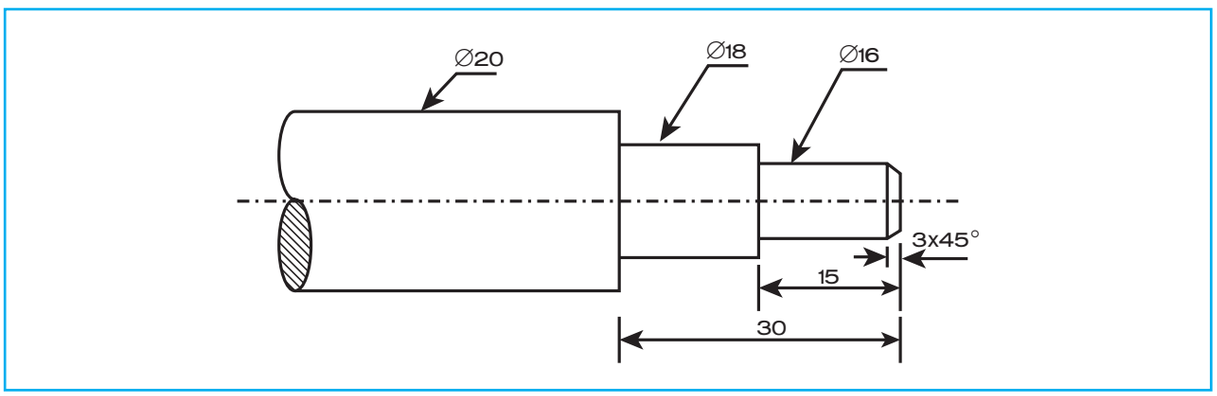

Given Material

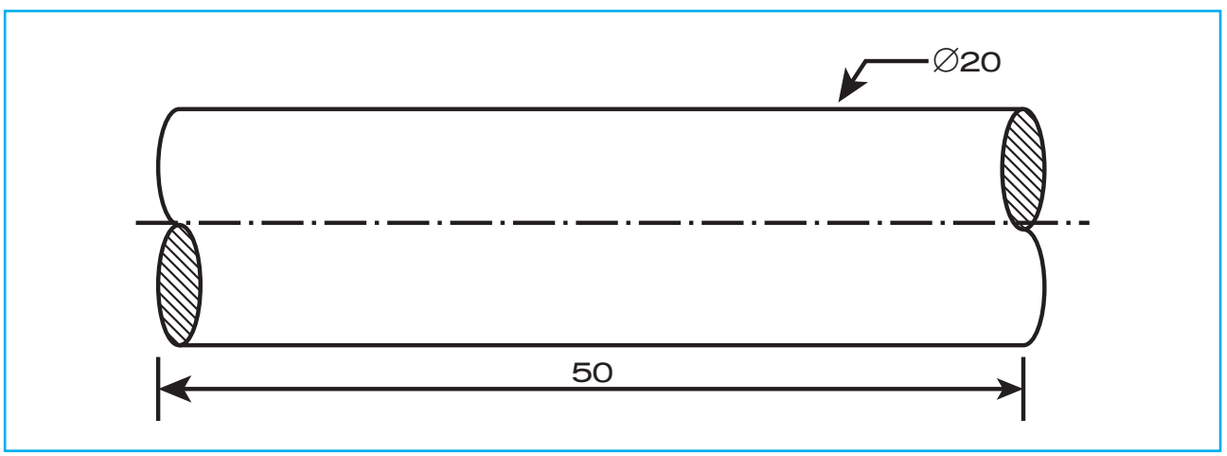

XII BME_English version Practicals.indd 167 04-02-2023 18:08:02

Step I

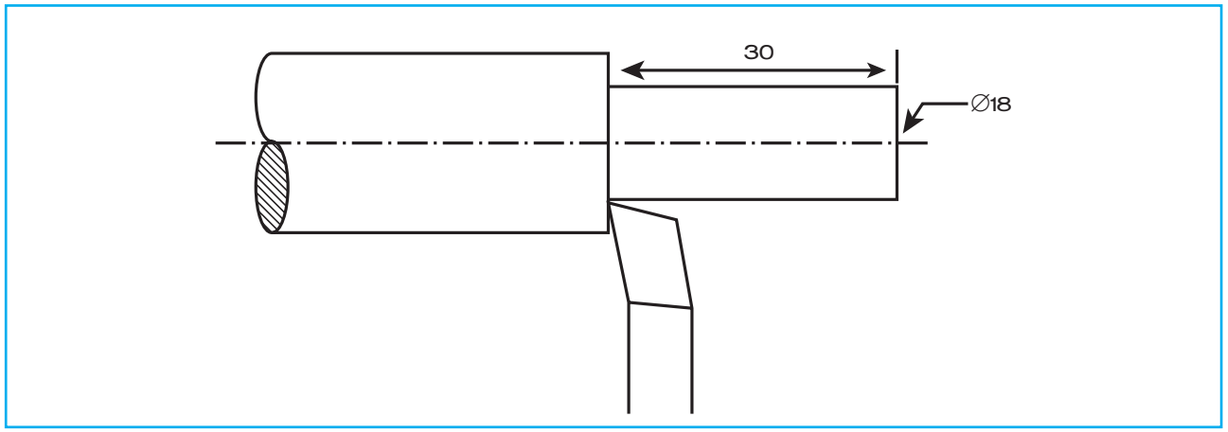

Step II

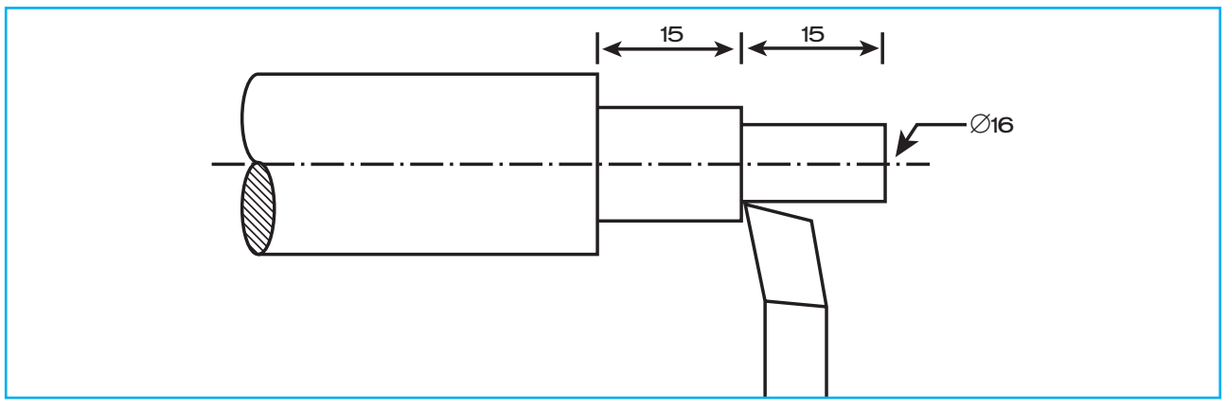

Step III

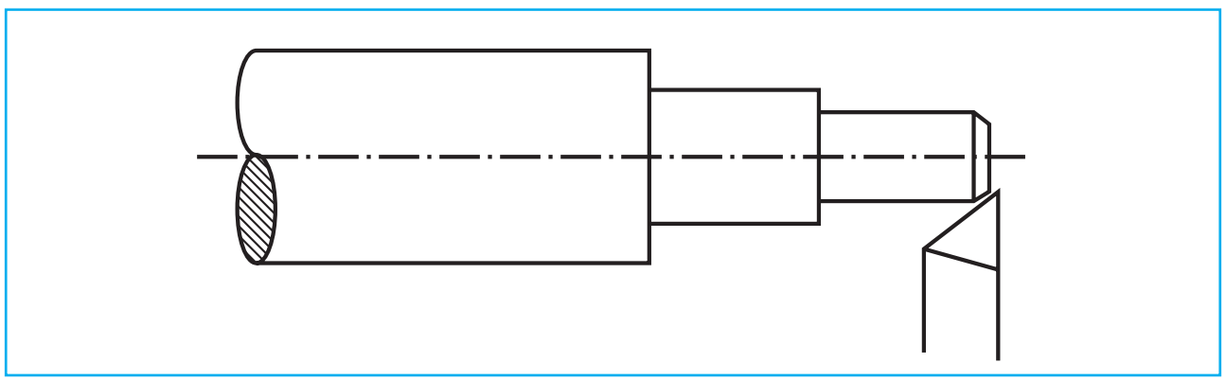

Tool setting

A facing tool and a plain turning are mounted on the toolpost and their cutting edges are set exactly aligned to the axis of the lathe spindle. The compound rest is set at 0° mark.

Holding of the work

The metal piece to be machined is held in the chuck of the lathe. Surface gauge is used to check whether the work is held aligning with the lathe axis.

XII BME_English version Practicals.indd 168 04-02-2023 18:08:02

Facing operation

The facing tool is mounted on the toolpost. The lathe is switched on the feed is given by the cross -slide perpendicular to the lathe axis. A flat surface on the face of the workpiece is generated.

Marking

Marking is done on the workpiece as per the given diagram.

Procedure

- The plain turning tool mounted on the tool post. The cross-slide is adjusted for required depth of cut and the lathe is switched on. The feed is given by to move the carriage parallel to the required lathe axis.
- The above process is repeated until the given larger diameter is obtained. The length should be equal to the sum of the lengths of larger and smaller diameter.
- When the larger step of given diameter is obtained, the tool is again fed parallel to the lathe axis to the given length of smaller step. Depth of cut is gradually given by the cross-slide to get the smaller step of required length and diameter.
- During this process, the dimensions of the work are checked with the help of outside caliper and inside calipers.
- Finishing tool is used to obtain accurate dimensions of length and diameter.

Chamfering

The chamfering tool (form tool) is set at the work at the required angle. Feed is given to the tool by operating the cross-slide to perform chamfering.

Conclusion

The finished piece of work is sent for inspection after the machining is over.

Assessment

1. --------is the dimension of chamfering in the given drawing
2. Carriage moves ----------to the lathe axis
3. ---------- tool is used for chamfering
4. For straight or plain turning compound rest is set at --------degree
5. Depth of cut is given by operating the----------

Answer

1) 3×45° 2) parallel 3) Form tool 4) 0° 5) cross slide

Video suggestion

Tittle	Link
Facing and plain turing	**https://youtu.be/LeTjT8WGI-w**

XII BME_English version Practicals.indd 169 04-02-2023 18:08:03

PRACTICAL 06

DRILLING AND COUNTER SINKING

Objective:

To drill hole and make counter – sinking by using the counter – sink drill bit given workpiece

Operations Covered under the Practical

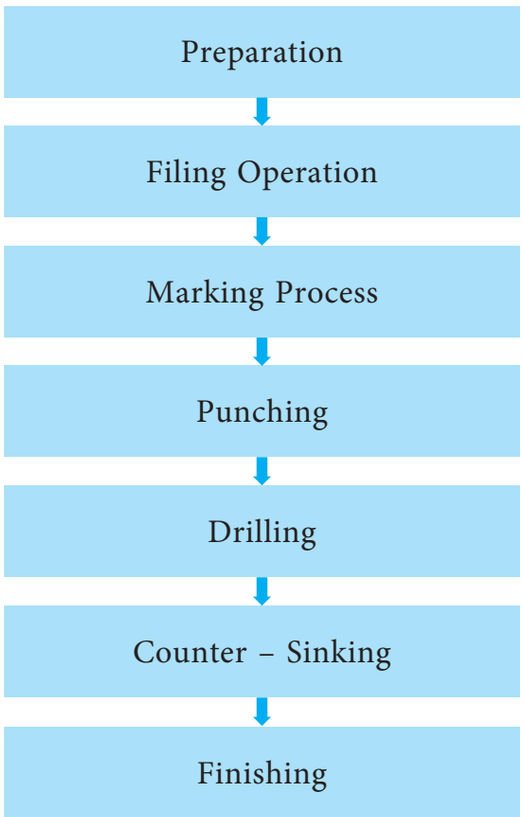

Given Material Specification:

Name of the Material	Dimension
Mild Steel plate	50mm X 50mm X 6mm or 50mm X 50mm X 8mm

XII BME_English version Practicals.indd 170 04-02-2023 18:08:03

Tools and Materials Required:

Section / Activity Title	S. No	Name of the tools/ Equipment's	Specification	Quantity
Preparation	1.	Steel Rule	One feet	1
	2.	Try – Square	½ Feet Scale	1
	3.	Flat file - (Rough)	12 Inch	1
	4.	Flat file - (Smooth)	12 Inch	1
	5.	Bench vise	No. 4	1
	6.	Jenny calliper	6"	1
Marking and Punching	7.	Ball – Peen Hammer	Face diameter 15/8 Inch Head wt: 32 oz	1
	8.	Centre punch	8X100mm Point angle 60°	1
	9.	Scriber	Point angle 12° (or) 15° Length 150 mm	1
	10.	Coloured chalk	blue colour	2
Drilling	11.	Sensitive drilling Machine	Bench type	1
	12.	Drill Chuck and key	Tapered Mount type, size: 13mm	1
	13.	Drill bits	dia 6 mm, dia 8mm, dia 10mm	1
	14.	Drift key	Reduced shank type size 2.4 mm	1
Counter sinking	15.	Counter – sink drill bit	60° or 82° (or) 90° (engagement angle)	1
Finishing	16.	Gauges (for checking counter – sink process)	Di-angle gauge	1

XII BME_English version Practicals.indd 171 04-02-2023 18:08:03

VI. Figures

1. Given Material

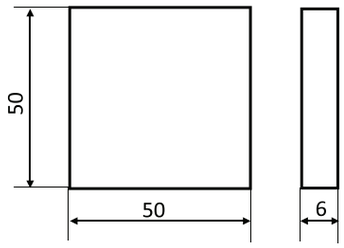

2. Filing two adjacent sides at 90°

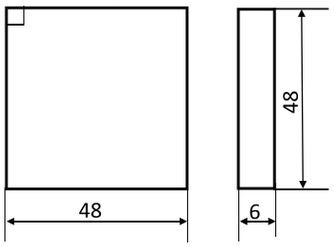

3. Marking and punching

4. Finished Job

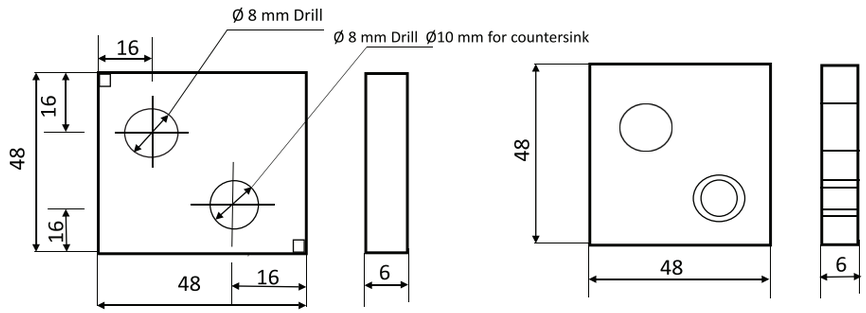

All Dimensions are in mm
Scale: NTS

3D Drawings

Drilling

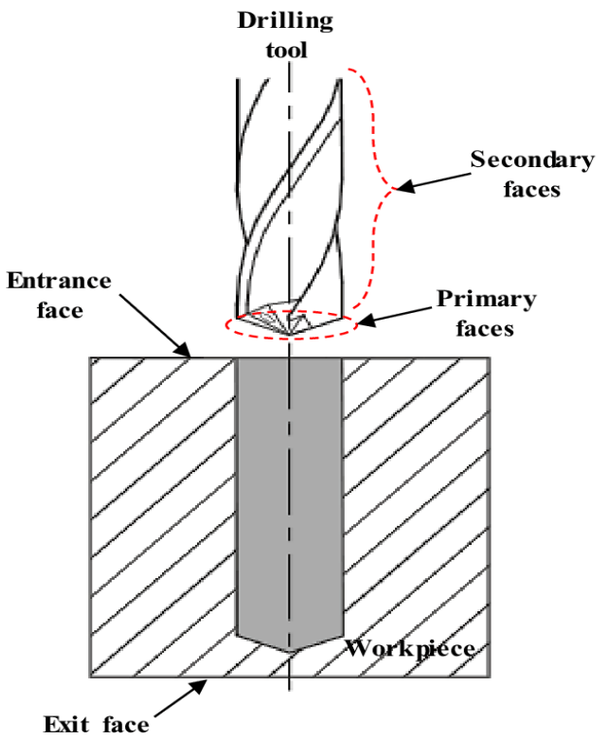

XII BME_English version Practicals.indd 172 04-02-2023 18:08:03

Counter sinking

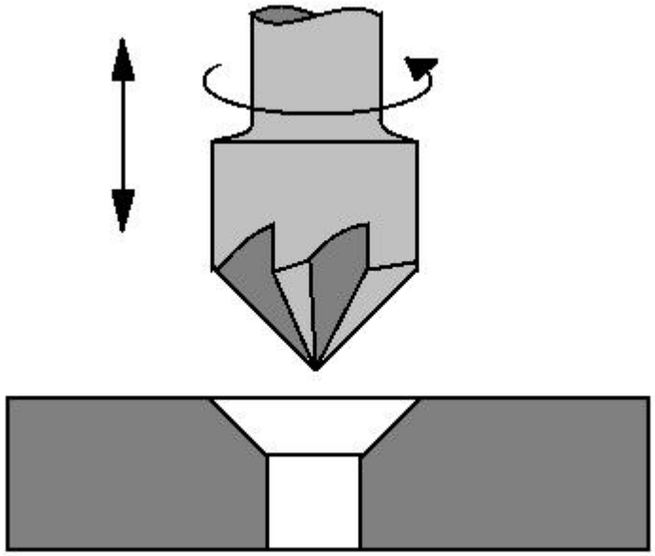

Finished Job

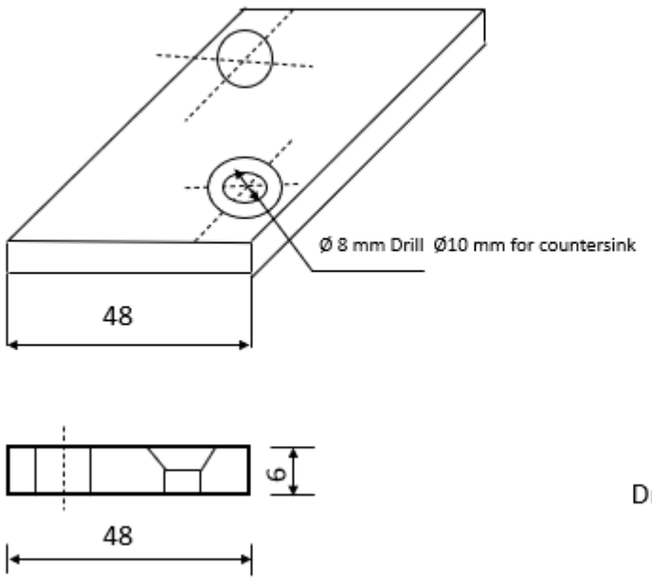

Drilling and counter sinking

All Dimensions are in mm
Scale: Not to Scale

XII BME_English version Practicals.indd 173 04-02-2023 18:08:03

Procedure

1. Preparation

a. Check the initial dimensions of the given work piece using a steel ruler

B. Fix the job on a bench vise and file the two adjacent sides using a flat file (rough and smooth) to form right angle. Again, file remaining two sides at right angle.

c. Check for the perpendicularity with try – square

Marking and punching:

a. Apply chalk on the worksurface.

b. Measure 8 mm and 10 mm using a jenny calliper from the steel rule

c. Transfer the measured dimensions to the workpiece with an edge 16mm

d. Draw lines along the dimensions on the work piece with scriber

e. Make dots inner centre point using centre punch

Drilling:

a. Place the work piece on the drilling machine platform or vise.

b. Using a drilling machine, selected drill bits fitted into the drill spindle and make two holes on the dotted place made by centre punch

c. Pour some oil for smooth drill and drill the work piece properly by adjusting the pilot.

d. Repeat the steps twice for better finishing.

Counter – sinking.

a. Remove the drill bit and fix the selected counter – sink tool (60° or 82°) in the drill chuck and fit into the spindle

b. The feed is given to the spindle and fed to the work piece with a speed of 25% less than drilling process

c. The counter – sink tool form a conical surface on the top of the hole

Finishing:

a. Finally, the conical surface is checked with di-angle gauge and check the taper angle.

Conclusion:

The required hole and counter – sink on the hole with proper measurements have been obtained using drilling and counter – sinking techniques

XII BME_English version Practicals.indd 174 04-02-2023 18:08:03

Applications:

i) Fitting industries

ii) Fasteners industries

iii) Automobile industries

Simple Assessments:

1. The groove formed in a drill bit is called _____
2. Drills are made of _____
3. Drill chuck is used to hold _____ drills
4. Mention any two types of drilling machines.
5. Which Machine is used to drill holes and form internal threads in a work piece.

Answer:

1. Flute
2. High Speed steel
3. Straight shank
4. Portable drilling machine, Sensitive drilling machine
5. Radial drilling machine

Video Suggestions

S.No	Title / Purpose	Link
1.	Drilling process	https://en.m.wikipedia.org https://youtu.be/k964-Ci_Qxs
2.	Drill bit types	https://civiconcepts.com
3.	Counter sinking operation	https://engineering.myindialist.com https://youtu.be/WXqJ-0oXt2k
4.	Counter sink drill specifications	https://www.globalspec.com

XII BME_English version Practicals.indd 175 04-02-2023 18:08:03

PRACTICAL 07

TAPPING AND DIEING

OBJECTIVE

To make Internal threads on the given mild steel plate and make External threads on the given cylindrical mild steel round rod.

Operations covered under the practical process:

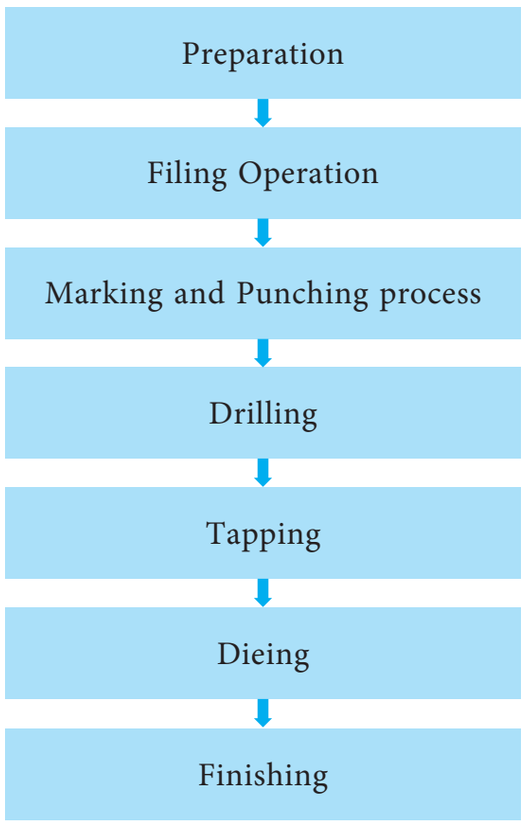

Given Material Specification:

Name of the Material	Dimension
Mind Steel Plate	50 mm x 50 mm x 8 mm
Mind steel round rod	Dia 8 mm x 50 mm Length

XII BME_English version Practicals.indd 176 04-02-2023 18:08:03

Tools and Equipment's Required

Section/ Activity Title	S. No	Name of the tools/ Equipment's	Specification	Quality
Preparation	1.	Bench wise	4" Size, Jaw width 100 mm	1
	2.	Steel rule	Length 300 mm	1
	3.	Try – square	70x50x8.5 mm	1
	4.	Flat file (Rough)	12" Length Double cut file	1
	5.	Flat file (Smooth)	12" Length Double cut file	1
Marking and punching	6.	Colour chalk	8x10 mm Persian blue	2
	7.	Jenny calliper	6" stainless-steel	1
	8.	Scriber	tip diameter 4 mm length = 150 mm	1
	9.	Ball - Peen Hammer	Head Weight = 32oz Face dia 15/8"	1
	10.	Centre punch	Dia 8mm x 100 mm length	1
Drilling	11.	Sensitive drilling machine	Bench type max Drill size 15mm	1
	12.	Drill chuck and key	Tapered mount type size = 13 mm	1
	13.	Drill bits	Dia 6mm, Ø8.5mm	1
	14.	Drift Key	Reduced shank type. Size 2 to 4 mm	1
Tapping process	15.	Tap set	10 mm x 1.5 mm	1
	16.	Tap wrench	size – 2 Length 280 mm Adjustable	1
Dieing operation	17.	Die set	½" – HSS set	1
Finishing	18.	Thread pitch gauge	Length x width x height = 9.7 x 2.5x2 cm	1 set

XII BME_English version Practicals.indd 177 04-02-2023 18:08:03

Tapping Process

i) Given Material

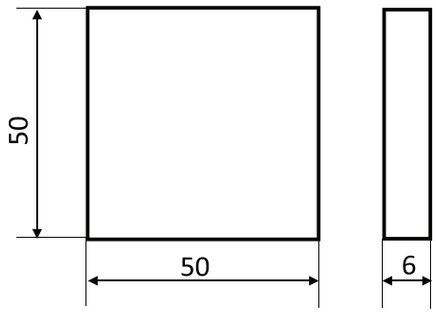

ii) Filing two adjacent sides at 90°

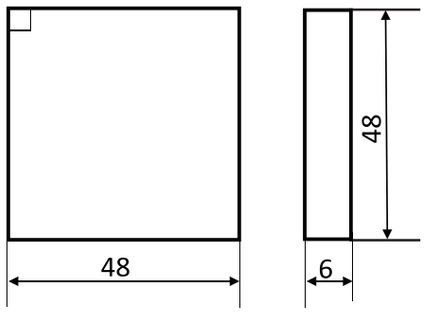

iii) Marking and punching

iv) Drilling and Tapping process (Finished product)

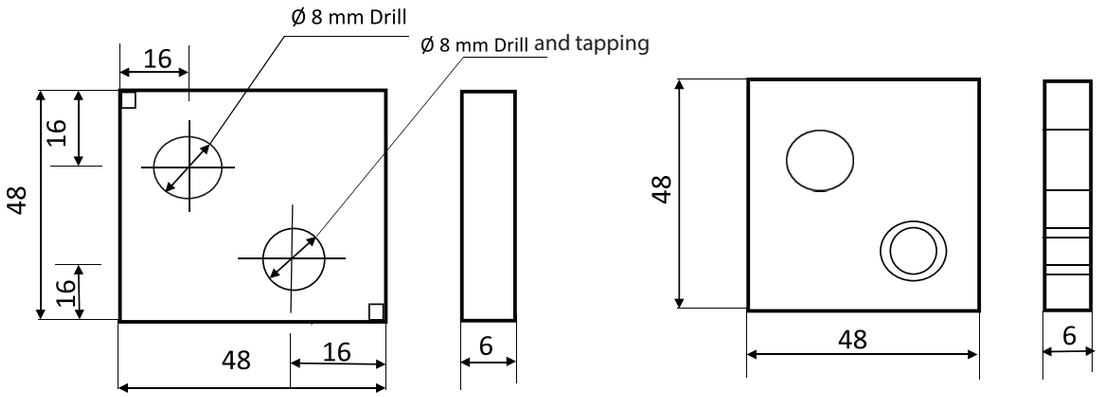

All Dimensions are in mm
Scale: NTS

Dieing Process

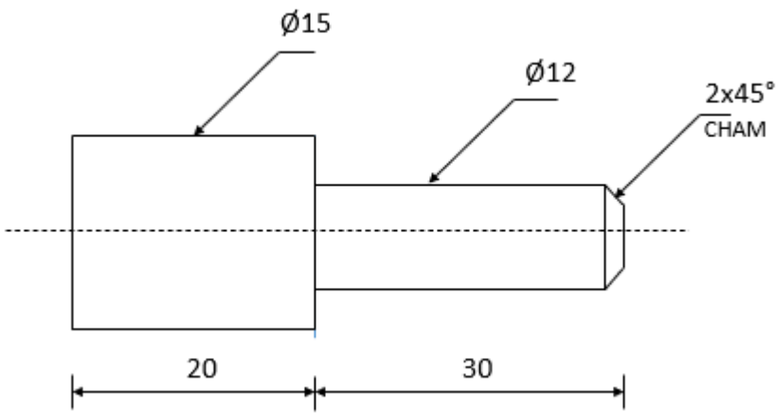

All Dimensions are in mm
Scale: Not to Scale

XII BME_English version Practicals.indd 178 04-02-2023 18:08:03

3D Drawings

Tapping

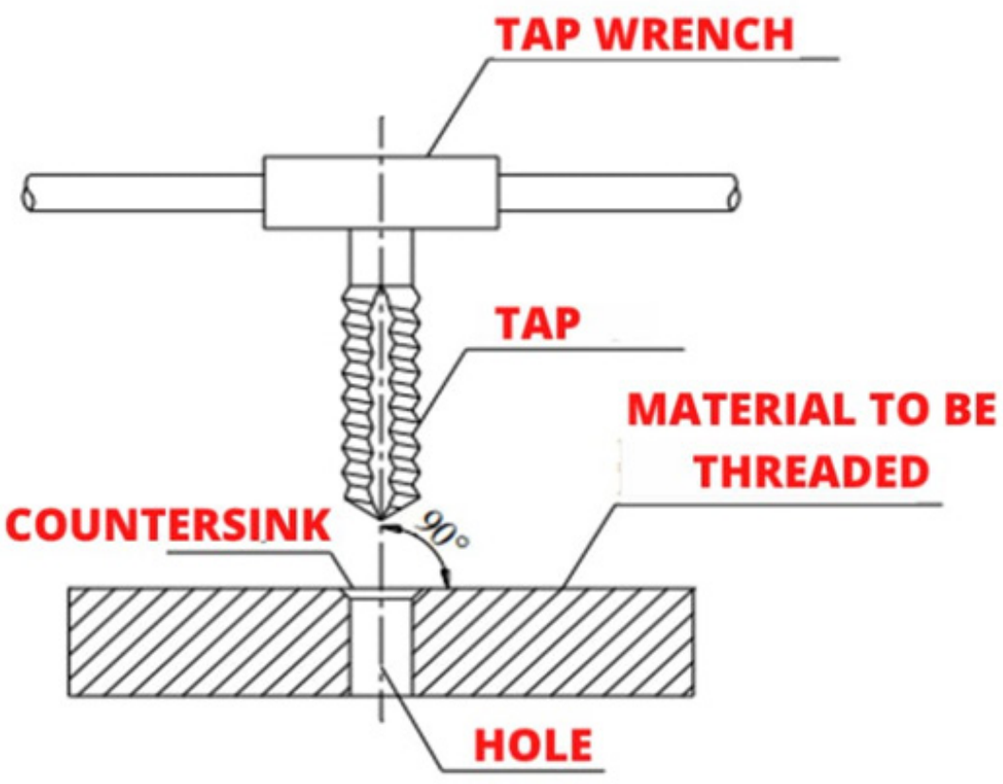

Dieing



XII BME_English version Practicals.indd 179 04-02-2023 18:08:03

Calculation for Tapping and dieing:

Tap Drill size 'D' = Tap size – pitch size (or) = T- 2d [T- Diameter of the TAP d – depth of thread]

For practical purpose: Tap drill size D = 0.8 T [T is the diameter of the tap]

Example: D = 10 – 1.5 = 8.5 mm

(or)

Drill size = 0.8 x 10 = 8 mm

Die set:

½" Die set used for making thread 10 – 15 mm diameter of the cylindrical rods (or) pipes.

Procedure for tapping operation:

1. Preparation
   a. Check the initial dimensions of the given work piece using a steel ruler
   b. Fix the job on a bench vise and file the two adjacent sides using flat file (Rough and smooth) to form right angle. Again, file the remaining two sides at right angle.
   c. Check for perpendicularity with try square.
2. Marking and punching:
   a. Apply chalk on the work piece.
   b. Measure 8 mm and 8.5 mm using a jenny calliper from the steel rule
   c. Transfer the measured dimensions to the work piece with an edge of 16 mm
   d. Draw lines along the dimensions on the work piece with scriber.
   e. Make dots inter centre point using centre punch.
3. Drilling:
   a. Place the workpiece on the drilling machine vise (or) platform
   b. Using a drilling machine, selected drill bits fitted into the drill spindle (or) drill chuck and make holes on the dotted place made by centre punch
   c. Pour some oil for smooth drill and drill the work piece properly by adjusting the pilot
   d. Repeat the steps twice for better finishing.
4. Tapping Process:
   a. Fix the work piece in the bench vise in such way that it should not move
   b. If necessary, add chamber to the hole before tapping
   c. Peck tap using the tap when First tap is placed on the hole at 90°. Then apply gentle pressure while turning the wrench a complete turn in then a half turn out. Peck tap to the desired depth and pour the coolant oil.
   d. Repeat the procedure. Then take the tapping tool second and third and use it carefully by rotating clockwise and anti clockwise.

Procedure for dieing process:

a. Wear personal protective equipment [ex: eye wear, Leather gloves]

b. Find the diameter of the rod. The rod diameter should be roughly the same for the entire length.

XII BME_English version Practicals.indd 180 04-02-2023 18:08:03

c. Find the thread court the corresponds to rod diameter.

d. Select die from the kit that corresponds to the initial diameter of the rod.

e. Assess the rod to ensure the end is suitable for threads.

f. Create a chamber on the end of the rod that will receive threads.

g. Secure the rod in a bench vice with the end that will have threads pointing towards the ceiling.

h. Insert the die into the stock

i. Set die stock on the end of rod and twist in direction of the desired threads to start threading the die into the rod.

j. Ensure the die is perpendicular to the rod and force is applied downward while rotating the die

k. Turn stock in direction to desired thread.

l. Turn stock and full turn, then back of Half turn to break off chips.

m. Remove the die once desired thread length is achieved down the rod.

n. Wipe the threads and die using a cloth and test newly created threads by trying a nut that matches the thread.

Finishing:

Using 10 mm screw (or) bolt and nut check the accuracy of the tapping and dieing operation

Conclusion:

The required hole, tapping and dieing on the hole with proper measurements have been obtained using drilling, tapping and dieing techniques.

Applications:

i. Fitting Industries

ii. Fasteners Industries

iii Automobile industries

Simple Assessments:

1. The tool used for cutting internal thread is _____
2. The tool used for cutting external thread is _____
3. The formula used for calculating Tap drill size is _____
4. The two types of shank of the drill bits are _____
5. Taps and dies are made off _____ material

Answer.

1) Tap

2) Die

3) D = T- 2d

4) Straight Shank drill bit, taper shank drill bit

5) High speed steel

Video suggestions

Tittle	Link
Tapping	**https://youtu.be/vmSLjwuiXac**
Dieing	**https://youtu.be/SpN7N_yZRU4**

XII BME_English version Practicals.indd 181 04-02-2023 18:08:03

PRACTICAL 08

LAP JOINT

OBJECTIVE

To make Lap-joint using the two given same metal workpieces in arc welding

OPERATIONS/EXERCISES COVERED UNDER THE PROJECT

Checking

↓

Edge preparation

↓

Wearing safety equipments

↓

Workpiece positioning

↓

Electrode positioning

↓

Welding

↓

Finishing

Material Required

Mild Steel Plate 100 x 60 x 8 mm – 02 Nos

Tools and Equipment required

Section/ Activity Title	S.No	Name of the tools/ Equipment	Specification	Quantity
Lap welding	1	AC Transformer	Input supply 220v Current 43.5 amp	1
	2	Electrode holder	Open type	1
	3	Electrode	Dia 6 to 12 mm Length 450mm	1

XII BME_English version Practicals.indd 182 04-02-2023 18:08:04

Safety	4	Hand shield	83X108 mm	1
	5	Goggles	L X W X H : 11x9x4 cm	1
	6	Apron	L X W X T : 900x600x3 mm	1
	7	Gloves	Length 11-15 inches Width @ opening 5 ½ - 6 ½ inches	1 pair
Finishing	8	Chipping hammer	Weight 8.5 kg handle type	1
	9	Wire brush	L X W X H : 290x30x15	1
	10	Flat file	Length 12 inch double cut rough file	1

Drawings

GivenMaterial size (Two pieces)

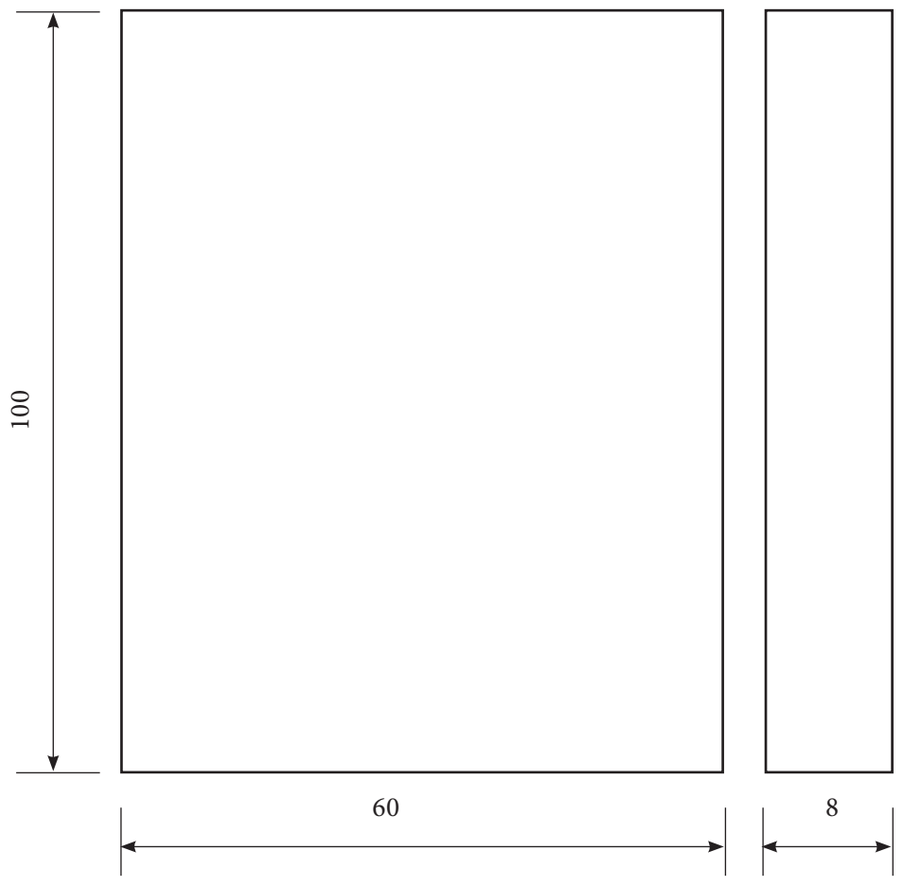

XII BME_English version Practicals.indd 183 04-02-2023 18:08:04

Finished Job

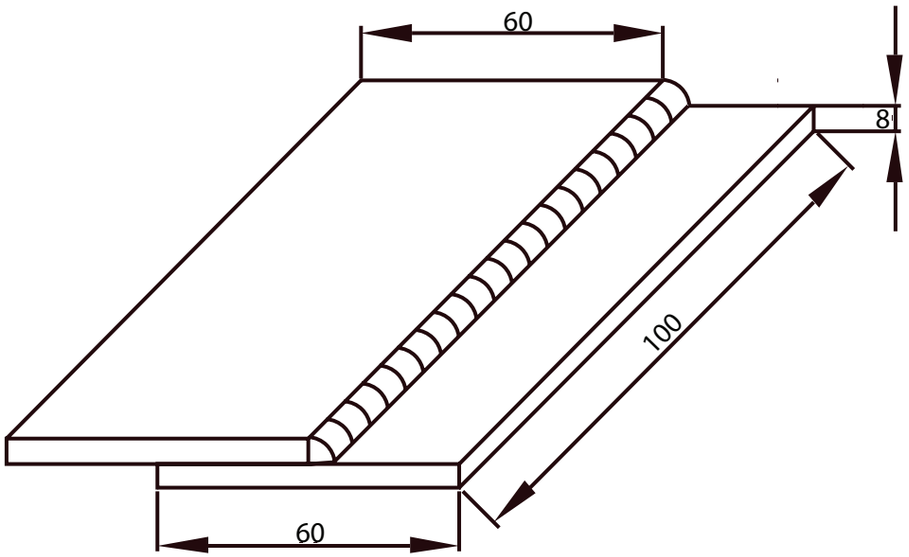

All Dimensions are in mm
Scale: Not to Scale

Procedure

1. The given workpieces are thoroughly cleaned and the edges are filed
2. The electrode is held in an electrode holder and ground clamp is clamped to the welding plates and the power is supplied.
3. The workpieces are positioned on the table to form a "Lap-Joint"
4. The tag weld is done on the both ends of joining plates to avoid the movement of workpieces during welding
5. The welding is carried throughout the length of the workpieces on both sides by maintaining 3 mm gap between plates and the welding rod
6. The welded joint portions are allowed for air cooling after the slag is removed
7. The welded joint portions are cleared by wire brush

Conclusion

Thus the required "Lap-Joint" is made by Arc welding process.

Simple Assesment

1. The pressure of oxygen in the cylinder of gas welding is.....
2. The pressure of acetylene in the cylinder of gas welding is.....
3. The working pressure of oxygen in gas welding is.....
4. The working pressure of acetylene in gas welding is.....

Answers

1) 125 kg/cm^2 2) 16kg/cm^2 3) 1kg/cm^2 4) 0.15 kg/ cm^2

Video suggestions:

S.No	Tittle	Link
1	Lap joint	https://youtu.be/6A35U8zW0Pg

XII BME_English version Practicals.indd 184 04-02-2023 18:08:04

PRACTICAL 09

BUTT-JOINT

OBJECTIVE

To make Butt-joint using the two given same metal workpieces in arc welding

OPERATIONS/EXERCISES COVERED UNDER THE PROJECT

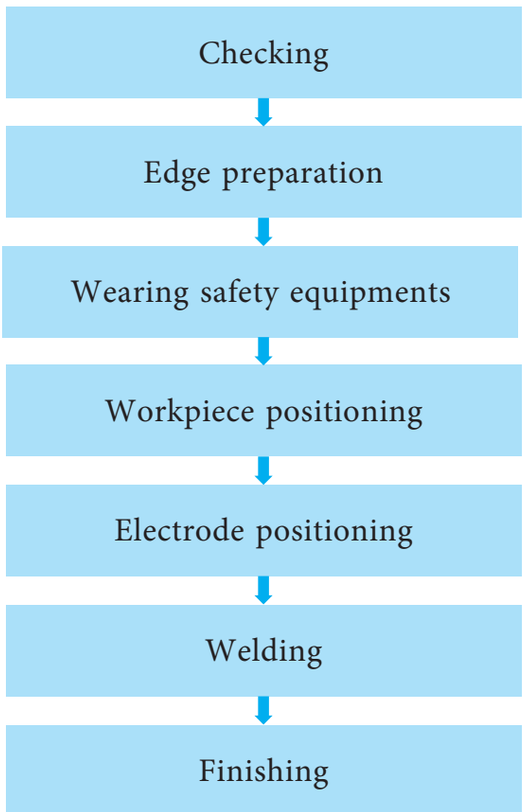

Material Required

Mild Steel Plate 80 x 40 x 8 mm – 02 Nos

Tools and Equipment required

Section/ Activity Title	S.No	Name of the tools/ Equipment	Specification	Quantity
Butt welding	1	AC Transformer	Input supply 220v Current 43.5 amp	1
	2	Electrode holder	Open type	1
	3	Electrode	Dia 6 to 12 mm Length 450mm	1

XII BME_English version Practicals.indd 185 04-02-2023 18:08:04

Safety	4	Hand shield	83X108 mm	1
	5	Goggles	L X W X H : 11x9x4 cm	1
	6	Apron	L X W X T : 900x600x3 mm	1
	7	Gloves	Length 11-15 inches Width @ opening 5 ½ - 6 ½ inches	1 pair
Finishing	8	Chipping hammer	Weight 8.5 kg handle type	1
	9	Wire brush	L X W X H : 290x30x15	1
	10	Flat file	Length 12 inch double cut rough file	1

Drawings

GivenMaterial size (Two pieces)

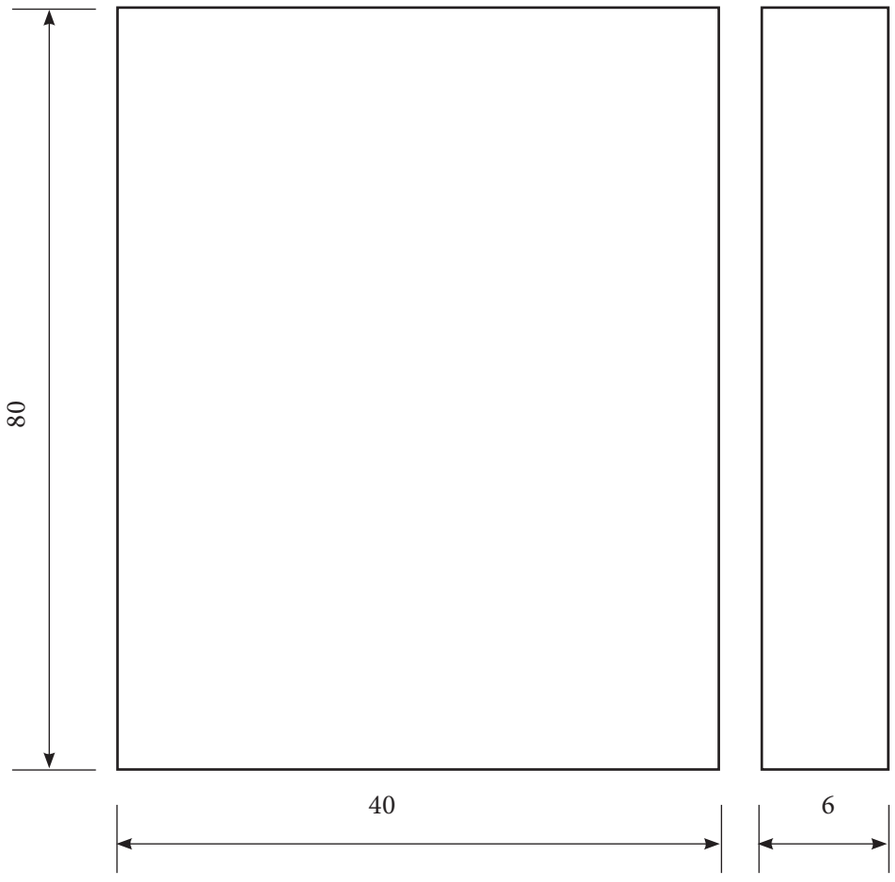

XII BME_English version Practicals.indd 186 04-02-2023 18:08:04

Finished Job

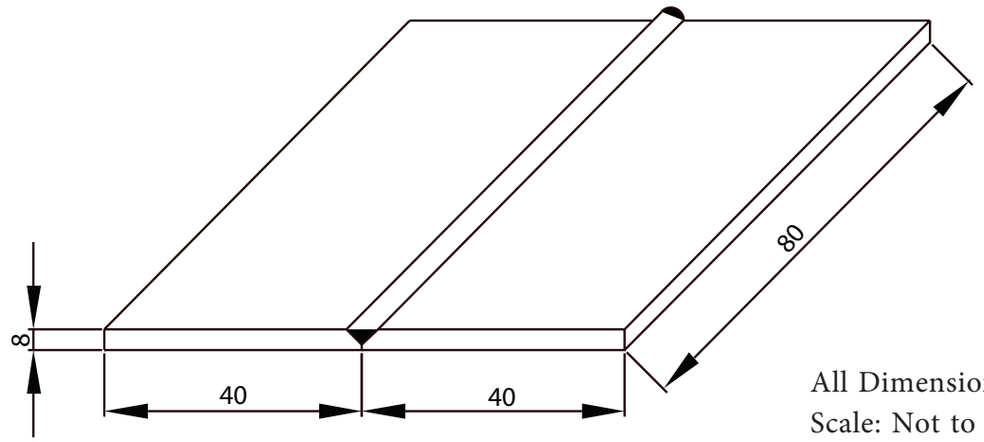

All Dimensions are in mm
Scale: Not to Scale

Procedure

1. The given workpieces are thoroughly cleaned and the edges are filed
2. The electrode is held in an electrode holder and ground clamp is clamped to the welding plates and the power is supplied.
3. The workpieces are positioned on the table to form a "Butt-Joint"
4. The tag weld is done on the both ends of joining plates to avoid the movement of workpieces during welding
5. The welding is carried throughout the length of the workpieces on both sides by maintaining 3 mm gap between plates and the welding rod
6. The welded joint portions are allowed for air cooling after the slag is removed
7. The weld joint portions are cleared by wire brush

Conclusion

Thus the required "Butt-Joint" is made by Arc welding process.

Simple Assesment

1. The color of oxygen cylinder in gas welding is .....
2. The color of acetylene cylinder in gas welding is.....
3. The color of the hose from the oxygen cylinder in gas welding is .....
4. The color of the hose from the acetylene cylinder in gas welding is .....

Answers

1.Black 2.Maroon 3.Black 4.Red

Video suggestions :

S. No	Tittle	Link
1	Butt joint	**https://youtu.be/3-ebx3hWu0Q**

XII BME_English version Practicals.indd 187 04-02-2023 18:08:04

PRACTICAL 10

T-JOINT

OBJECTIVE

To make T-joint using the two given same metal workpieces in arc welding

OPERATIONS/EXERCISES COVERED UNDER THE PROJECT

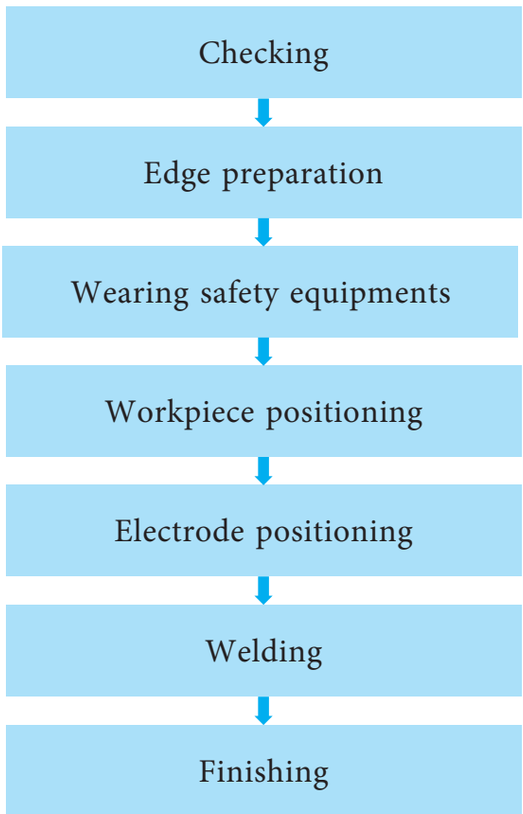

Material Required

Mild Steel Plate 100 x 60 x 8 mm – 02 Nos

XII BME_English version Practicals.indd 188 04-02-2023 18:08:04

Tools and Equipment required

Section/ Activity Title	S.No	Name of the tools/ Equipment	Specification	Quantity
T welding	1	AC Transformer	Input supply 220v Current 43.5 amp	1
	2	Electrode holder	Open type	1
	3	Electrode	Dia 6 to 12 mm Length 450mm	1
Safety	4	Hand shield	83X108 mm	1
	5	Goggles	L X W X H : 11x9x4 cm	1
	6	Apron	L X W X T : 900x600x3 mm	1
	7	Gloves	Length 11-15 inches Width @ opening 5 ½ - 6 ½ inches	1 pair
Finishing	8	Chipping hammer	Weight 8.5 kg handle type	1
	9	Wire brush	L X W X H : 290x30x15	1
	10	Flat file	Length 12 inch double cut rough file	1

Drawings

GivenMaterial size (Two pieces)

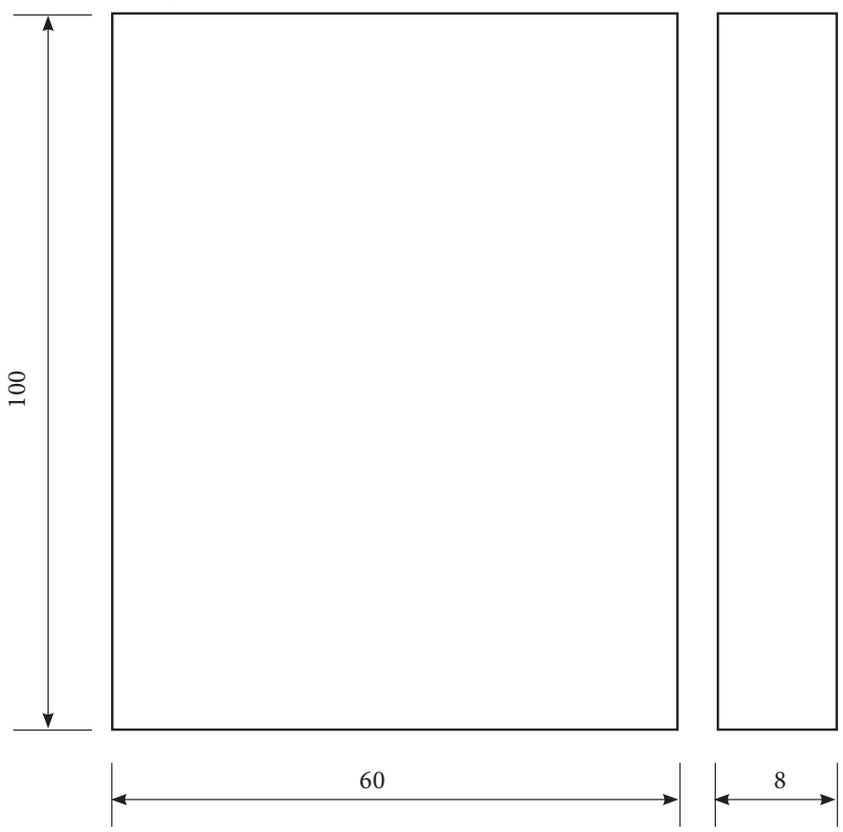

XII BME_English version Practicals.indd 189 04-02-2023 18:08:04

Finished Job

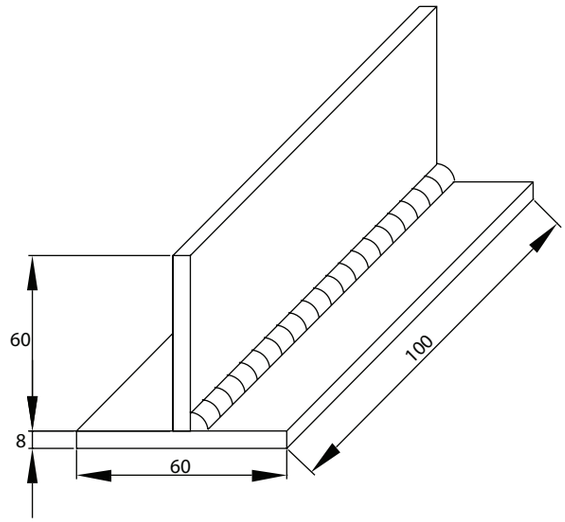

All Dimensions are in mm
Scale: Not to Scale

Procedure

1. The given workpieces are thoroughly cleaned and the edges are filed
2. The electrode is held in an electrode holder and ground clamp is clamped to the welding plates and the power is supplied.
3. The workpieces are positioned on the table to form a "T-Joint"
4. The tag weld is done on the both ends of joining plates to avoid the movement of workpieces during welding
5. The welding is carried throughout the length of the workpieces on both sides by maintaining 3 mm gap between plates and the welding rod
6. The welded joint portions are allowed for air cooling after the slag is removed
7. The weld joint portions are cleared by wire brush

Conclusion

Thus the required "T-Joint" is made by Arc welding process.

Simple Assessment

1 ..... flame is obtained by supply of equal quantities of oxygen and acetylene.

2 .....flame is obtained by supplying more acetylene than oxygen.

3 .....flame is obtained by supplying more oxygen than acetylene.

4. The heat generated during arc welding is .....

Answers

1. Neutral
2. Carburising
3. Oxidising
4. 5000^0c - 6000^0c

Video Suggestions:

S.No	Tittle	Link
1	T-joint	**https://youtu.be/deHaqv7WX5I**

XII BME_English version Practicals.indd 190 04-02-2023 18:08:04

REFERENCES

1. *"Elements of Workshop Technology"* by S.K. Hajra choudhury and A.k.Hajra choudhury and Nirjhar Roy, Media promotors & publishers pvt. Ltd, Mumbai – 400 007.
2. *"Basic Mechanical Engineering"* by T.S. Rajan, New age International publishers, 3rd Edition.
3. *"Machine Tool Practices"* by Richard R. Kibbe and Roland O.Meyer, John.E.Neely, Werren.T. White, 8th Edition, publisher Name.Pearson/prentice Hall, upper saddle River, New Jersey, Columbus, ohio.
4. *'Welding'* by A.C. Davies cambridge low price Edition, 10th Edition.
5. *"Welding and welding Technology"* by Richard.L. Little, Mc Graw Hill Education (India) Privated Ltd, New Delhi.
6. *"Fundamentals of Hydraulic Engineering"* by Alan L.Prasuhn, Oxford Univercity press.
7. *"Pumps & Hydraulics"* by Rex Miller, Mark Richard Miller, Harry stewart published by wiley publishing Inc.
8. *"Hydraulics Laboratory Mannual"* by S.K. Likhi, New age International Publishers New Delhi – 110 002
9. *"Computer Numerical control Machining and Turning centers"* by Robert Quesada, published by pearson/prentice Hall, Upper saddle River, New Jersy, coloumbus, ohio.
10. *"Robotics and Industrial Automation"* by R.K. Rajput, s.chand & company Ltd, Ram Nagar, New Delhi – 110 055
11. *"Automation and Human performance theory and applications"* by Raja parasuraman and Mustapha Moulaua. Published by Lawrence Erlbaum Associates publishers Mahwah, New jersey.
12. *"Robotics"* by Ellen Thro published by Facts on File, Inc

XII BME_English version Practicals.indd 191 04-02-2023 18:08:04

Higher Secondary Class XII
Basic Mechanical Engineering - Theory & Practicals
List of Authors and Reviewers

Adviser & Expert

Dr. P. Kumar
Joint Director (Syllabus)
State Council of Education Research and Training Tamilnadu,
Chennai.

Domain Expert

Dr. P. Manivannan
Professor,
School of Aeronatical Science, Hindustan institute of Technology and Science
Kelambakkam, Chennai.

Reviewer

S. Rajendra Boopathy
Professor,
Department of Mechanical Engineering,
Central Workshop Division, Anna University,
Chennai.

Academic Co-ordinator

Dr. A. Ilangovan (State Awardee – 2018)
Assistant Professor,
State Council of Educational Research and Training,
Chennai.

K. Gomathi
Lecturer,
DIET, Tirur
Thiruvallur District.

P. Malarvizhi
BT Assistant,
State Council of Educational Research and Training,
Chennai.

Art and Design Team

Layout Designing and Illustration
Arockiam Felix, Chennai

Wrapper Design
Kathir Arumugam

Coordination
Ramesh Munisamy

Authors List

C. Ravivarman
('State Best Teacher' Awardee-2015)
Vocational Teacher,
Govt. Boys Hr. Sec. School,
Nattrampalli, Tirupattur District.

B. Prabakaran
Vocational Teacher,
Govt. Boys Hr. Sec. School,
Vandavasi, Thiruvannamalai District.

N. Palanivelu
Vocational Teacher,
Govt. Boys Hr. Sec. School,
Arni, Thiruvannamalai District.

R. Arumugam
Vocational Teacher,
Govt. Boys Hr. Sec. School,
Ondipudur, Coimbatore District.

A. Maduraimuthu
Vocational Teacher,
Govt. Boys Hr. Sec. School,
Magudanchavadi,
Salem District.

QR Code Management Team

R.M. Satheesh
State Coordinator Technical,
TN EMIS, Samagra Shiksha.

K.P. Sathya Narayana
IT Consultant,
TN EMIS, Samagra Shikaha

R. Arun Maruthi Selvan
Technical Project Consultant,
TN EMIS, Samagra Shiksha

This book has been printed on 80 G.S.M.
Elegant Maplitho paper.

Printed by offset at:

XII BME_English version Practicals.indd 192 04-02-2023 18:08:04

Notes

XII BME_English version Practicals.indd 193 04-02-2023 18:08:04

Notes

XII BME_English version Practicals.indd 194 04-02-2023 18:08:04

Notes

XII BME_English version Practicals.indd 195 04-02-2023 18:08:04

Notes

XII BME_English version Practicals.indd 196 04-02-2023 18:08:04